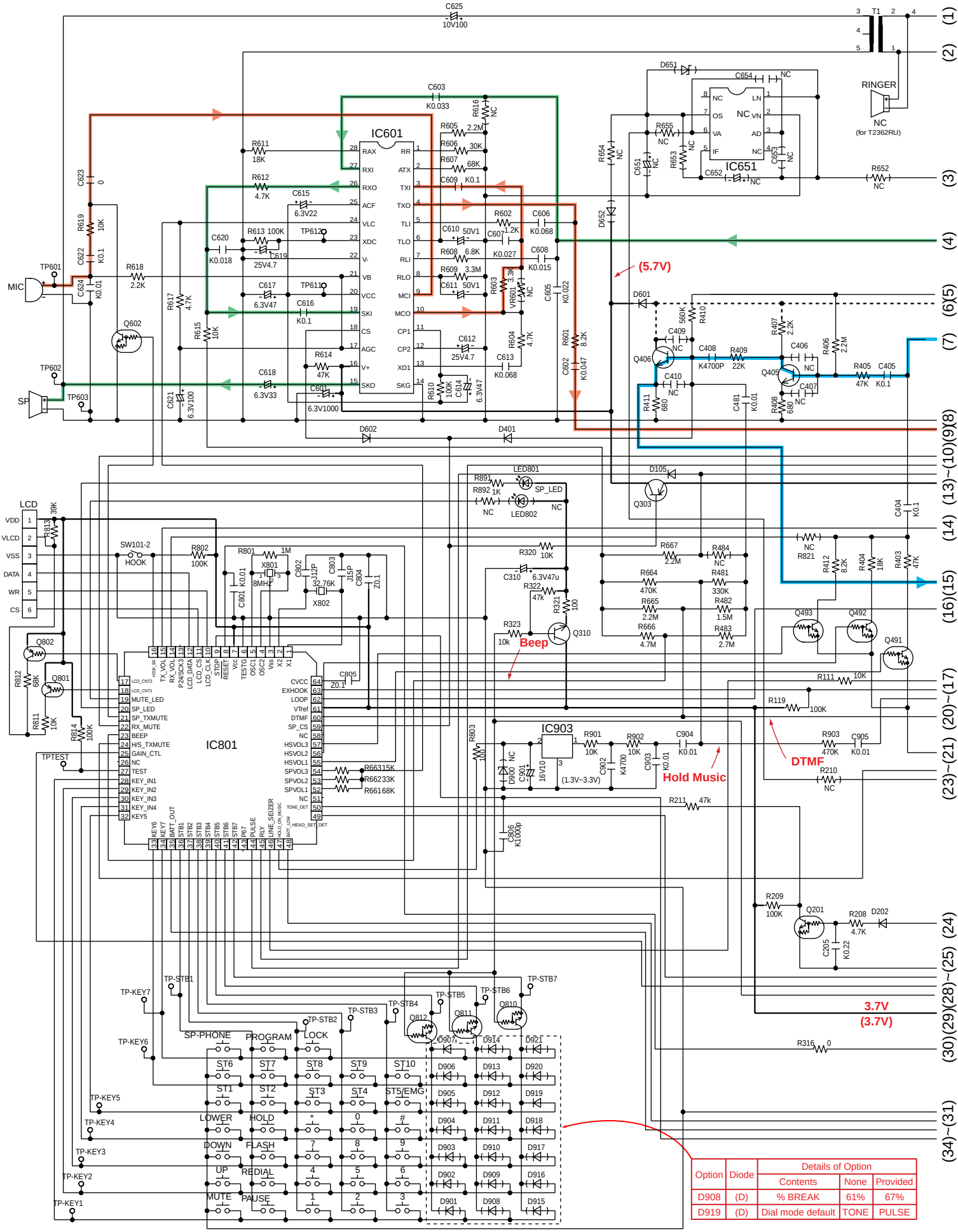

Option	Diode	Details of Option		
		Contents	None	Provided
D908	(D)	% BREAK	61%	67%
D919	(D)	Dial mode default	TONE	PULSE

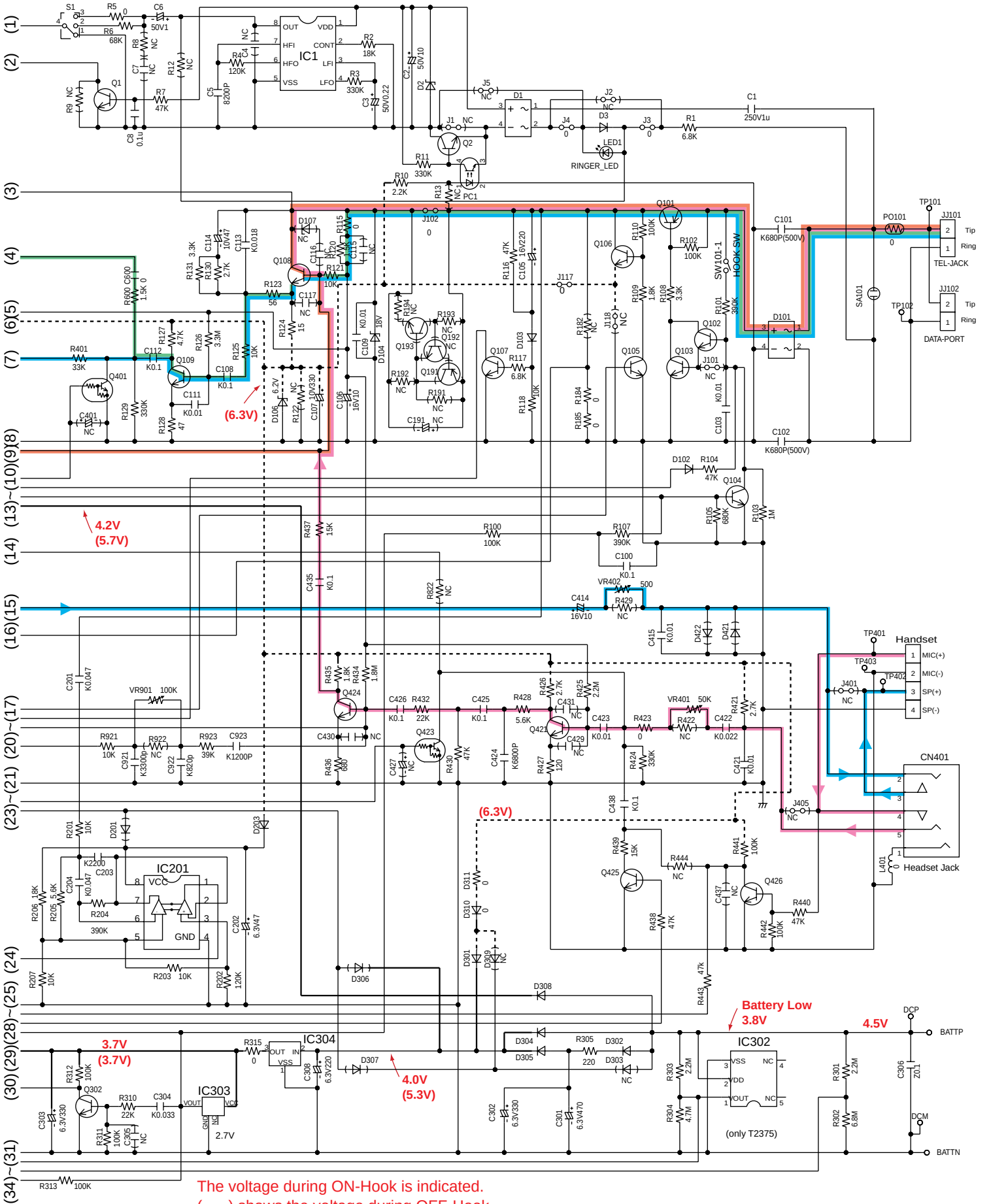

The voltage during ON-Hook is indicated.
( ) shows the voltage during OFF-Hook.

Handset & Headset Incoming Signal
Handset Set & Headset Outgoing Signal
Speaker Phone Incoming Signal
Speaker Phone Outgoing Signal

KX-TS2365RUB : SCHEMATIC DIAGRAM