S/M Code No.0076 DATE OF ISSUE 7/1992 - I

aiwa

XA-950

SERVICE MANUAL

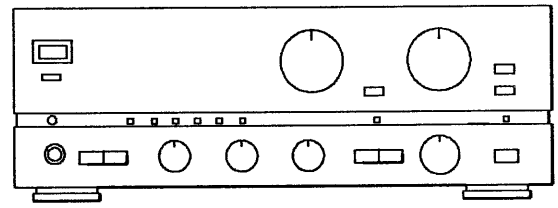

STEREO INTEGRATED AMPLIFIER

• TYPE. E,K,Z

SPECIFICATIONS

General

Power requirements
XA-950E, Z
230V AC, 50 Hz
XA-950K
240V AC, 50 Hz

Power consumption
300 W

Power amplifier

Effective output power
150 W+150 W
(4 ohms, T.H.D. 0.9%, 1 kHz)
100 W+100 W
(8 ohms, T.H.D. 0.9%, 1 kHz)

Total harmonic distortion
0.005%
(20 Hz–20 kHz, 75 W, 8 ohms)

Output bandwidth
5 Hz–70 kHz
(less than 0.05%)
(Both channels driven, 8 ohms)

Frequency response
5 Hz–150 kHz ($^{+0}_{-1}$ dB)

Preamplifier

S/N ratio (IHF A curve short circuited)

PHONO	: MM (5 mV input)	95 dB
	: MC (0.5 mV input)	75 dB
TUNER, CD, VIDEO/AUX, TAPE 1, TAPE 2/DAT, ADAPTOR		110 dB

Input jacks
(Sensitivity/input impedance)
PHONO : MM
2.5 mV/47k ohms
: MC
0.2 mV/100 ohms
TUNER, CD VIDEO/AUX, TAPE 1, TAPE 2/DAT, ADAPTOR: 150 mV/47k ohms

PHONO overload level
130 mV (MM)
(1 kHz, T.H.D 0.01%)

Output jacks
(Level/output impedance)
TAPE 1, TAPE 2/DAT, ADAPTOR: 150 mV/47k ohms
Headphones: 8–32 ohms
Speakers: 4–16 ohms
(A+B: 8–16 ohms)

RIAA deviation ±0.5 dB (30 Hz–15 kHz)

SUBSONIC filter
16 Hz 12 dB/Oct

Maximum dimensions (w/h/d) 430 × 140 × 340 mm (17 × 5⅝ × 13½ inches)

Weight 10.5 kg (23.1 lbs)

- Design and specifications are subject to change without notice.
- The word "BBE" and the "BBE symbol" are trademarks of BBE Sound, Inc.
- Under license from BBE Sound, Inc.

AIWA CO.,LTD. Tokyo Japan

Printed in Japan

ELECTRICAL MAIN PARTS LIST

REF. NO.	PART NO.	DESCRIPTION
=== IC ===		
	87-002-669-010	IC, GP1U-571X(SENSOR)
	87-020-738-019	IC, LB1630
	82-AA1-645-110	IC, LC6527H-4989
	87-001-171-019	IC, NJM2068D
	87-001-536-019	IC, NJM78M05FA
	87-027-787-010	IC, UPC1237H
=== TRANSISTOR ===		
	89-503-696-080	FET, 2SK369(BL)
	89-109-705-089	TRANSISTOR, 2SA970(GR)
	89-110-155-089	TRANSISTOR, 2SA1015(GR)
	89-112-162-310	TRANSISTOR, 2SA1216(P/Y)
	89-112-201-210	TRANSISTOR, 2SA1220A(R/Q)
	89-113-603-410	TRANSISTOR, 2SA1360(O, Y)
	89-213-302-089	TRANSISTOR, 2SB1330(Q)
	89-318-155-089	TRANSISTOR, 2SC1815(GR)
	89-322-405-089	TRANSISTOR, 2SC2240(GR)
	89-326-821-210	TRANSISTOR, 2SC2682(Q/P)
	89-326-901-210	TRANSISTOR, 2SC2690A(R/Q)
	89-329-222-310	TRANSISTOR, 2SC2922(P/Y)
	89-333-296-089	TRANSISTOR, 2SC3329(BL)
	89-334-194-010	TRANSISTOR, 2SC3419(Y)
	89-420-062-089	TRANSISTOR, 2SD2006(Q)
=== DIODE ===		
	87-020-123-089	DIODE DS446-AT (TA)
	87-001-783-089	DIODE, 1N4002-T
	87-020-110-089	DIODE, 1SS177
	87-027-788-010	DIODE, D5FB20
	87-027-224-089	DIODE, ZENER 05Z12L
	87-027-449-089	DIODE, ZENER HZ15-3L
=== MAIN CIRCUIT BOARD SECTION ===		
C41	★87-018-121-089	CAP, CERA-SOL U 150P-50 B(Z)
C42	★87-018-121-089	CAP, CERA-SOL U 150P-50 B(Z)
C43	★87-018-121-089	CAP, CERA-SOL U 150P-50 B(Z)
C44	★87-018-121-089	CAP, CERA-SOL U 150P-50 B(Z)
C45	★87-018-121-089	CAP, CERA-SOL U 150P-50 B(Z)
C46	★87-018-121-089	CAP, CERA-SOL U 150P-50 B(Z)
C47	★87-018-121-089	CAP, CERA-SOL U 150P-50 B(Z)
C48	★87-018-121-089	CAP, CERA-SOL U 150P-50 B(Z)
C49	★87-018-121-089	CAP, CERA-SOL U 150P-50 B(Z)
C50	★87-018-121-089	CAP, CERA-SOL U 150P-50 B(Z)
C51	★87-018-121-089	CAP, CERA-SOL U 150P-50 B(Z)
C52	★87-018-121-089	CAP, CERA-SOL U 150P-50 B(Z)
C53	★87-018-121-089	CAP, CERA-SOL U 150P-50 B(Z)
C54	★87-018-121-089	CAP, CERA-SOL U 150P-50 B(Z)
C55	★87-018-121-089	CAP, CERA-SOL U 150P-50 B(Z)
C56	★87-018-121-089	CAP, CERA-SOL U 150P-50 B(Z)
C57	★87-018-121-089	CAP, CERA-SOL U 150P-50 B(Z)
C58	★87-018-121-089	CAP, CERA-SOL U 150P-50 B(Z)
C59	★87-018-134-089	CAP, CERA-SOL U 0.01-16 Y
C101	★87-010-405-089	CAP, ELECT 10-50 SME
C102	★87-010-405-089	CAP, ELECT 10-50 SME
C103	★87-010-430-089	CAP, ELECT 100-63
C104	★87-010-430-089	CAP, ELECT 100-63
C109	★87-010-430-089	CAP, ELECT 100-63
C110	★87-010-430-089	CAP, ELECT 100-63
C111	★87-010-263-089	CAP, ELECT 100-10
C112	★87-010-263-089	CAP, ELECT 100-10
C127	★87-018-131-089	CAP, CERA-SOL U 1000P-50 B
C128	★87-018-131-089	CAP, CERA-SOL U 1000P-50 B
C133	★87-018-100-089	CAP, CERA-SOL U 4.7P-50 SL
C134	★87-018-100-089	CAP, CERA-SOL U 4.7P-50 SL
C135	★87-018-217-089	CAP, CERA-SOL U 3300P-50C(Z)
C136	★87-018-217-089	CAP, CERA-SOL U 3300P-50C(Z)
C137	★87-018-217-089	CAP, CERA-SOL U 3300P-50C(Z)
C138	★87-018-217-089	CAP, CERA-SOL U 3300P-50C(Z)
C139	★87-018-131-089	CAP, CERA-SOL U 1000P-50 B(Z)
C140	★87-018-131-089	CAP, CERA-SOL U 1000P-50 B(Z)
C141	★87-018-131-089	CAP, CERA-SOL U 1000P-50 B(Z)
C142	★87-018-131-089	CAP, CERA-SOL U 1000P-50 B(Z)
C143	★87-018-133-089	CAP, CERA-SOL U 4700P-16 X(Z)
C144	★87-018-133-089	CAP, CERA-SOL U 4700P-16 X(Z)
C145	★87-010-401-089	CAP, ELECT 1-50 SME
C146	★87-010-401-089	CAP, ELECT 1-50 SME
C152	★87-010-401-089	CAP, ELECT 1-50 SME
C153	★87-010-762-089	CAP, ELECT, 220-10V BP
C155	★87-010-405-089	CAP, ELECT 10-50 SME
C156	★87-010-260-089	CAP, ELECT 47-25 SME
C157	★87-010-260-089	CAP, ELECT 47-25 SME
C158	★87-010-260-089	CAP, ELECT 47-25 SME
C159	★87-010-260-089	CAP, ELECT 47-25 SME
C160	★87-010-260-089	CAP, ELECT 47-25 SME
C161	★87-010-260-089	CAP, ELECT 47-25 SME
C162	★87-010-260-089	CAP, ELECT 47-25 SME
C163	★87-010-397-099	CAP, ELECT 1000-35
C164	★87-010-397-099	CAP, ELECT 1000-35
C165	★82-AA1-631-010	CAP, ELECT 12000-63
C166	★82-AA1-631-010	CAP, ELECT 12000-63
C171	★87-010-384-089	CAP, ELECT 100-25 SME
FR1	★87-029-130-090	RES, FUSE 220-1W
FR2	★87-029-130-090	RES, FUSE 220-1W
J102	★87-009-395-010	JACK, PIN 6P EARTH(INPUT)
J103	★87-009-392-010	JACK, PIN 6P(TAPE 2/DAT, TAPE 1)
J104	★87-009-392-010	JACK, PIN 6P(TAPE 1, ADAPTOR)
L1	★87-005-158-019	COIL, 1UH
L2	★87-005-158-019	COIL, 1UH
R159	★87-022-326-089	RES, NF 56-1/4W J
R160	★87-022-326-089	RES, NF 56-1/4W J
R163	★87-025-479-089	RES, NF 100-1/4 WJ
R164	★87-025-479-089	RES, NF 100-1/4 WJ
R165	★87-025-479-089	RES, NF 100-1/4 WJ
R166	★87-025-479-089	RES, NF 100-1/4 WJ
R173	87-025-477-089	RES, NF 47-1/4W J
R174	87-025-477-089	RES, NF 47-1/4W J
R175	87-025-477-089	RES, NF 47-1/4W J
R176	87-025-477-089	RES, NF 47-1/4W J
R179	★81-AA3-619-010	RES, 0.22-5WX2 MPC
R180	★81-AA3-619-010	RES, 0.22-5WX2 MPC
R193	★87-025-487-089	RES, M/F 10-1W
R194	★87-025-487-089	RES, M/F 10-1W
R197	★87-025-347-090	RES, 10-2W
R198	★87-025-347-090	RES, 10-2W
R223	★87-025-471-089	RES, NF 4.7-1/4WJ
R224	★87-025-471-089	RES, NF 4.7-1/4WJ
R225	★87-025-471-089	RES, NF 4.7-1/4WJ
R226	★87-025-471-089	RES, NF 4.7-1/4WJ
R227	★87-025-484-089	RES, NF 680-1/4W J
R228	★87-025-484-089	RES, NF 680-1/4W J
R231	★87-025-467-089	RES, NF 1-1/4 WJ
R232	★87-025-467-089	RES, NF 1-1/4 WJ
RY1	★87-045-330-010	RELAY, RY-12WK
RY2	★87-045-330-010	RELAY, RY-12WK
RY3	★87-045-330-010	RELAY, RY-12WK
RY4	★87-045-330-010	RELAY, RY-12WK

IC BLOCK DIAGRAM

IC, μ PC1237H

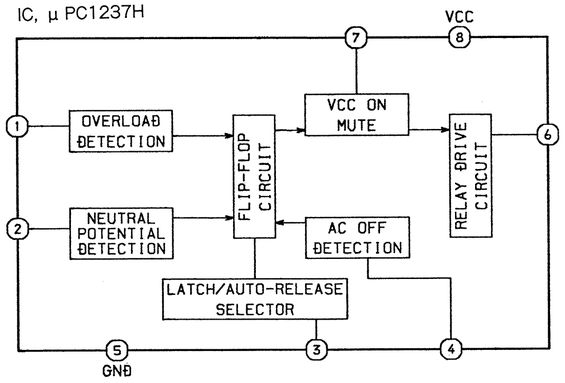

NJM2068D

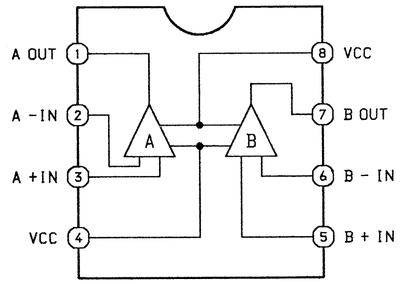

(TOP VIEW)

TRUTH TABLE

LB1630

IN1	IN2	OUT1	OUT2	MOTOR
H	L	H	L	FORWARD
L	H	L	H	REVERSE
H	H	OFF	OFF	STANDBY
L	L	OFF	OFF	STANDBY

REF. NO.	PART NO.	DESCRIPTION
RY5	★87-045-330-010	RELAY, RY-12WK
RY6	★87-045-330-010	RELAY, RY-12WK
RY7	★87-045-316-010	RELAY, VB-24SMBU-SP
RY8	★87-045-316-010	RELAY, VB-24SMBU-SP
RY9	★87-045-339-010	RELAY, RY24W K 24V
S7	★82-AA1-633-010	SW, PUSH (ADAPTOR TAPE MONITOR)
S10	★82-AA1-618-010	SW, ROTARY (REC SELECTOR)
SFR1	★87-024-171-089	SFR, 4.7K DIA6 V
SFR2	★87-024-171-089	SFR, 4.7K DIA6 V
T101	★87-033-210-010	TERMINAL, 8P SPKR (SPEAKERS) (K)
T101	★87-033-222-010	TERMINAL, 8P SPKR (SPEAKERS) (E, Z)
		=== FRONT CIRCUIT BOARD SECTION ===
C61	★87-018-126-089	CAP, CERA-SOL U 390P-50 B
C62	★87-018-126-089	CAP, CERA-SOL U 390P-50 B
C65	★87-010-401-089	CAP, ELECT 1-50 SME
C66	★87-010-401-089	CAP, ELECT 1-50 SME
C67	★87-018-109-089	CAP, CERA-SOL U 22P-50 SL
C68	★87-018-109-089	CAP, CERA-SOL U 22P-50 SL
C69	★87-010-403-089	CAP, ELECT 3.3-50 SME
C70	★87-010-403-089	CAP, ELECT 3.3-50 SME
C77	★87-018-123-089	CAP, CERA-SOL U 220P-50 B
C78	★87-018-123-089	CAP, CERA-SOL U 220P-50 B
C81	★87-010-382-089	CAP, ELECT 22-25 SME
C82	★87-010-382-089	CAP, ELECT 22-25 SME
C83	★87-010-401-089	CAP, ELECT 1-50 SME
C84	★87-010-401-089	CAP, ELECT 1-50 SME
C85	★87-010-260-089	CAP, ELECT 47-25 SME
C86	★87-010-260-089	CAP, ELECT 47-25 SME
C87	★87-018-109-089	CAP, CERA-SOL U 22P-50 SL
C88	★87-018-109-089	CAP, CERA-SOL U 22P-50 SL
C89	★87-010-260-089	CAP, ELECT 47-25 SME
C90	★87-010-260-089	CAP, ELECT 47-25 SME
C91	★87-010-404-089	CAP, ELECT 4.7-50 SME
C92	★87-010-404-089	CAP, ELECT 4.7-50 SME
C172	★87-018-209-089	CAP, CERA-SOL U 0.1-50 F
C173	★87-018-209-089	CAP, CERA-SOL U 0.1-50 F
C174	★87-018-209-089	CAP, CERA-SOL U 0.1-50 F
C175	★87-018-209-089	CAP, CERA-SOL U 0.1-50 F
C176	★87-018-209-089	CAP, CERA-SOL U 0.1-50 F
C177	★87-018-209-089	CAP, CERA-SOL U 0.1-50 F
C201	★87-010-370-089	CAP, ELECT 330-6.3 SME
C202	★87-010-401-089	CAP, ELECT 1-50 SME
C203	★87-010-401-089	CAP, ELECT 1-50 SME
C204	★87-015-695-089	CAP, ELECT 1-50 7L
C205	★87-018-133-089	CAP, CERA-SOL U 470P-16 X
C206	★87-018-133-089	CAP, CERA-SOL U 470P-16 X
C207	87-010-370-089	CAP, ELECT 330-6.3 SME
LED2	★87-002-819-080	LED, SLR-56VR (SOURCE DIRECT)
LED3	★87-002-819-080	LED, SLR-56VR(PHONO)
LED4	★87-002-819-080	LED, SLR-56VR(TUNER)
LED5	★87-002-819-080	LED, SLR-56VR(CD)
LED6	★87-002-819-080	LED, SLR-56VR(VIDEO/AUX)
LED7	★87-002-819-080	LED, SLR-56VR(TAPE2→1)
LED8	★87-002-819-080	LED, SLR-56VR(TAPE1→2)
LED9	★87-002-819-080	LED, SLR-56VR(POWER)
R250	87-025-478-089	RES, NF 68-1/4W J
S4	★82-AA1-634-010	SW, PUSH(MUTING)
S5	★82-AA1-635-010	SW, PUSH(LOUDNESS/SOURCE DIRECT)
VR2	★82-AA1-640-010	VR, 100K(M.N) (BALANCE)
VR3	★82-AA1-641-010	VR, 50K(C) C OPEN(TREBLE)
VR4	★82-AA1-642-010	VR, 50K(C) C SHORT(BASS)
X1	★87-MX1-704-089	CERA LOCK(MU) 3.9MHZ

REF. NO.	PART NO.	DESCRIPTION
		=== EQ CIRCUIT BOARD SECTION ===
C1	★87-018-119-089	CAP, CERA-SOL U 100P-50 B(E, K)
C2	★87-018-119-089	CAP, CERA-SOL U 100P-50 B(E, K)
C3	★87-018-131-089	CAP, CERA-SOL U 1000P-50 B
C4	★87-018-131-089	CAP, CERA-SOL U 1000P-50 B
C5	★87-018-125-089	CAP, CERA-SOL U 330P-50 B
C6	★87-018-125-089	CAP, CERA-SOL U 330P-50 B
C7	★87-018-125-089	CAP, CERA-SOL U 330P-50 B(Z)
C8	★87-018-125-089	CAP, CERA-SOL U 330P-50 B(Z)
C9	★87-018-114-089	CAP, CERA-SOL U 39P-50 SL
C10	★87-018-114-089	CAP, CERA-SOL U 39P-50 SL
C11	★87-018-199-089	CAP, CERA-SOL U 3300P-16 X
C12	★87-018-199-089	CAP, CERA-SOL U 3300P-16 X
C13	★87-010-370-089	CAP, ELECT 330-6.3 SME
C14	★87-010-370-089	CAP, ELECT 330-6.3 SME
C21	★87-010-404-089	CAP, ELECT 4.7-50 SME
C22	★87-010-404-089	CAP, ELECT 4.7-50 SME
C23	★87-018-200-089	CAP, CERA-SOL U 3900P-16X
C24	★87-018-200-089	CAP, CERA-SOL U 3900P-16X
C29	★87-018-121-089	CAP, CERA-SOL U 150P-50 B
C30	★87-018-121-089	CAP, CERA-SOL U 150P-50 B
C31	★87-010-404-089	CAP, ELECT 4.7-50 SME
C32	★87-010-404-089	CAP, ELECT 4.7-50 SME
C33	★87-018-134-089	CAP, CERA-SOL U 0.01-16 Y
C35	★87-010-260-089	CAP, ELECT 47-25 SME
C36	★87-010-260-089	CAP, ELECT 47-25 SME
C37	★87-010-381-089	CAP, ELECT 330-16 SME
C38	★87-010-381-089	CAP, ELECT 330-16 SME
C39	★87-010-260-089	CAP, ELECT 47-25 SME
C40	★87-010-260-089	CAP, ELECT 47-25 SME
C401	★87-010-260-089	CAP, ELECT 47-25 SME
C402	★87-010-260-089	CAP, ELECT 47-25 SME
J101	★87-009-610-019	JACK, PIN 2P H EARTH (PHONO INPUT)
L3	87-005-154-089	COIL 220UH LAL03(Z)
L4	87-005-154-089	COIL 220UH LAL03(Z)
L5	87-005-154-089	COIL 220UH LAL03(Z)
L6	87-005-154-089	COIL 220UH LAL03(Z)
S8	★82-AA1-636-010	SW, PUSH(SUBSONIC)
S9	★82-AA1-637-010	SW, PUSH(CARTRIDGE)
		=== LED CIRCUIT BOARD SECTION ===
LED1	87-002-819-080	LED, SLR-56VR(ADAPTOR TAPE MONITOR)
		=== PHONES CIRCUIT BOARD SECTION ===
J105	★87-009-043-010	JACK, 6.3 12.5-11.5(PHONES)
S2	★82-AA1-632-010	SW, PUSH(SPEAKERS)
		=== VOL. CIRCUIT BOARD SECTION ===
C167	★87-010-382-089	CAP, ELECT 22-25 SME
C168	★87-010-382-089	CAP, ELECT 22-25 SME
L7	87-005-235-080	COIL, 2.7MMH
VR1	★82-AA1-639-010	VR, 100K(B) W/LED 10, MOTOR(VOLUME)
		=== PULSE SW CIRCUIT BOARD SECTION ===
S11	★82-AA1-638-010	SW, ROTARY (INPUT SELECTOR)
		=== REMOTE CIRCUIT BOARD SECTION ===
		=== P.T. CIRCUIT BOARD SECTION ===
△	87-033-213-089	CLAMP FUSE SMK
C199	★87-016-157-090	CAP, MYLER 0.1-250
△F1	87-035-367-010	FUSE, 3.15A 250V T E

REF. NO.	PART NO.	DESCRIPTION
△PT1	82-AA1-608-018	PT, E(E, Z)
△PT1	82-AA1-609-018	PT, K(K)
		=== P.S. CIRCUIT BOARD SECTION ===
△C251	★87-019-112-019	CAP, SG 0.01 E
△S1	87-036-234-010	SW, PUSH(POWER)
		=== OUTLET(E, K, Z ONLY) CIRCUIT BOARD SECTION ===
△J8	★87-009-932-010	OUTLET, AC E (AC OUTLET) (E, Z)
△J8	★87-009-933-010	OUTLET, AC K-N (AC OUTLET) (K)
△J9	★87-009-932-010	OUTLET, AC E (AC OUTLET) (E, Z)
△J9	★87-009-933-010	OUTLET, AC K-N (AC OUTLET) (K)
		=== MISCELLANEOUS ===
△	★87-034-592-018	AC CORD (BS) (K)
△	★87-034-781-018	AC CORD(E) (E, Z)
△	★87-085-185-010	BUSHING, AC CORD E

TRANSISTOR ILLUSTRATION

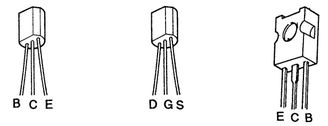

2SA970
2SA1015
2SC1815
2SC2240
2SC3329

2SK369

2SA1360
2SC3419

2SA1220
2SC2682
2SC2690

2SA1216
2SC2922

2SB1330
2SD2006

IC DESCRIPTION

IC, LC6527H – 4989

Pin No.	Pin Name	I/O	Description
1	OSC1	–	SYSTEM clock oscillator signal. Clock frequency is 4MHz.
2	TEST	–	LSI TEST mode setting. Connected to VSS
3	VSS	I	Connected to ground
4	RES	I	SYSTEM reset input
5	PA0	–	Power on detection signal
6	PA1	I	ENCODER A signal input. (active : Hi)
7	PA2	I	ENCODER B signal input. (active : Hi)
8	PA3	I	REMOCON signal input.
9	VDD	–	Power supply. (connected to +5V)
10	PC0	O	VOLUME UP signal output. (active : Hi)
11	PC1	O	VOLUME DOWN signal output. (active : Hi)
12	PC2	O	RELAY, LED driver output. (active : Hi)
13	PC3	O	RELAY, LED driver output. (active : Hi)
14	PD0	O	RELAY, LED driver output. (active : Hi)
15	PD1	O	RELAY, LED driver output. (active : Hi)
16	PD2	O	RELAY, LED driver output. (active : Hi)
17	PD3	O	RELAY, LED driver output. (active : Hi)
18	OSC2	–	SYSTEM clock oscillator signal

ADJUSTMENT

A MAIN C. B

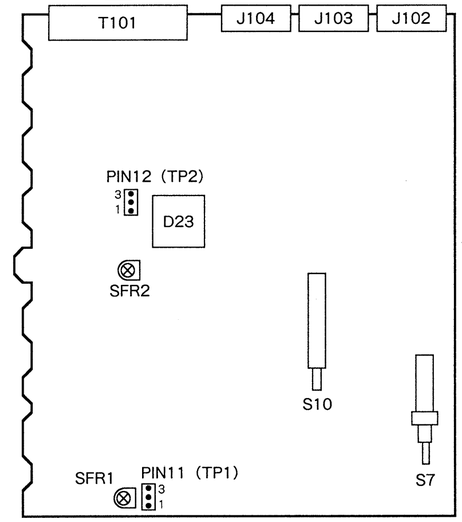

IDLING CURRENT ADJUSTMENT

Settings : • Test Points : TP1 (PIN11, Lch)
TP2 (PIN12, Rch)
• Adjustment Locations : SFR1 (Lch)
SFR2 (Rch)

Method : Connect the voltmeter at TP1, TP2 (⊕side : 1, ⊖side : 3) and adjust so that the voltage is 8.0mV.

SCHEMATIC DIAGRAM

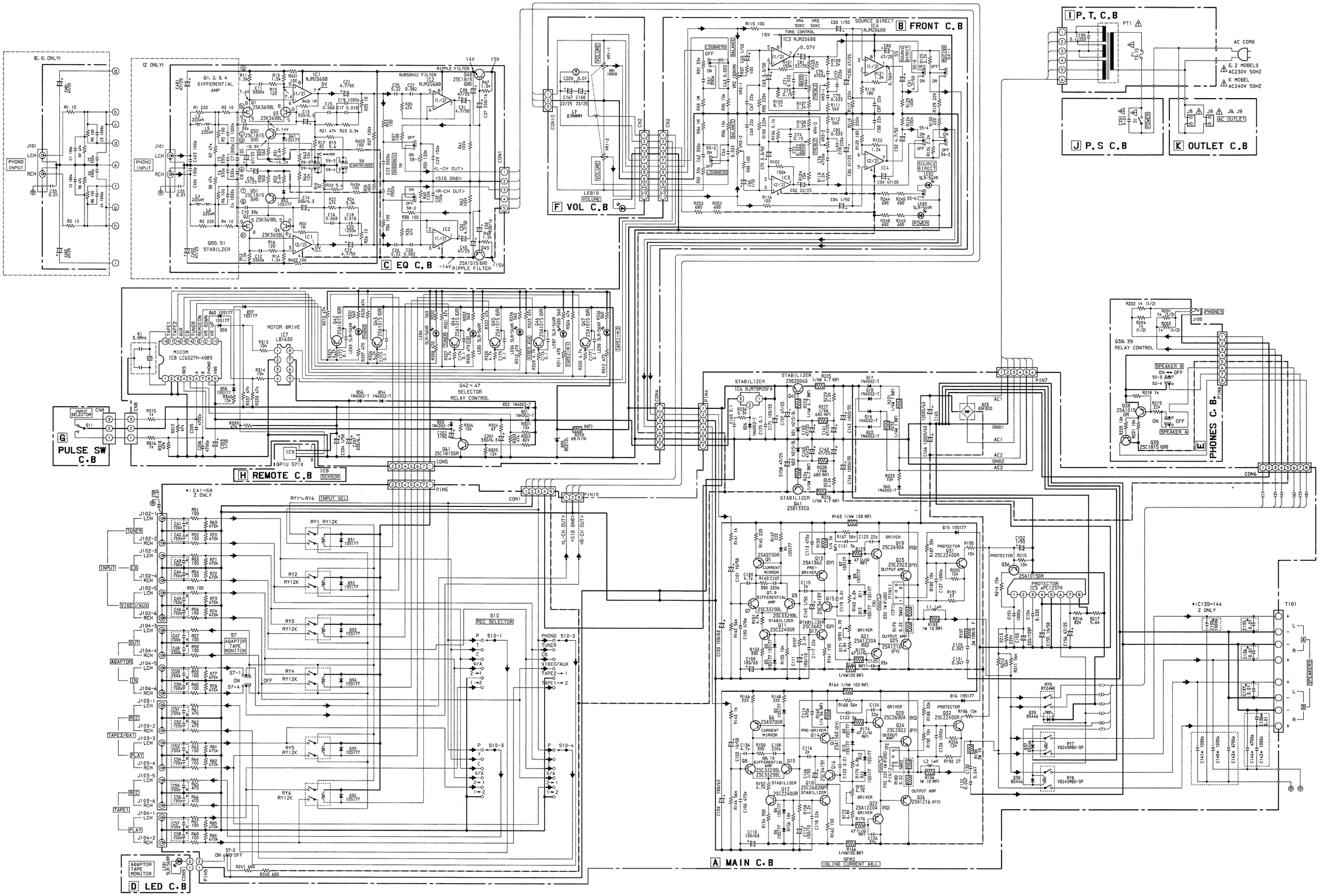

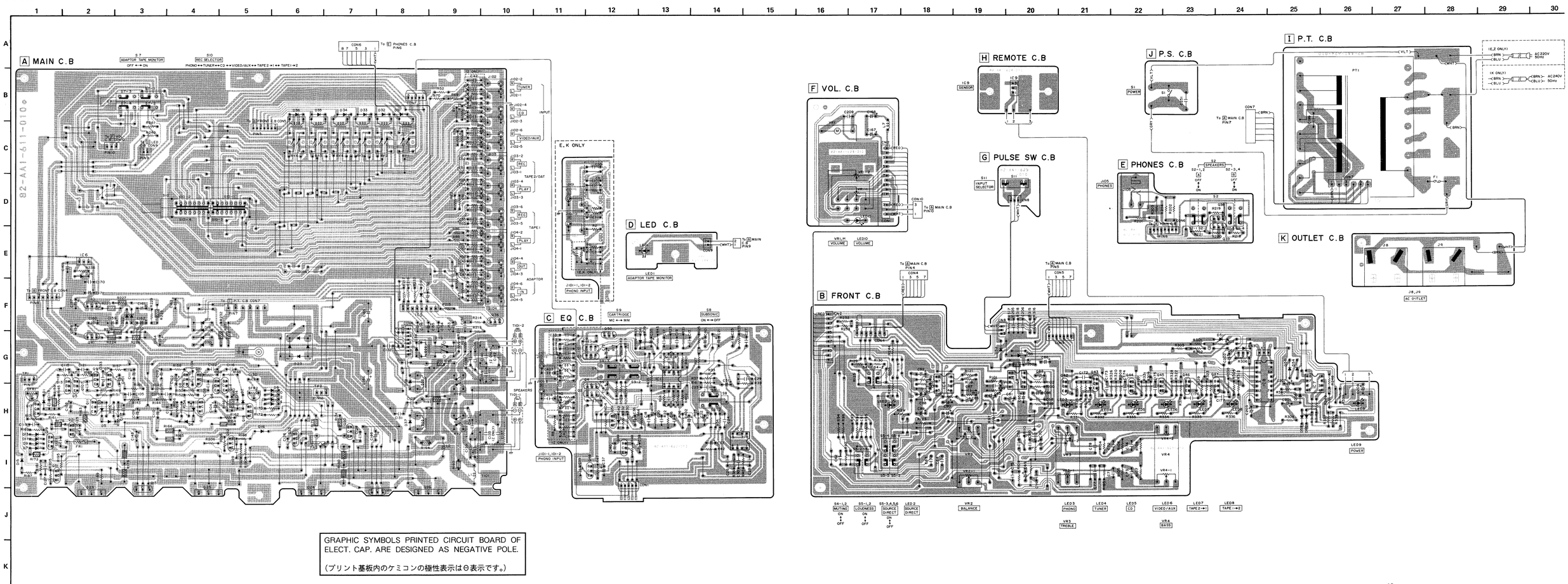

GRAPHIC SYMBOLS PRINTED CIRCUIT BOARD OF ELECT. CAP. ARE DESIGNED AS NEGATIVE POLE.

(プリント基板内のケミコンの極性表示はθ表示です。)

BLOCK DIAGRAM

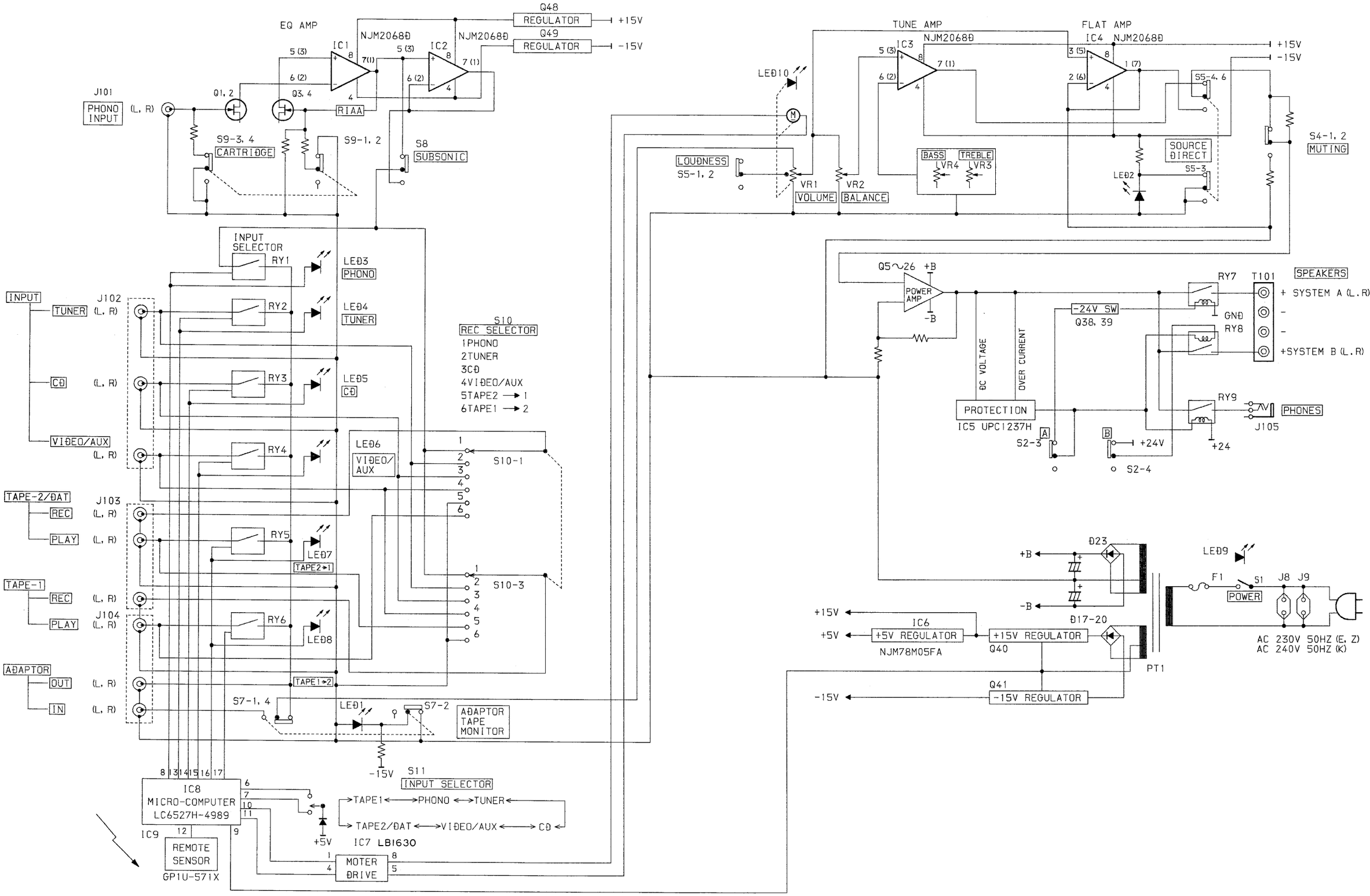

EXPLODED VIEW – 1

REF.NO.	PART NO.	DESCRIPTION
A	87-067-689-010	BVTT+3-8
B	87-067-660-010	BVT_2+3-8 W/O SLOT(B)
C	87-067-703-010	BVT_2+3-10 W/O SLOT
D	87-067-761-010	BVT_2+3-10(B)
E	87-067-540-010	SCREW,CASE

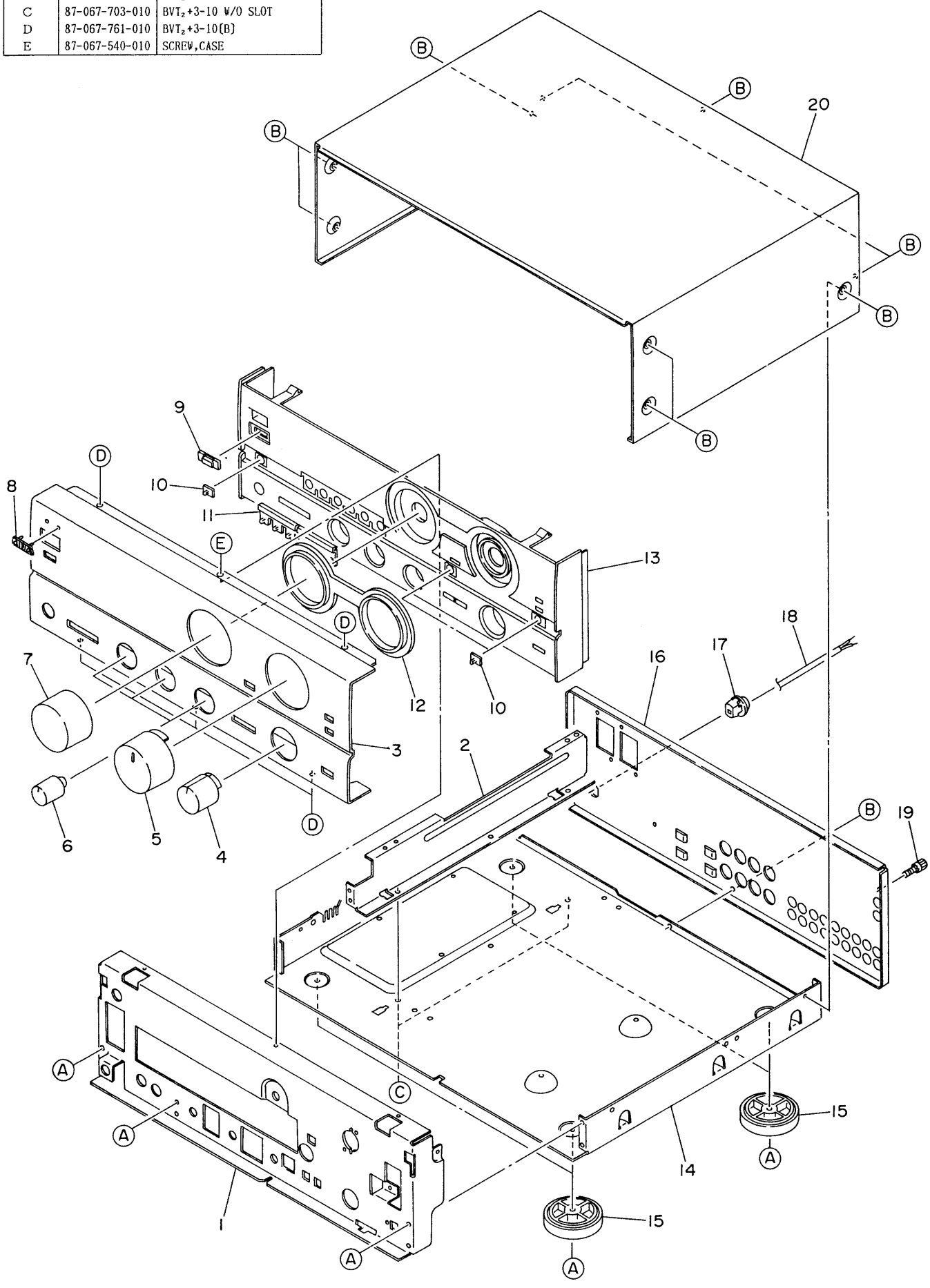

MECHANICAL PARTS LIST

PART NO. CHANGED TO	REF. NO.	PART NO.	DESCRIPTION	COMMON MODEL	Q. TY
	1-1	---	CHASSIS, FRONT		1
	1-2	---	HOLDER, SIDE		1
	1-3	★82-AA1-004-010	PANEL, FRONT	*	1
	1-4	★82-AA1-012-010	KNOB REC SEL ASSY	*	1
	1-5	★82-AA1-009-010	KNOB VOLUME ASSY	*	1
	1-6	★82-AA1-010-019	KNOB, BALANCE	*	3
	1-7	★82-AA1-011-010	KNOB INPUT SEL ASSY	*	1
	1-8	★81-DS1-011-019	BADGE, AIWA N		1
	1-9	★82-AA1-020-019	WINDOW, RC	*	1
	1-10	★82-AA1-022-019	POINTER, 1P	*	3
	1-11	★82-AA1-017-019	POINTER, 6P	*	1
	1-12	★82-AA1-018-019	RING, VOLUME	*	1
	1-13	★82-AA1-001-010	CABINET, FRONT	*	1
	1-14	---	CHASSIS, MAIN		1
	1-15	★82-AA1-029-010	FOOT	*	4
	1-16	★82-AA1-006-019	PANEL, REAR(E)	*	1
	1-16	★82-AA1-007-019	PANEL, REAR(K)	*	1
	1-16	★82-AA1-008-019	PANEL, REAR(Z)	*	1
	1-17	★87-085-185-010	BUSHING, AC CORD		1
	1-18	★87-034-781-010	CORD, AC(E, Z)		1
	1-18	★87-034-592-010	CORD, AC(K)		1
	1-19	---	TERMINAL, EARTH		1
	1-20	★82-AA1-002-018	CABINET, STEEL	*	1

EXPLODED VIEW – 2

REF.NO.	PART NO.	DESCRIPTION
A	87-067-689-010	BVTT+3-8
B	87-067-660-010	BVT_2+3-8 W/O SLOT(B)
C	87-067-579-010	BVT_2+3-8 W/O SLOT
D	87-067-703-010	BVT_2+3-10 W/O SLOT
E	87-067-581-010	BVT_2+3-15 W/O SLOT
F	87-067-586-010	BVTT+4-8
G	87-751-096-410	VT_2+3-10

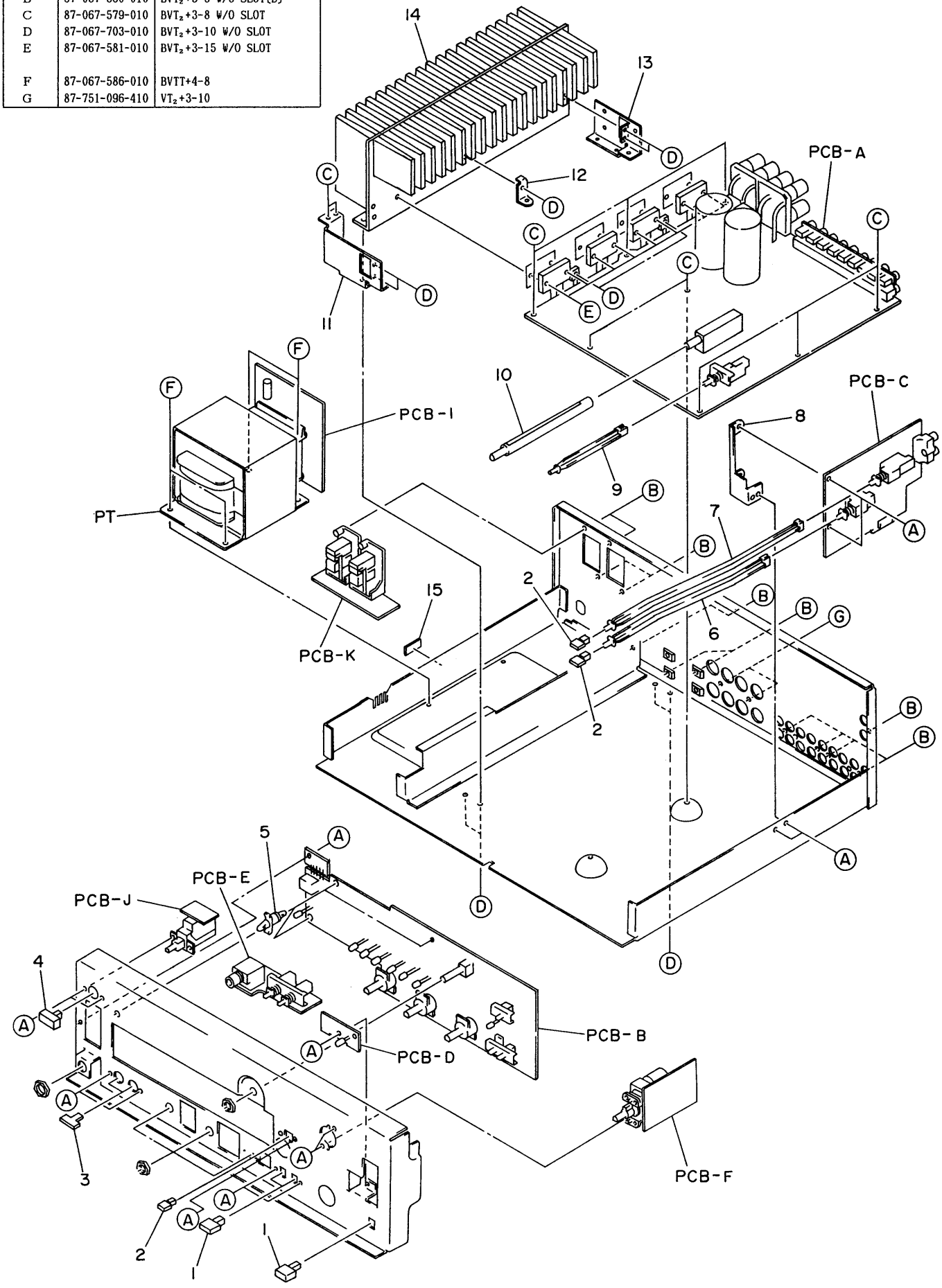

PART NO. CHANGED TO	REF. NO.	PART NO.	DESCRIPTION	COMMON MODEL	Q, TY
	2-1	★82-AA1-014-019	BUTTON, LOUDNESS	*	3
	2-2	★82-AA1-013-019	BUTTON, MUTE	*	3
	2-3	★82-AA1-015-019	BUTTON, SPEAKER	*	2
	2-4	★82-AA1-016-019	BUTTON, POWER	*	1
	2-5	---	HOLDER, B PWB		3
	2-6	★82-AA1-207-019	ROD, SUB	*	1
	2-7	★82-AA1-206-019	ROD, MM/MC	*	1
	2-8	---	HOLDER, PCB 3		1
	2-9	★82-AA1-211-019	ROD, ADAPTOR	*	1
	2-10	★82-AA1-208-019	ROD, SEL	*	1
	2-11	---	HOLDER, PCB 1		1
	2-12	---	HOLDER, A		1
	2-13	---	HOLDER, PCB 2		1
	2-14	---	HEAT SINK, MAIN		1
	2-15	★81-512-246-010	G-CUSHION, 3-8-20		1

■ ACCESSORIES/PACKAGE LIST

PART NO. CHANGED TO	REF. NO.	PART NO.	DESCRIPTION	COMMON MODEL	Q, TY
	1	★82-AA1-901-018	INSTRUCTION BOOKLET, EX	※	1
	2	★82-AA1-033-010	REMOTE CONTROL, RC-A950LE(E, Z)	※	1
	3	★82-AA1-034-010	REMOTE CONTROL, RC-A950L(K)	※	1

920074,861377

PRINTING THE SERVICE MANUAL

The PDF of this service manual is not designed to be printed from cover to cover. The pages vary in size, and must therefore be printed in sections based on page dimensions.

NON-SCHEMATIC PAGES

Data that does NOT INCLUDE schematic diagrams are formatted to 8.5 x 11 inches and can be printed on standard letter-size and/or A4-sized paper.

SCHEMATIC DIAGRAMS

The schematic diagram pages are provided in two ways, full size and tiled. The full-sized schematic diagrams are formatted on paper sizes between 8.5" x 11" and 18" x 30" depending upon each individual diagram size. Those diagrams that are LARGER than 11" x 17" in full-size mode have been tiled for your convience and can be printed on standard 11" x 17" (tabloid-size) paper, and reassembled.

TO PRINT FULL SIZE SCHEMATIC DIAGRAMS

If you have access to a large paper plotter or printer capable of outputting the full-sized diagrams, output as follows:

1) Note the page size(s) of the schematics you want to output as indicated in the middle window at the bottom of the viewing screen.

2) Go to the File menu and select Print Set-up. Choose the printer name and driver for your large format printer. Confirm that the printer settings are set to output the indicated page size or larger.

3) Close the Print Set Up screen and return to the File menu. Select "Print..." Input the page number of the schematic(s) you want to print in the print range window. Choose OK.

TO PRINT TILED VERSION OF SCHEMATICS

Schematic pages that are larger than 11" x 17" full-size are provided in a 11" x 17" printable tiled format near the end of the document. These can be printed to tabloid-sized paper and assembled to full-size for easy viewing.

If you have access to a printer capable of outputting the tabloid size (11" x 17") paper, then output the tiled version of the diagram as follows:

1) Note the page number(s) of the schematics you want to output as indicated in the middle window at the bottom of the viewing screen.

2) Go to the File menu and select Print Set-up. Choose the printer name and driver for your printer. Confirm that the plotter settings are set to output 11" x 17", or tabloid size paper in landscape ( ) mode.

3) Close the Print Set Up screen and return to the File menu. Select "Print..." Input the page number of the schematic(s) you want to print in the print range window. Choose OK.

TO PRINT SPECIFIC SECTIONS OF A SCHEMATIC

To print just a particular section of a PDF, rather than a full page, access the Graphics Select tool in the Acrobat Reader tool bar.

1) To view the Graphics Select Tool, press and HOLD the mouse button over the Text Select Tool which looks like:
This tool will expand to reveal to additional tools.
Choose the Graphics Select tool by placing the cursor over the button on of the far right that looks like:

2) After selecting the Graphics Select Tool, place your cursor in the document window and the cursor will change to a plus (+) symbol. Click and drag the cursor over the area you want to print. When you release the mouse button, a marquee (or dotted lined box) will be displayed outlining the area you selected.

3) With the marquee in place, go to the file menu and select the "Print..." option. When the print window appears, choose the option under the section called "Print Range" which says "Selected Graphic".

Select OK and the output will print only the area that you outlined with the marquee.

(continued >)