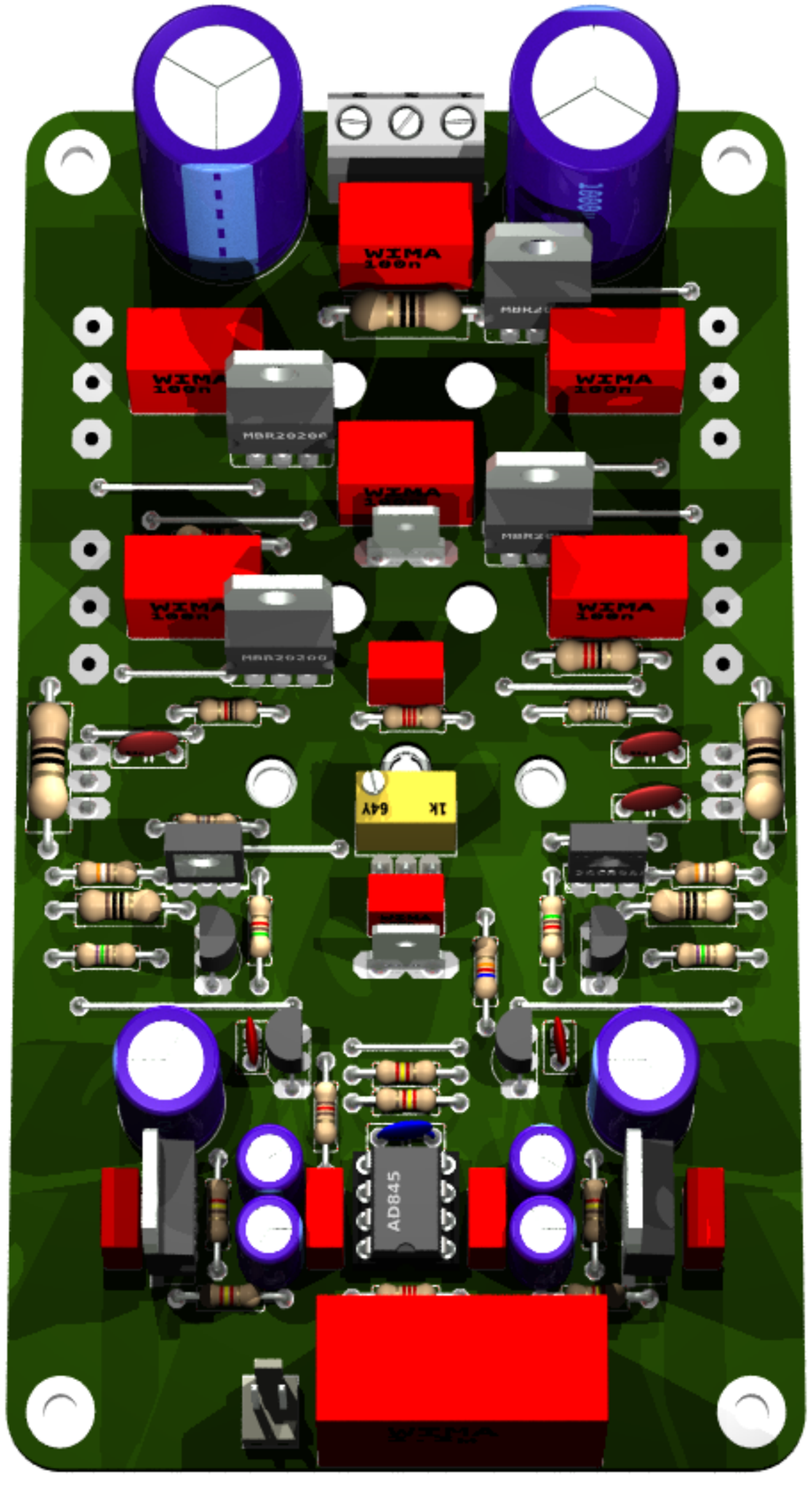
WIMA
100n
WIMA
100n
WIMA
100n
WIMA
100n
WIMA
100n
MBR20200
MBR20200
1k
64V
AD845

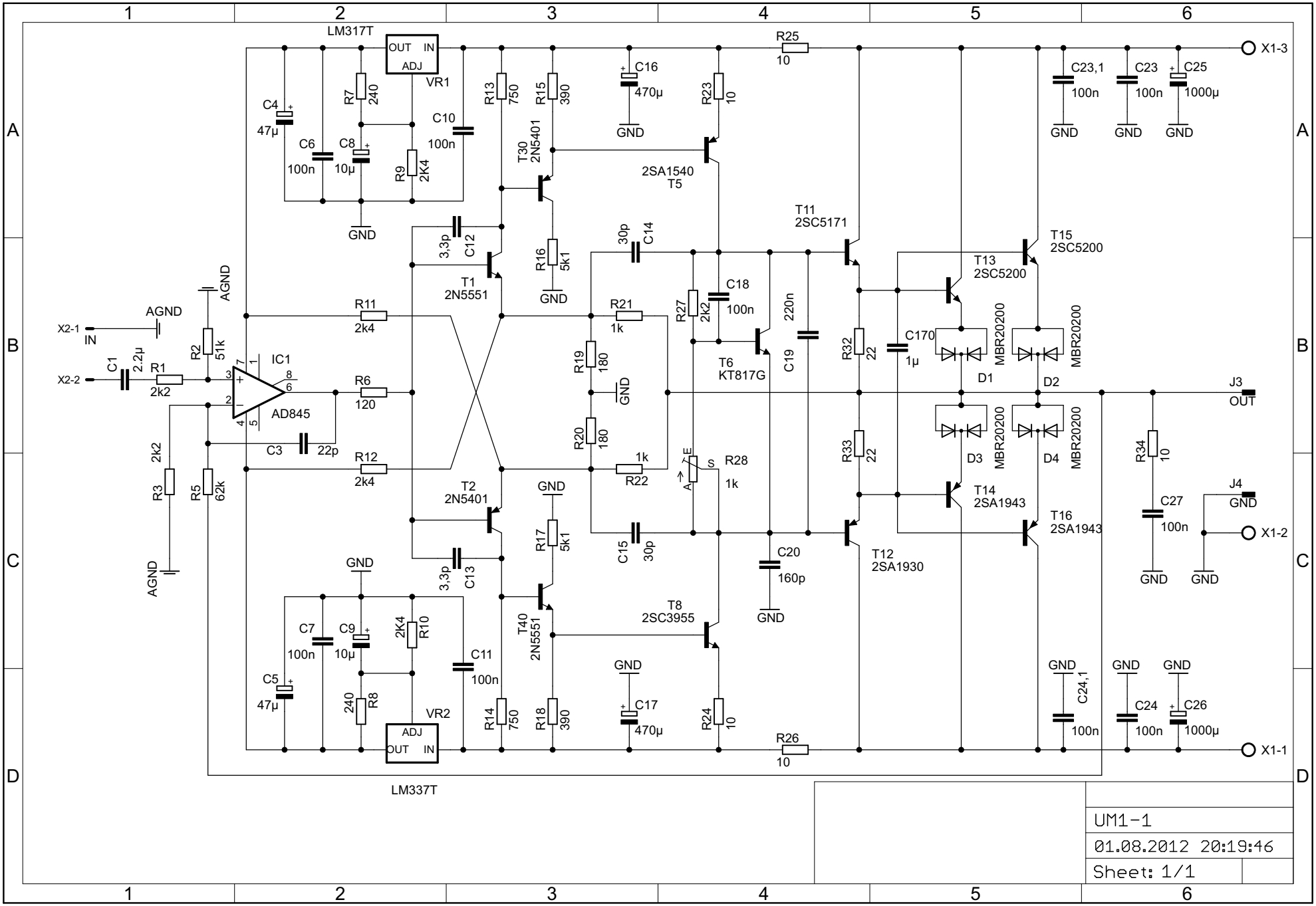
LM317T
OUT IN
ADJ
VR1
R7 240
C4 47µ
C6 100n
C8 10µ
R9 2K4
C10 100n
GND
R13 750
R15 390
T30 2N5401
R16 5k1
C12 3,3p
T1 2N5551
C16 470µ
R23 10
2SA1540 T5
R25 10
X1-3
C23,1 100n
C23 100n
C25 1000µ
T11 2SC5171
T15 2SC5200
T13 2SC5200
C14 30p
R21 1k
R27 2k2
C18 100n
T6 KT817G
220n
C19
R32 22
R33 22
C170 1µ
MBR20200
D1
D2
D3
D4
J3 OUT
R34 10
C27 100n
J4 GND
X1-2
T14 2SA1943
T16 2SA1943
T12 2SA1930
AGND
X2-1 IN
X2-2
C1 2.2µ
R1 2k2
R2 51k
IC1
AD845
R11 2k4
R6 120
R12 2k4
C3 22p
R3 2k2
R5 62k
R19 180
R20 180
R22 1k
R28 1k
C15 30p
C20 160p
T2 2N5401
R17 5k1
C13 3,3p
T40 2N5551
T8 2SC3955
C7 100n
C9 10µ
2K4 R10
C11 100n
C5 47µ
240 R8
VR2
R14 750
R18 390
C17 470µ
R24 10
R26 10
C24,1 100n
C24 100n
C26 1000µ
X1-1
LM337T
UM1-1
01.08.2012 20:19:46
Sheet: 1/1

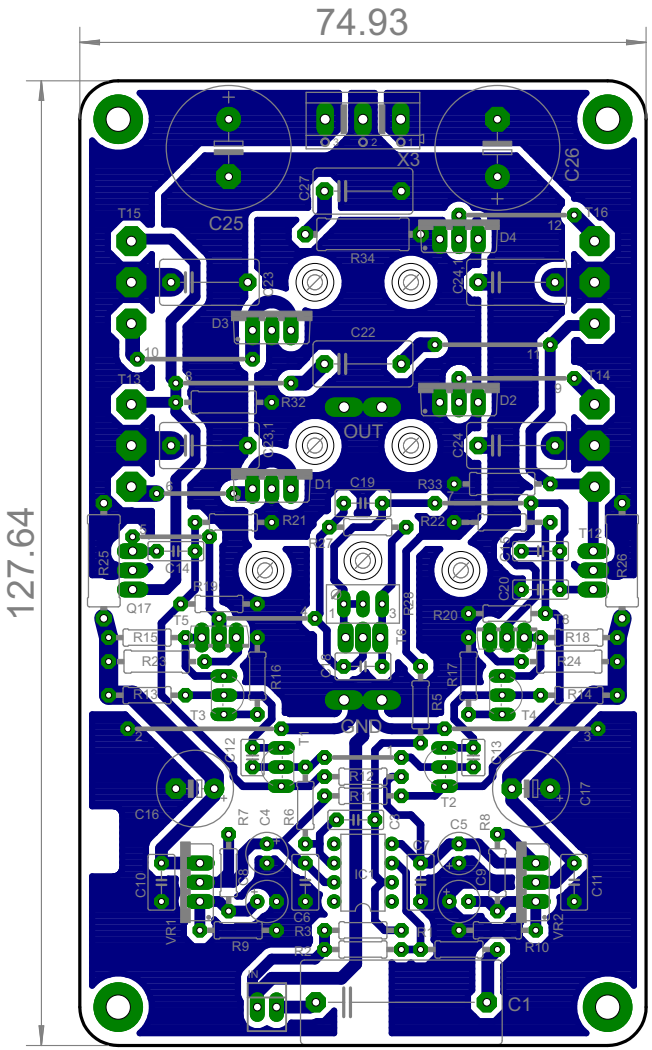
74.93
127.64
C25
C26
X3
C27
T15
T16
D4
R34
C23
C24
D3
C22
T13
T14
D2
R32
OUT
C23.1
D1
C19
R33
R21
R22
R25
R26
C14
C20
Q17
R20
R15
R18
R23
R24
R12
R14
T3
T4
R16
R17
R5
GND
C12
C13
C16
C17
R7
C4
R6
T2
C5
R8
C10
C11
VR1
VR2
R9
R10
C6
C9
C1

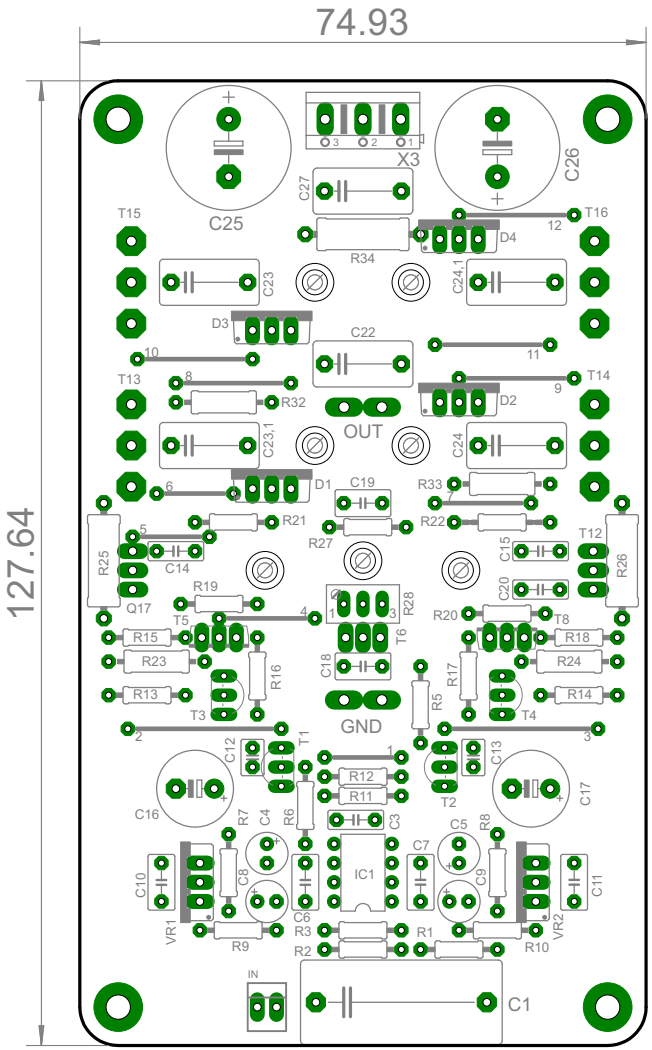
74.93
127.64
X3
C25
C26
C27
R34
D4
T15
T16
C23
C24,1
D3
C22
T13
T14
R32
D2
OUT
C23,1
C24
D1
C19
R33
R21
R22
R27
R25
R26
C14
C15
T12
R19
C20
Q17
R28
R20
T5
T8
T6
R15
R18
R23
R24
C18
R16
R17
R13
R14
R5
T3
T4
GND
T1
C12
C13
R12
R11
T2
C16
C17
R7
C4
R6
C3
C5
R8
C7
IC1
C10
C8
C9
C11
VR1
VR2
R9
C6
R3
R1
R10
R2
IN
C1

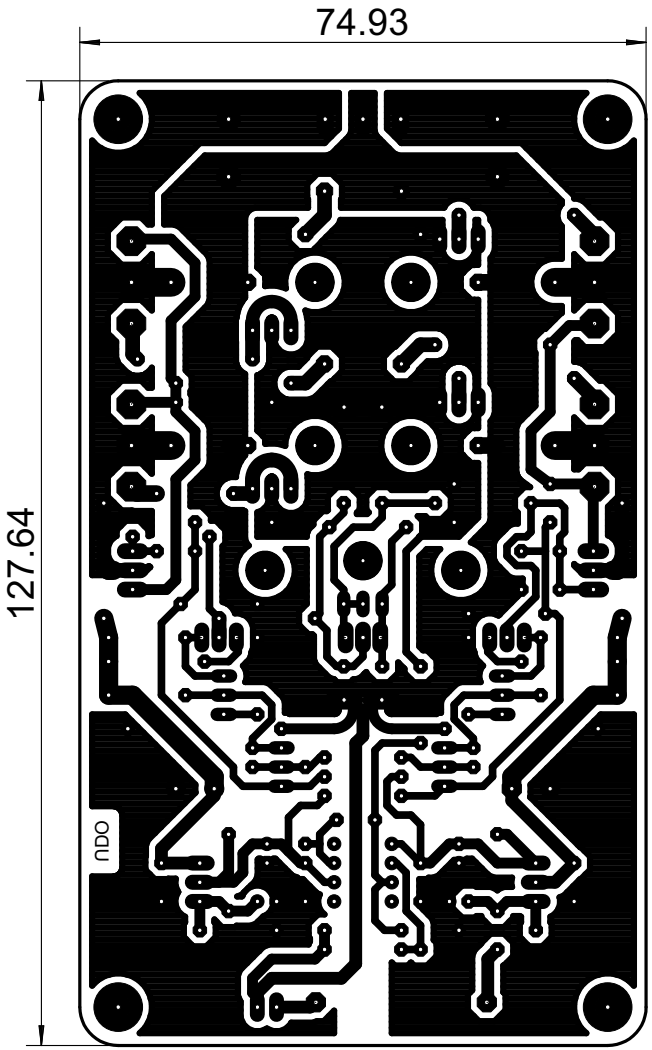
127.64
74.93
ΩDO

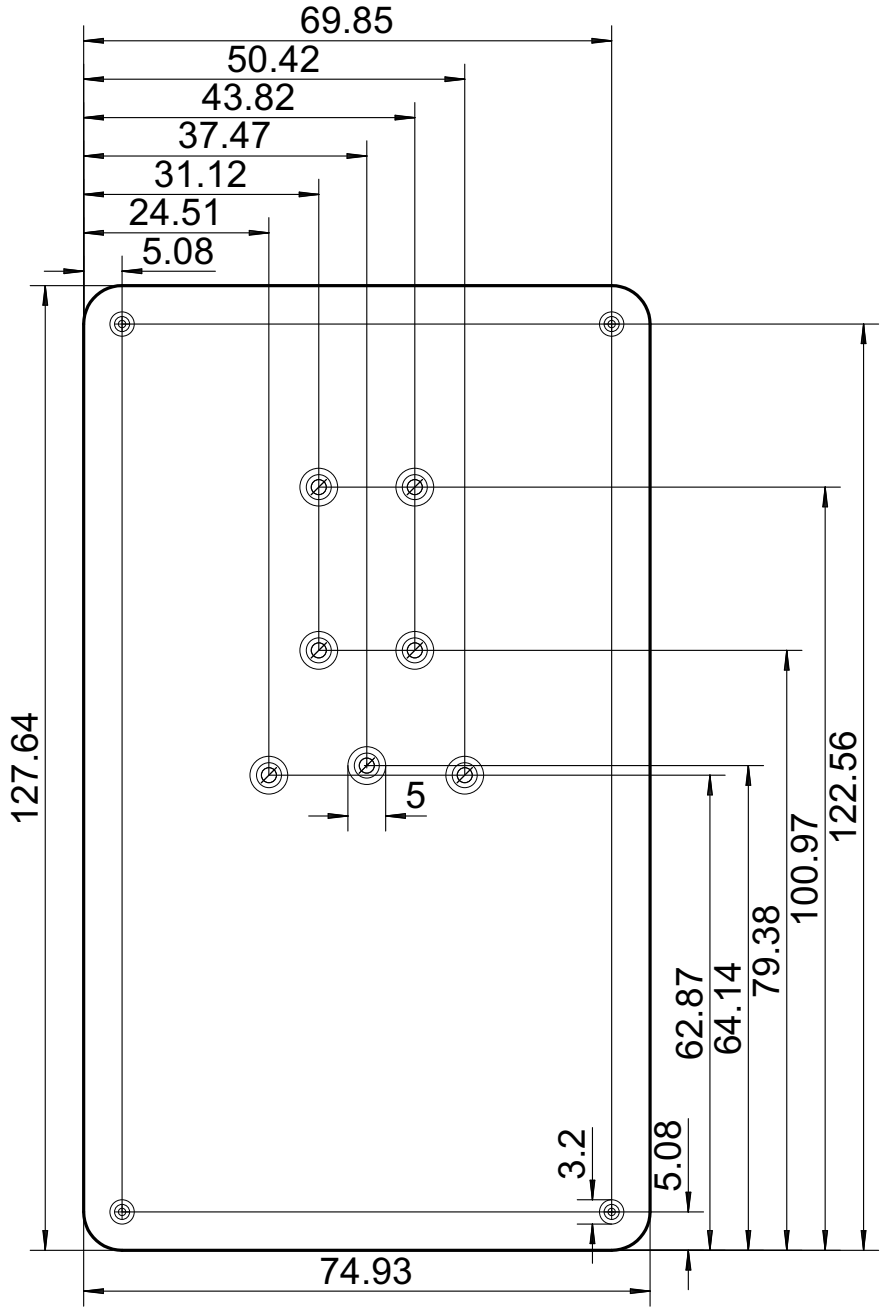
69.85
50.42
43.82
37.47
31.12
24.51
5.08
127.64
5
122.56
100.97
79.38
64.14
62.87
5.08
3.2
74.93