EH 9V Electric Mistress

For personal use only!

Thanks to Stephen and Francisco for providing the schematics !!

Power Supply: 9V; works also nicely at 12V (will need a >12V Zener though)

Note: R23 is shorted by ps jack if no ps is connected!!

Note: C2 with 470µ, C1 with 1000µ and C3 with 100µ works nicely too without clock noise.

Note: The send return pads might be use for adding a TZF option. If not needed connect with a jumper.

Note: R5 can be replaced by a jumper

Note: C4 and C21 were added instead of the original 39n

Note: C15 and C20 were added instead of the original 82n

Note: R7, R42 and R8 are like in a unit modified by EH to reduce volume drop R6 was added as pull down resistor for TBP switching, but is probably useless.

Note: add J8 to connect lugs 1 and 3 like in the original unit.

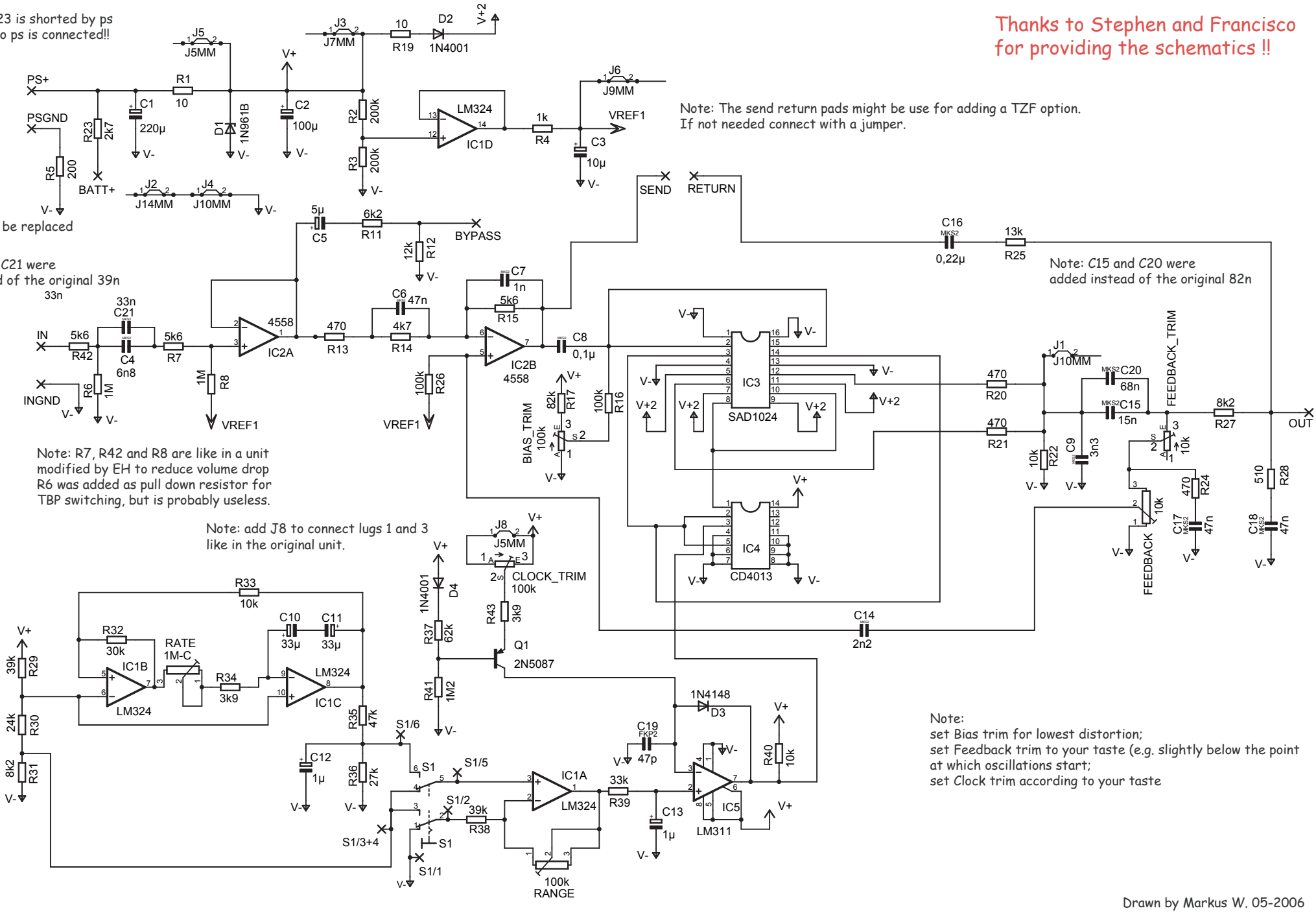

Drawn by Markus W. 05-2006
Minor updates 06-2006

Resistors	**Polars**
---------	----------
2 - 10R	1 - 1u (tantalum)
1 - 200R	1 - 1u
4 - 470R	1 - 5u
1 - 510R	1 - 10u
1 - 1k	2 - 33u (tantalum)
1 - 2k7	1 - 100u
2 - 3k9	1 - 220u
1 - 4k7	
3 - 5k6	**Diodes**
1 - 6k2	------
2 - 8k2	
3 - 10k	1 - 1N961B
1 - 12k	2 - 1N4001
1 - 13k	1 - 1N4148
1 - 24k	
1 - 27k	**Transistors**
1 - 30k	----------
1 - 33k	
2 - 39k	1 - 2N5087
1 - 47k	
1 - 62k	**IC**
1 - 82k	----------
2 - 100k	
2 - 200k	1 - CD4013 (14)
2 - 1M	1 - SAD1024 (16)
1 - 1M2	1 - LM311 (8)
	1 - 4558 (8)
Film caps	1 - LM324 (14)

	Pots
1 - 47p	----------
1 - 1n	1 - 1M C
1 - 2n2	1 – 100k lin
1 - 3n3	1 – 10k lin
1 - 6n8	
1 - 15n	**Trim pots**
1 - 33n	--------
3 - 47n	
1 - 68n	1 - 10k
1 - 100n	2 - 100k
1 - 220n	

117mm

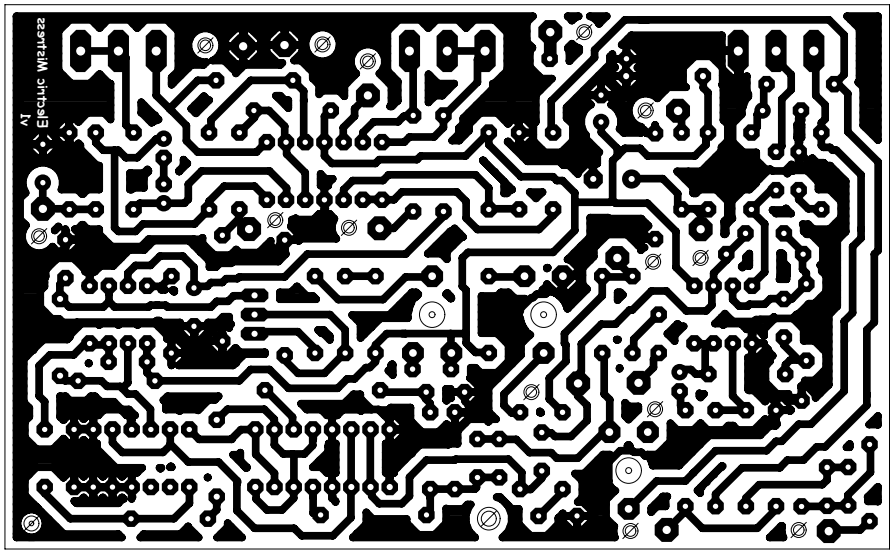

72 mm

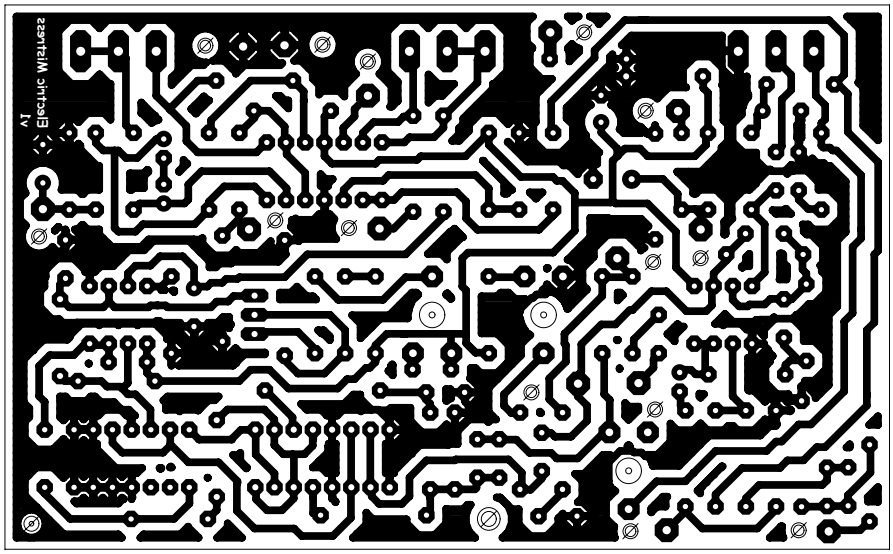

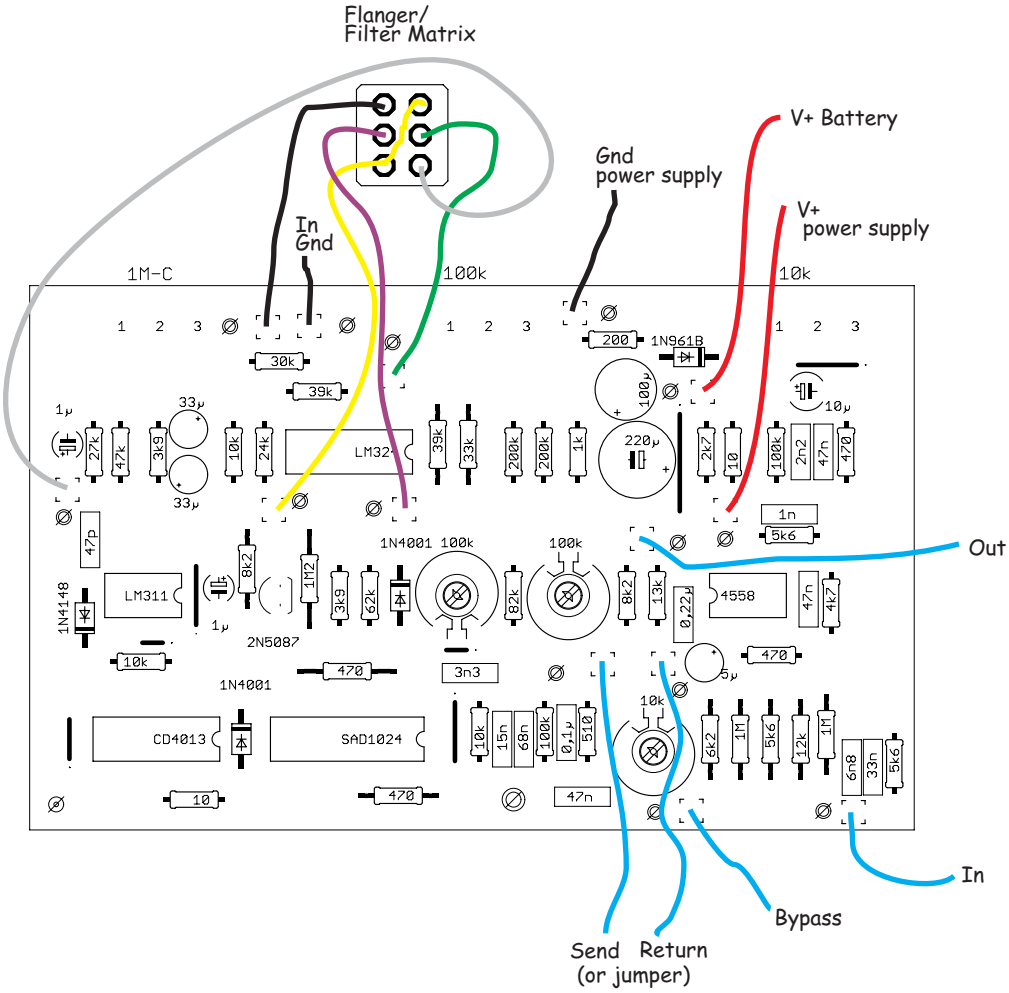
Flanger/
Filter Matrix
In
Gnd
Gnd
power supply
V+ Battery
V+
power supply
1M-C
100k
10k
Out
In
Bypass
Send
(or jumper)
Return

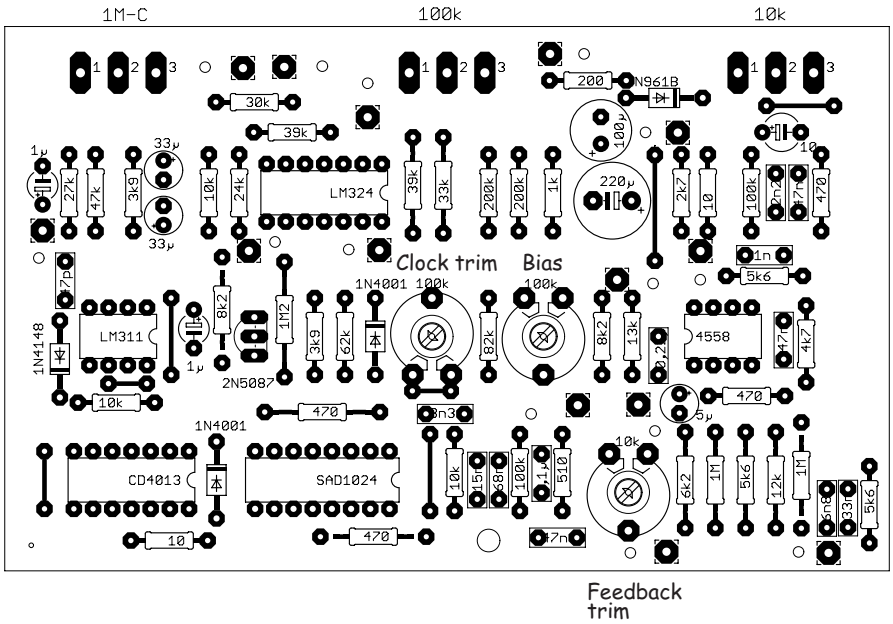
1M-C
100k
10k
Clock trim
Bias
Feedback
trim