MOTOROLA

# LM324, LM324A, LM224, LM2902

## QUAD DIFFERENTIAL INPUT OPERATIONAL AMPLIFIERS

**SEMICONDUCTOR TECHNICAL DATA**

# Quad Low Power Operational Amplifiers

The LM324 series are low–cost, quad operational amplifiers with true differential inputs. They have several distinct advantages over standard operational amplifier types in single supply applications. The quad amplifier can operate at supply voltages as low as 3.0 V or as high as 32 V with quiescent currents about one–fifth of those associated with the MC1741 (on a per amplifier basis). The common mode input range includes the negative supply, thereby eliminating the necessity for external biasing components in many applications. The output voltage range also includes the negative power supply voltage.

- Short Circuited Protected Outputs
- True Differential Input Stage
- Single Supply Operation: 3.0 V to 32 V
- Low Input Bias Currents: 100 nA Maximum (LM324A)
- Four Amplifiers Per Package
- Internally Compensated
- Common Mode Range Extends to Negative Supply
- Industry Standard Pinouts
- ESD Clamps on the Inputs Increase Ruggedness without Affecting Device Operation

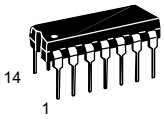


**N SUFFIX**
PLASTIC PACKAGE
CASE 646
(LM224, LM324, LM2902 Only)

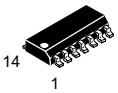


**D SUFFIX**
PLASTIC PACKAGE
CASE 751A
(SO–14)

**PIN CONNECTIONS**

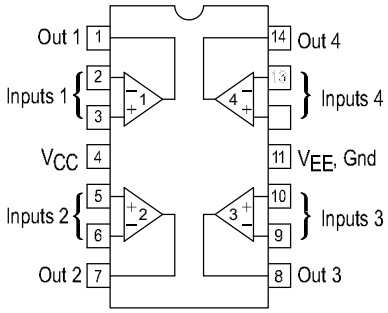


(Top View)

**MAXIMUM RATINGS** ($T_A$ = +25°C, unless otherwise noted.)

| Rating | Symbol | LM224 LM324,A | LM2902 | Unit |
|---|---|---|---|---|
| Power Supply Voltages<br>Single Supply<br>Split Supplies | <br>$V_{CC}$<br>$V_{CC}$, $V_{EE}$ | <br>32<br>±16 | <br>26<br>±13 | Vdc |
| Input Differential Voltage Range (See Note 1) | $V_{IDR}$ | ±32 | ±26 | Vdc |
| Input Common Mode Voltage Range | $V_{ICR}$ | –0.3 to 32 | –0.3 to 26 | Vdc |
| Output Short Circuit Duration | $t_{SC}$ | Continuous | | |
| Junction Temperature | $T_J$ | 150 | | °C |
| Storage Temperature Range | $T_{stg}$ | –65 to +150 | | °C |
| Operating Ambient Temperature Range | $T_A$ | –25 to +85<br>0 to +70 | –40 to +105 | °C |

NOTE: 1. Split Power Supplies.

**ORDERING INFORMATION**

| Device | Operating Temperature Range | Package |
|---|---|---|
| LM2902D | $T_A$ = –40 to +105°C | SO–14 |
| LM2902N | | Plastic DIP |
| LM224D | $T_A$ = –25 to +85°C | SO–14 |
| LM224N | | Plastic DIP |
| LM324AD | $T_A$ = 0 to +70°C | SO–14 |
| LM324AN | | Plastic DIP |
| LM324D | | SO–14 |
| LM324N | | Plastic DIP |

Motorola, Inc. 1995