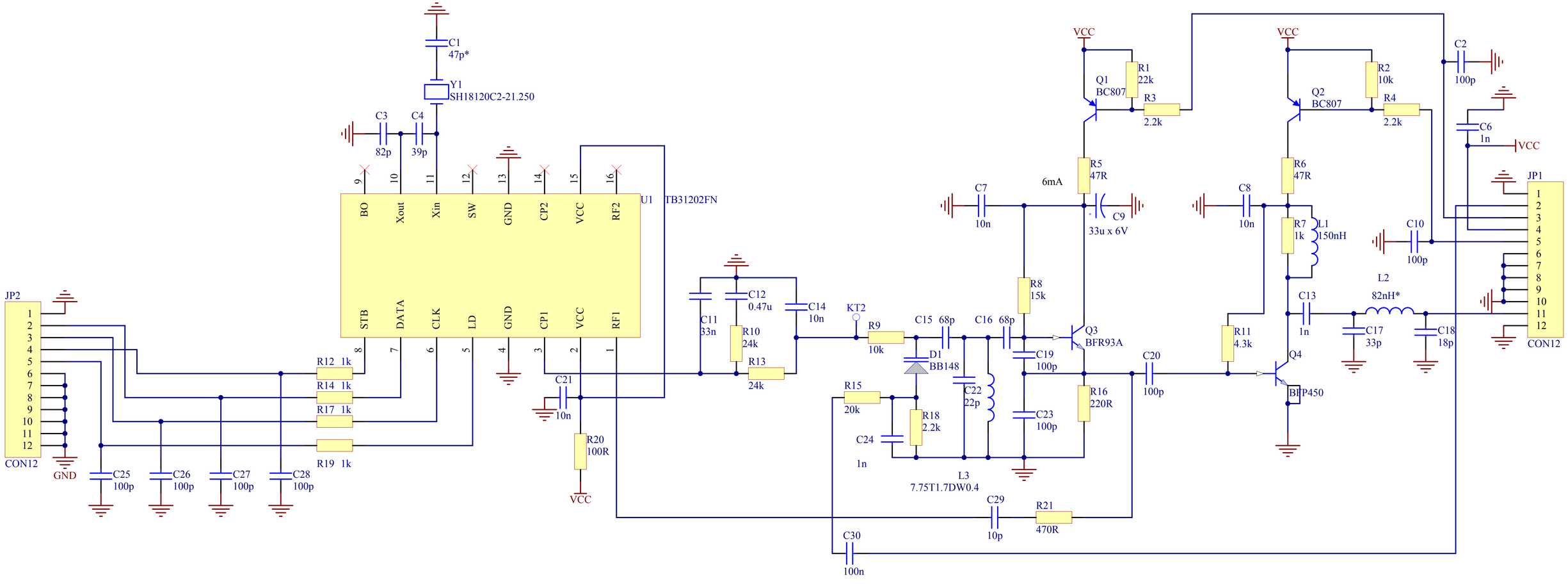
C1
47p*
Y1
SH18120C2-21.250
C3
82p
C4
39p
U1
TB31202FN
BO
Xout
Xin
SW
GND
CP2
VCC
RF2
STB
DATA
CLK
LD
GND
CP1
VCC
RF1
JP2
CON12
GND
R12 1k
R14 1k
R17 1k
R19 1k
C25
100p
C26
100p
C27
100p
C28
100p
C21
10n
R20
100R
VCC
C11
33n
C12
0.47u
R10
24k
R13
24k
C14
10n
KT2
R9
10k
C15 68p
C16 68p
D1
BB148
R15
20k
R18
2.2k
C24
1n
C22
22p
L3
7.75T1.7DW0.4
C29
10p
R21
470R
C30
100n
VCC
Q1
BC807
R1
22k
R3
2.2k
R5
47R
6mA
C7
10n
C9
33u x 6V
R8
15k
Q3
BFR93A
C19
100p
C23
100p
R16
220R
C20
100p
VCC
Q2
BC807
R2
10k
R4
2.2k
R6
47R
C8
10n
R7
1k
L1
150nH
C10
100p
L2
82nH*
C13
1n
C17
33p
C18
18p
R11
4.3k
Q4
BFP450
C2
100p
C6
1n
VCC
JP1
CON12