DATA SHEET

TDA8922
2 × 25 W class-D power amplifier

Objective specification

2003 Mar 20

Philips
Semiconductors

PHILIPS

CONTENTS

1 FEATURES
2 APPLICATIONS
3 GENERAL DESCRIPTION
4 QUICK REFERENCE DATA
5 ORDERING INFORMATION
6 BLOCK DIAGRAM
7 PINNING
8 FUNCTIONAL DESCRIPTION
8.1 General
8.2 Pulse width modulation frequency
8.3 Protections
8.3.1 Overtemperature
8.3.2 Short-circuit across loudspeaker terminals and to supply lines
8.3.3 Start-up safety test
8.3.4 Supply voltage alarm
8.4 Differential audio inputs
9 LIMITING VALUES
10 THERMAL CHARACTERISTICS
11 QUALITY SPECIFICATION
12 STATIC CHARACTERISTICS
13 SWITCHING CHARACTERISTICS
14 DYNAMIC AC CHARACTERISTICS (STEREO AND DUAL SE APPLICATION)
15 DYNAMIC AC CHARACTERISTICS (MONO BTL APPLICATION)
16 APPLICATION INFORMATION
16.1 BTL application
16.2 Pin MODE
16.3 Output power estimation
16.4 External clock
16.5 Heatsink requirements
16.6 Output current limiting
16.7 Pumping effects
16.8 Reference design
16.9 PCB information for HSOP24 package
16.10 Classification
16.11 Bill of materials for reference design
16.12 Curves measured in reference design
16.13 Application schematics
17 PACKAGE OUTLINE
18 SOLDERING
18.1 Introduction
18.2 Through-hole mount packages
18.2.1 Soldering by dipping or by solder wave
18.2.2 Manual soldering
18.3 Surface mount packages
18.3.1 Reflow soldering
18.3.2 Wave soldering
18.3.3 Manual soldering
18.4 Suitability of IC packages for wave, reflow and dipping soldering methods
19 DATA SHEET STATUS
20 DEFINITIONS
21 DISCLAIMERS

1 FEATURES

- High efficiency (~90%)
- Operating supply voltage from ±12.5 to ±30 V
- Very low quiescent current
- Low distortion
- Usable as a stereo Single-Ended (SE) amplifier or as a mono amplifier in Bridge-Tied Load (BTL)
- Fixed gain of 30 dB in Single-Ended (SE) and 36 dB in Bridge-Tied Load (BTL)
- High output power
- Good ripple rejection
- Internal switching frequency can be overruled by an external clock
- No switch-on or switch-off plop noise
- Short-circuit proof across load and to supply lines
- Electrostatic discharge protection
- Thermally protected.

2 APPLICATIONS

- Television sets
- Home-sound sets
- Multimedia systems
- All mains fed audio systems
- Car audio (boosters).

3 GENERAL DESCRIPTION

The TDA8922 is a high efficiency class-D audio power amplifier with very low dissipation. The typical output power is 2 × 25 W.

The device is available in the HSOP24 power package with a small internal heatsink and in the DBS23P through-hole power package. Depending on the supply voltage and load conditions, a very small or even no external heatsink is required. The amplifier operates over a wide supply voltage range from ±12.5 to ±30 V and consumes a very low quiescent current.

4 QUICK REFERENCE DATA

SYMBOL	PARAMETER	CONDITIONS	MIN.	TYP.	MAX.	UNIT
General; V_P = ±20 V						
V_P	supply voltage		±12.5	±20	±30	V
$I_{q(tot)}$	total quiescent supply current	no load connected	–	55	75	mA
η	efficiency	P_o = 25 W; SE: R_L = 2 × 8 Ω; f_i = 1 kHz	–	90	–	%
Stereo single-ended configuration						
P_o	output power	R_L = 8 Ω; THD = 10%; V_P = ±20 V; note 1	22	25	–	W
		R_L = 4 Ω; THD = 10%; V_P = ±15 V; note 1	22	25	–	W
Mono bridge-tied load configuration						
P_o	output power	R_L = 8 Ω; THD = 10%; V_P = ±15 V; note 1	46	50	–	W

Note

1. See Section 16.5.

5 ORDERING INFORMATION

TYPE NUMBER	PACKAGE		
	NAME	DESCRIPTION	VERSION
TDA8922TH	HSOP24	plastic, heatsink small outline package; 24 leads; low stand-off height	SOT566-3
TDA8922J	DBS23P	plastic DIL-bent-SIL power package; 23 leads (straight lead length 3.2 mm)	SOT411-1

6 BLOCK DIAGRAM

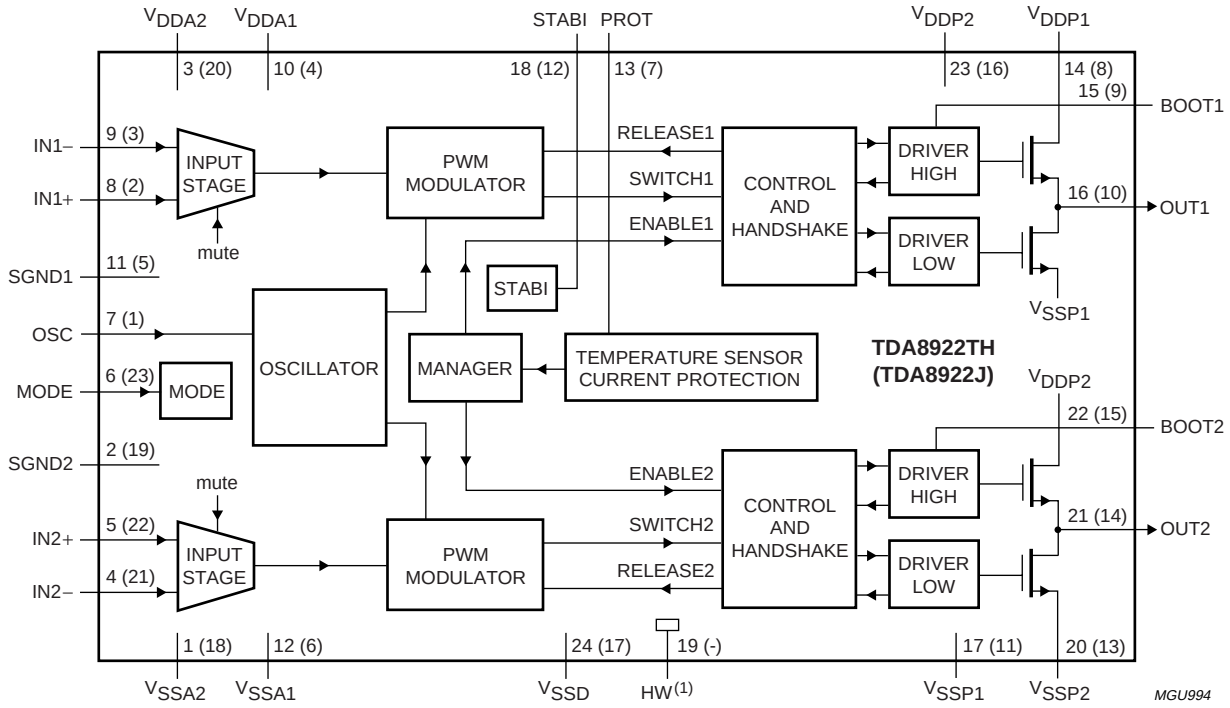

(1) Pin HW (TDA8922TH only) should be connected to pin V_{SSD} in the application.
Pin numbers in parenthesis refer to the TDA8922J.

Fig.1 Block diagram.

7 PINNING

SYMBOL	PIN		DESCRIPTION
	TDA8922TH	TDA8922J	
V_{SSA2}	1	18	negative analog supply voltage for channel 2
SGND2	2	19	signal ground for channel 2
V_{DDA2}	3	20	positive analog supply voltage for channel 2
IN2−	4	21	negative audio input for channel 2
IN2+	5	22	positive audio input for channel 2
MODE	6	23	mode selection input: standby, mute or operating
OSC	7	1	oscillator frequency adjustment or tracking input
IN1+	8	2	positive audio input for channel 1
IN1−	9	3	negative audio input for channel 1
V_{DDA1}	10	4	positive analog supply voltage for channel 1
SGND1	11	5	signal ground for channel 1
V_{SSA1}	12	6	negative analog supply voltage for channel 1
PROT	13	7	time constant capacitor for protection delay
V_{DDP1}	14	8	positive power supply voltage for channel 1
BOOT1	15	9	bootstrap capacitor for channel 1
OUT1	16	10	PWM output from channel 1
V_{SSP1}	17	11	negative power supply voltage for channel 1
STABI	18	12	decoupling of internal stabilizer for logic supply
HW	19	−	handle wafer; must be connected to pin V_{SSD}
V_{SSP2}	20	13	negative power supply voltage for channel 2
OUT2	21	14	PWM output from channel 2
BOOT2	22	15	bootstrap capacitor for channel 2
V_{DDP2}	23	16	positive power supply voltage for channel 2
V_{SSD}	24	17	negative digital supply voltage

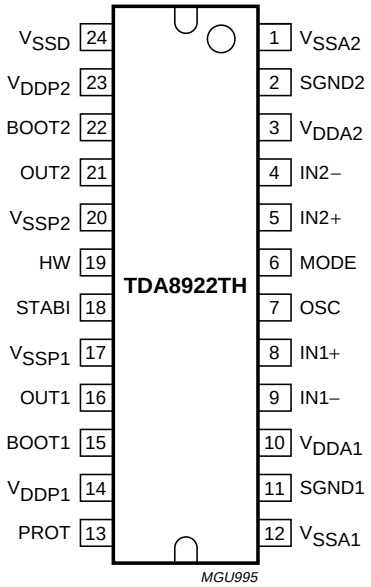

Fig.2 Pin configuration TDA8922TH.

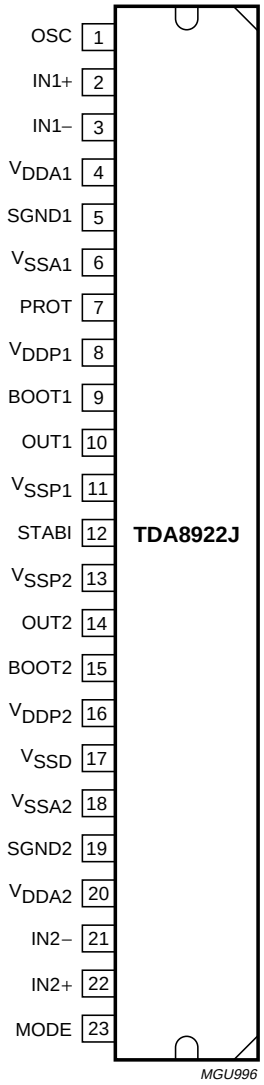

Fig.3 Pin configuration TDA8922J.

8 FUNCTIONAL DESCRIPTION

8.1 General

The TDA8922 is a two channel audio power amplifier using class-D technology. A detailed application reference design is shown in Fig.10. Typical application schematics are shown in Figs 37 and 38.

The audio input signal is converted into a digital Pulse Width Modulated (PWM) signal via an analog input stage and PWM modulator. To enable the output power transistors to be driven, this digital PWM signal is applied to a control and handshake block and driver circuits for both the high side and low side. In this way a level shift is performed from the low power digital PWM signal (at logic levels) to a high power PWM signal which switches between the main supply lines.

A 2nd-order low-pass filter converts the PWM signal to an analog audio signal across the loudspeakers.

The TDA8922 one-chip class-D amplifier contains high power D-MOS switches, drivers, timing and handshaking between the power switches and some control logic. For protection a temperature sensor and a maximum current detector are built-in.

The two audio channels of the TDA8922 contain two PWMs, two analog feedback loops and two differential input stages. It also contains circuits common to both channels such as the oscillator, all reference sources, the mode functionality and a digital timing manager.

The TDA8922 contains two independent amplifier channels with high output power, high efficiency (90%), low distortion and a low quiescent current. The amplifier channels can be connected in the following configurations:

- Mono Bridge-Tied Load (BTL) amplifier
- Stereo Single-Ended (SE) amplifiers.

The amplifier system can be switched in three operating modes with pin MODE:

- Standby mode; with a very low supply current
- Mute mode; the amplifiers are operational, but the audio signal at the output is suppressed
- Operating mode; the amplifiers fully are operational with output signal.

An example of a switching circuit for driving pin MODE is illustrated in Fig.4.

For suppressing plop noise, the amplifier will remain automatically in the mute mode for approximately 150 ms before switching to the operating mode (see Fig.5). During this time, the coupling capacitors at the input are fully charged.

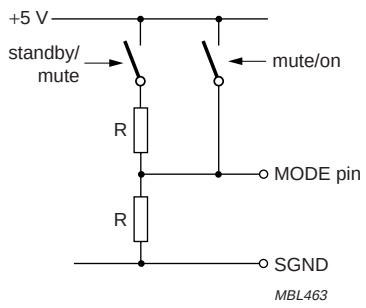

Fig.4 Example of mode selection circuit.

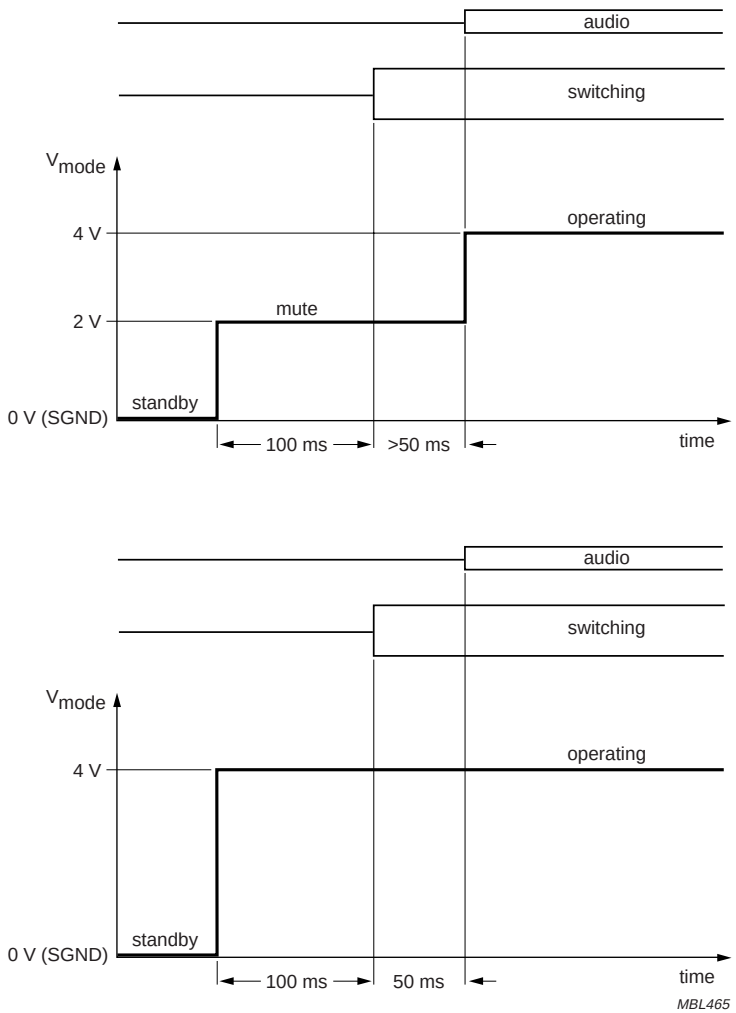

When switching from standby to mute, there is a delay of 100 ms before the output starts switching. The audio signal is available after V_{mode} has been set to operating, but not earlier than 150 ms after switching to mute.

When switching from standby to operating, there is a first delay of 100 ms before the outputs starts switching. The audio signal is available after a second delay of 50 ms.

Fig.5 Timing on mode selection input.

8.2 Pulse width modulation frequency

The output signal of the amplifier is a PWM signal with a carrier frequency of approximately 350 kHz. Using a 2nd-order LC demodulation filter in the application results in an analog audio signal across the loudspeaker.
This switching frequency is fixed by an external resistor R_{OSC} connected between pin OSC and V_{SSA}. With the resistor value given in the schematic diagram of the reference design, the carrier frequency is typical 350 kHz. The carrier frequency can be calculated using the following equation: $f_{osc} = \frac{9 \times 10^9}{R_{OSC}}$ Hz

If two or more class-D amplifiers are used in the same audio application, it is advisable to have all devices operating at the same switching frequency.

This can be realized by connecting all OSC pins together and feed them from a external central oscillator. Using an external oscillator it is necessary to force pin OSC to a DC-level above SGND for switching from the internal to an external oscillator. In this case the internal oscillator is disabled and the PWM will be switched on the external frequency. The frequency range of the external oscillator must be in the range as specified in the switching characteristics; see Chapter 13.

In an application circuit:

- Internal oscillator: R_{OSC} connected between pin OSC and V_{SSA}
- External oscillator: connect the oscillator signal between pins OSC and SGND; delete R_{OSC} and C_{OSC}.

8.3 Protections

Temperature, supply voltage and short-circuit protections sensors are included on the chip. In the event that the maximum current or maximum temperature is exceeded the system will shut down.

8.3.1 Overtemperature

If the junction temperature T_j > 150 °C, then the power stage will shut down immediately. The power stage will start switching again if the temperature drops to approximately 130 °C, thus there is a hysteresis of approximately 20 °C.

8.3.2 Short-circuit across loudspeaker terminals and to supply lines

When the loudspeaker terminals are short-circuited or if one of the demodulated outputs of the amplifier is short-circuited to one of the supply lines, this will be detected by the current protection. If the output current exceeds the maximum output current of 4 A, then the power stage will shut down within less than 1 μs and the high current will be switched off. In this state the dissipation is very low. Every 100 ms the system tries to restart again. If there is still a short-circuit across the loudspeaker load or to one of the supply lines, the system is switched off again as soon as the maximum current is exceeded. The average dissipation will be low because of this low duty cycle.

8.3.3 Start-up safety test

During the start-up sequence, when pin MODE is switched from standby to mute, the conditions at the output terminals of the power stage are checked. In the event of a short-circuit at one of the output terminals to V_{DD} or V_{SS} the start-up procedure is interrupted and the systems waits for open-circuit outputs. Because the test is done before enabling the power stages, no large currents will flow in the event of a short-circuit. This system protects for short-circuits at both sides of the output filter to both supply lines. When there is a short-circuit from the power PWM output of the power stage to one of the supply lines (before the demodulation filter) it will also be detected by the start-up safety test. Practical use of this test feature can be found in detection of short-circuits on the printed-circuit board.

Remark: This test is only operational prior to or during the start-up sequence, and not during normal operation.

During normal operation the maximum current protection is used to detect short-circuits across the load and with respect to the supply lines.

8.3.4 SUPPLY VOLTAGE ALARM

If the supply voltage drops below ±12.5 V, the undervoltage protection circuit is activated and the system will shut down correctly. If the internal clock is used, this switch-off will be silent and without plop noise. When the supply voltage rises above the threshold level, the system is restarted again after 100 ms. If the supply voltage exceeds ±32 V the overvoltage protection circuit is activated and the power stages will shut down. They are re-enabled as soon as the supply voltage drops below the threshold level.

An additional balance protection circuit compares the positive (V_{DD}) and the negative (V_{SS}) supply voltages and is triggered if the voltage difference between them exceeds a certain level. This level depends on the sum of both supply voltages. An expression for the unbalanced threshold level is as follows: $V_{th(unb)} \approx 0.15 \times (V_{DD} + V_{SS})$.

Example: With a symmetrical supply of ±30 V, the protection circuit will be triggered if the unbalance exceeds approximately 9 V; see Section 16.7.

8.4 Differential audio inputs

For a high common mode rejection ratio and a maximum of flexibility in the application, the audio inputs are fully differential. By connecting the inputs anti-parallel the phase of one of the channels can be inverted, so that a load can be connected between the two output filters. In this case the system operates as a mono BTL amplifier and with the same loudspeaker impedance an approximately four times higher output power can be obtained.

The input configuration for a mono BTL application is illustrated in Fig.6; for more information see Chapter 16.

In the stereo single-ended configuration it is also recommended to connect the two differential inputs in anti-phase. This has advantages for the current handling of the power supply at low signal frequencies.

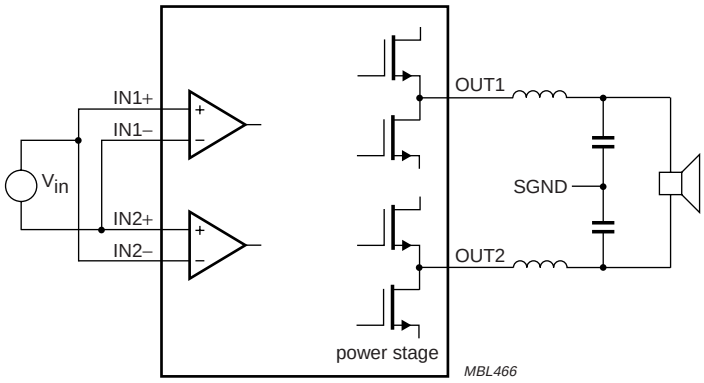

Fig.6 Input configuration for mono BTL application.

9 LIMITING VALUES

In accordance with the Absolute Maximum Rating System (IEC 60134).

SYMBOL	PARAMETER	CONDITIONS	MIN.	MAX.	UNIT
V_P	supply voltage		–	±30	V
V_{MODE}	input voltage on pin MODE	with respect to SGND	–	5.5	V
V_{sc}	short-circuit voltage on output pins		–	±30	V
I_{ORM}	repetitive peak current in output pin	note 1	–	4	A
T_{stg}	storage temperature		–55	+150	°C
T_{amb}	ambient temperature		–40	+85	°C
T_{vj}	virtual junction temperature		–	150	°C

Notes

1. See Section 16.6.

10 THERMAL CHARACTERISTICS

SYMBOL	PARAMETER	CONDITIONS	VALUE	UNIT
$R_{th(j-a)}$	thermal resistance from junction to ambient	in free air; note 1		
	TDA8922TH		35	K/W
	TDA8922J		35	K/W
$R_{th(j-c)}$	thermal resistance from junction to case	note 1		
	TDA8922TH		1.3	K/W
	TDA8922J		1.3	K/W

Note

1. See Section 16.5.

11 QUALITY SPECIFICATION

In accordance with *"General Quality Specification for Integrated Circuits: SNW-FQ-611D"* if this device is used as an audio amplifier.

12 STATIC CHARACTERISTICS

V_P = ±25 V; T_{amb} = 25 °C; measured in Fig.10; unless otherwise specified.

SYMBOL	PARAMETER	CONDITIONS	MIN.	TYP.	MAX.	UNIT
Supply						
V_P	supply voltage	note 1	±12.5	±20	±30	V
$I_{q(tot)}$	total quiescent supply current	no load connected	–	55	75	mA
I_{stb}	standby supply current		–	100	500	µA
Mode select input; pin MODE						
V_{MODE}	input voltage	note 2	0	–	5.5	V
I_{MODE}	input current	V_{MODE} = 5.5 V	–	–	1000	µA
V_{stb}	input voltage for standby mode	notes 2 and 3	0	–	0.8	V
V_{mute}	input voltage for mute mode	notes 2 and 3	2.2	–	3.0	V
V_{on}	input voltage for operating mode	notes 2 and 3	4.2	–	5.5	V
Audio inputs; pins IN1–, IN1+, IN2+ and IN2–						
V_I	DC input voltage	note 2	–	0	–	V
Amplifier outputs; pins OUT1 and OUT2						
$\lvert V_{OO(SE)} \rvert$	output offset voltage	SE; operating and mute	–	–	150	mV
$\lvert \Delta V_{OO(SE)} \rvert$	variation of output offset voltage	SE; operating ↔ mute	–	–	80	mV
$\lvert V_{OO(BTL)} \rvert$	output offset voltage	BTL; operating and mute	–	–	215	mV
$\lvert \Delta V_{OO(BTL)} \rvert$	variation of output offset voltage	BTL; operating ↔ mute	–	–	115	mV
Stabilizer output; pin STABI						
$V_{o(stab)}$	stabilizer output voltage	mute and operating; note 4	11	13	15	V
Temperature protection						
T_{prot}	temperature protection activation		150	–	–	°C
T_{hys}	hysteresis on temperature protection		–	20	–	°C

Notes

1. The circuit is DC adjusted at V_P = ±12.5 to ±30 V.
2. With respect to SGND (0 V).
3. The transition regions between standby, mute and operating mode contain hysteresis (see Fig.7).
4. With respect to V_{SSP1}.

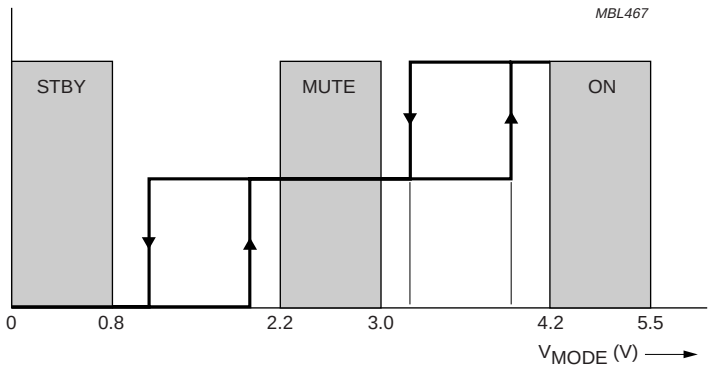

Fig.7 Behaviour of mode selection pin MODE.

13 SWITCHING CHARACTERISTICS

V_{DD} = ±25 V; T_{amb} = 25 °C; measured in Fig.10; unless otherwise specified.

SYMBOL	PARAMETER	CONDITIONS	MIN.	TYP.	MAX.	UNIT
Internal oscillator						
f_{osc}	typical internal oscillator frequency	R_{OSC} = 30.0 kΩ	290	317	344	kHz
$f_{osc(int)}$	internal oscillator frequency range	note 1	210	–	600	kHz
External oscillator or frequency tracking						
V_{OSC}	voltage on pin OSC		SGND + 4.5	SGND + 5	SGND + 6	V
$V_{OSC(trip)}$	trip level for tracking on pin OSC		–	SGND + 2.5	–	V
f_{track}	frequency range for tracking		210	–	600	kHz
$V_{P(OSC)(ext)}$	minimum symmetrical supply voltage for external oscillator application		15	–	–	V

Note

1. Frequency set with R_{OSC} according to the formula in Section 8.2.

14 DYNAMIC AC CHARACTERISTICS (STEREO AND DUAL SE APPLICATION)

V_P = ±20 V; R_L = 8 Ω; f_i = 1 kHz; f_{osc} = 310 kHz; R_{sL} < 0.1 Ω (note 1); T_{amb} = 25 °C; measured in Fig.10; unless otherwise specified.

SYMBOL	PARAMETER	CONDITIONS	MIN.	TYP.	MAX.	UNIT
P_o	output power	R_L = 8 Ω; V_P = ±20 V; note 2				
		THD = 0.5%	18	20	–	W
		THD = 10%	22	25	–	W
		R_L = 8 Ω; V_P = ±25 V; note 2				
		THD = 0.5%	29	33	–	W
		THD = 10%	36	40	–	W
		R_L = 4 Ω; V_P = ±15 V; note 2				
		THD = 0.5%	18	20	–	W
		THD = 10%	22	25	–	W
THD	total harmonic distortion	P_o = 1 W; note 3				
		f_i = 1 kHz	–	0.02	0.05	%
		f_i = 10 kHz	–	0.15	–	%
$G_{v(cl)}$	closed loop voltage gain		29	30	31	dB
η	efficiency	P_o = 25 W; f_i = 1 kHz; note 4	85	90	–	%
SVRR	supply voltage ripple rejection	operating; note 5				
		f_i = 100 Hz	–	55	–	dB
		f_i = 1 kHz	40	50	–	dB
		mute; f_i = 100 Hz; note 5	–	55	–	dB
		standby; f_i = 100 Hz; note 5	–	80	–	dB
$\|Z_i\|$	input impedance		45	68	–	kΩ
$V_{n(o)}$	noise output voltage	operating				
		R_s = 0 Ω; note 6	–	200	400	μV
		R_s = 10 kΩ; note 7	–	230	–	μV
		mute; note 8	–	220	–	μV
α_{cs}	channel separation	note 9	–	70	–	dB
$\|\Delta G_v\|$	channel unbalance		–	–	1	dB
$V_{o(mute)}$	output signal in mute	note 10	–	–	400	μV
CMRR	common mode rejection ratio	$V_{i(CM)}$ = 1 V (RMS)	–	75	–	dB

Notes

1. R_{sL} is the series resistance of inductor of low-pass LC filter in the application.
2. Output power is measured indirectly; based on R_{DSon} measurement.
3. Total harmonic distortion is measured in a bandwidth of 22 Hz to 22 kHz. When distortion is measured using a lower order low-pass filter a significantly higher value is found, due to the switching frequency outside the audio band. Maximum limit is guaranteed but may not be 100% tested.
4. Output power measured across the loudspeaker load.
5. $V_{ripple} = V_{ripple(max)}$ = 2 V (p-p); R_s = 0 Ω.
6. B = 22 Hz to 22 kHz; R_s = 0 Ω; maximum limit is guaranteed, but may not be 100% tested.
7. B = 22 Hz to 22 kHz; R_s = 10 kΩ.

8. B = 22 Hz to 22 kHz; independent of R_S.
9. P_o = 1 W; R_S = 0 Ω; f_i = 1 kHz.
10. $V_i = V_{i(max)}$ = 1 V (RMS); maximum limit is guaranteed, but may not be 100% tested.

15 DYNAMIC AC CHARACTERISTICS (MONO BTL APPLICATION)

V_P = ±15 V; R_L = 8 Ω; f_i = 1 kHz; f_{osc} = 310 kHz; R_{sL} < 0.1 Ω (note 1); T_{amb} = 25 °C; measured in Fig.10; unless otherwise specified.

SYMBOL	PARAMETER	CONDITIONS	MIN.	TYP.	MAX.	UNIT
P_o	output power	R_L = 8 Ω; V_P = ±15 V; note 2				
		THD = 0.5%	37	40	–	W
		THD = 10%	46	50	–	W
THD	total harmonic distortion	P_o = 1 W; note 3				
		f_i = 1 kHz	–	0.015	0.05	%
		f_i = 10 kHz	–	0.02	–	%
$G_{v(cl)}$	closed loop voltage gain		35	36	37	dB
η	efficiency	P_o = 50 W; f_i = 1 kHz; note 4	85	90	–	%
SVRR	supply voltage ripple rejection	operating; note 5				
		f_i = 100 Hz	–	49	–	dB
		f_i = 1 kHz	36	44	–	dB
		mute; f_i = 100 Hz; note 5	–	49	–	dB
		standby; f_i = 100 Hz; note 5	–	80	–	dB
$\|Z_i\|$	input impedance		22	34	–	kΩ
$V_{n(o)}$	noise output voltage	operating				
		R_S = 0 Ω; note 6	–	280	560	μV
		R_S = 10 kΩ; note 7	–	300	–	μV
		mute; note 8	–	280	–	μV
$V_{o(mute)}$	output signal in mute	note 9	–	–	500	μV
CMRR	common mode rejection ratio	$V_{i(CM)}$ = 1 V (RMS)	–	75	–	dB

Notes

1. R_{sL} is the series resistance of inductor of low-pass LC filter in the application.
2. Output power is measured indirectly; based on R_{DSon} measurement.
3. Total harmonic distortion is measured in a bandwidth of 22 Hz to 22 kHz. When distortion is measured using a low order low-pass filter a significant higher value will be found, due to the switching frequency outside the audio band. Maximum limit is guaranteed but may not be 100% tested.
4. Output power measured across the loudspeaker load.
5. $V_{ripple} = V_{ripple(max)}$ = 2 V (p-p); R_S = 0 Ω.
6. B = 22 Hz to 22 kHz; R_S = 0 Ω; maximum limit is guaranteed, but may not be 100% tested.
7. B = 22 Hz to 22 kHz; R_S = 10 kΩ.
8. B = 22 Hz to 22 kHz; independent of R_S.
9. $V_i = V_{i(max)}$ = 1 V (RMS); f_i = 1 kHz; maximum limit is guaranteed, but may not be 100% tested.

16 APPLICATION INFORMATION

16.1 BTL application

When using the power amplifier in a mono BTL application (for more output power), the inputs of both channels must be connected in parallel and the phase of one of the inputs must be inverted (see Fig.6). In principle the loudspeaker can be connected between the outputs of the two single-ended demodulation filters.

16.2 Pin MODE

For correct operation the switching voltage at pin MODE should be debounced. If pin MODE is driven by a mechanical switch an appropriate debouncing low-pass filter should be used. If pin MODE is driven by an electronic circuit or microcontroller then it should remain at the mute voltage level for at least 100 ms before switching back to the standby voltage level.

16.3 Output power estimation

The output power in several applications (SE and BTL) can be estimated using the following expressions:

$$\text{SE: } P_{o(1\%)} = \frac{\left[\frac{R_L}{R_L + 0.6} \times V_P \times (1 - t_{min} \times f_{osc})\right]^2}{2 \times R_L}$$

Maximum current:

$$I_{o(peak)} = \frac{V_P \times (1 - t_{min} \times f_{osc})}{R_L + 0.6} \text{ should not exceed 4 A.}$$

$$\text{BTL: } P_{o(1\%)} = \frac{\left[\frac{R_L}{R_L + 1.2} \times 2V_P \times (1 - t_{min} \times f_{osc})\right]^2}{2 \times R_L}$$

Maximum current:

$$I_{o(peak)} = \frac{2V_P \times (1 - t_{min} \times f_{osc})}{R_L + 1.2} \text{ should not exceed 4 A.}$$

Legend:

R_L = load impedance

f_{osc} = oscillator frequency

t_{min} = minimum pulse width (typical 190 ns)

V_P = single-sided supply voltage (so, if supply is ±30 V symmetrical, then V_P = 30 V)

$P_{o(1\%)}$ = output power just at clipping

$P_{o(10\%)}$ = output power at THD = 10%

$P_{o(10\%)} = 1.25 \times P_{o(1\%)}$.

16.4 External clock

The minimum required symmetrical supply voltage for external clock application is ±15 V (equally, the minimum asymmetrical supply voltage for applications with an external clock is 30 V).

When using an external clock the following accuracy of the duty cycle of the external clock has to be taken into account: 47.5% < δ < 52.5%.

A possible solution for an external clock oscillator circuit is illustrated in Fig.8.

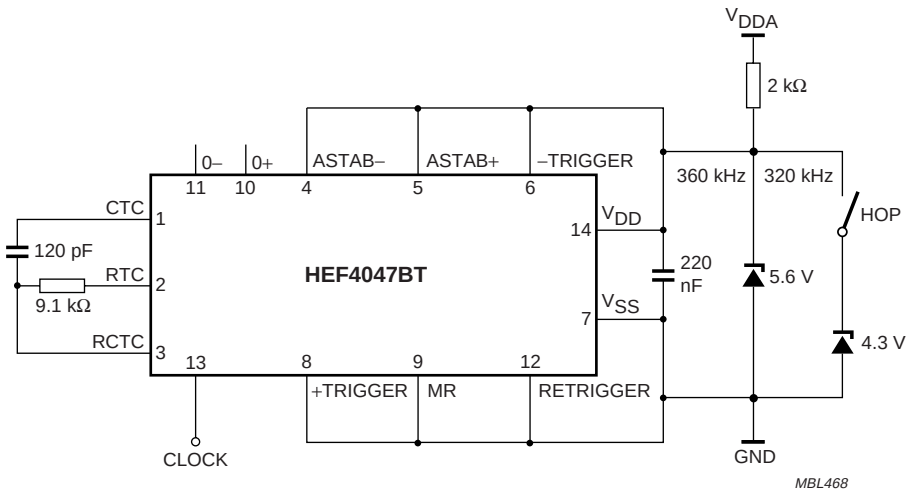

Fig.8 External oscillator circuit.

16.5 Heatsink requirements

In some applications it may be necessary to connect an external heatsink to the TDA8922. The determining factor is the 150 °C maximum junction temperature $T_{j(max)}$ which cannot be exceeded. The expression below shows the relationship between the maximum allowable power dissipation and the total thermal resistance from junction to ambient:

$$R_{th(j-a)} = \frac{T_{j(max)} - T_{amb}}{P_{diss}}$$

P_{diss} is determined by the efficiency (η) of the TDA8922. The efficiency measured in the TDA8922 as a function of output power is given in Fig.19. The power dissipation can be derived as function of output power (see Fig.18).

The derating curves (given for several values of the $R_{th(j-a)}$) are illustrated in Fig.9. A maximum junction temperature T_j = 150 °C is taken into account. From Fig.9 the maximum allowable power dissipation for a given heatsink size can be derived or the required heatsink size can be determined at a required dissipation level.

Example 1:

P_o = 2 × 25 W into 8 Ω

$T_{j(max)}$ = 150 °C

T_{amb} = 60 °C

$P_{diss(tot)}$ = 4.2 W (from Fig.18)

The required $R_{th(j-a)}$ = 21.4 K/W can be calculated.

The $R_{th(j-a)}$ of the TDA8922 in free air is 35 K/W; the $R_{th(j-c)}$ of the TDA8922 is 1.3 K/W, thus a heatsink of 20.1 K/W is required for this example.

In actual applications, other factors such as the average power dissipation with music source (as opposed to a continuous sine wave) will determine the size of the heatsink required.

Example 2:

P_o = 2 × 25 W into 4 Ω

$T_{j(max)}$ = 150 °C

T_{amb} = 60 °C

$P_{diss(tot)}$ = 5.5 W (from Fig.18)

The required $R_{th(j-a)}$ = 16.4 K/W.

The $R_{th(j-a)}$ of the TDA8922 in free air is 35 K/W; the $R_{th(j-c)}$ of the TDA8922 is 1.3 K/W, thus a heatsink of 15.1 K/W is required for this example.

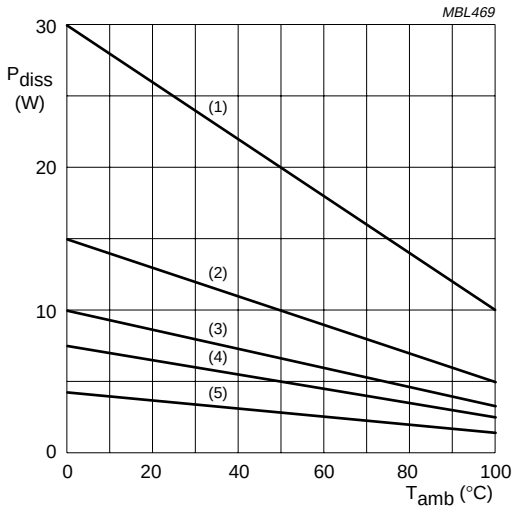

(1) $R_{th(j-a)}$ = 5 K/W.
(2) $R_{th(j-a)}$ = 10 K/W.
(3) $R_{th(j-a)}$ = 15 K/W.
(4) $R_{th(j-a)}$ = 20 K/W.
(5) $R_{th(j-a)}$ = 35 K/W.

Fig.9 Derating curves for power dissipation as a function of maximum ambient temperature.

16.6 Output current limiting

To guarantee the robustness of the class-D amplifier the maximum output current which can be delivered by the output stage is limited. An overcurrent protection is included for each output power switch. When the current flowing through any of the power switches exceeds a defined internal threshold (e.g. in case of a short-circuit to the supply lines or a short-circuit across the load), the amplifier will shut down immediately and an internal timer will be started. After a fixed time (e.g. 100 ms) the amplifier is switched on again. If the requested output current is still too high the amplifier will switch-off again. Thus the amplifier will try to switch to the operating mode every 100 ms. The average dissipation will be low in this situation because of this low duty cycle. If the overcurrent condition is removed the amplifier will remain operating.

Because the duty cycle is low the amplifier will be switched off for a relatively long period of time which will be noticed as a so-called audio-hole; an audible interruption in the output signal.

To trigger the maximum current protection in the TDA8922, the required output current must exceed 4 A. This situation occurs in case of:

- Short-circuits from any output terminal to the supply lines (V_{DD} or V_{SS})
- Short-circuit across the load or speaker impedances or a load impedance below the specified values of 4 and 8 Ω.

Even if load impedances are connected to the amplifier outputs which have an impedance rating of 4 Ω, this impedance can be lower due to the frequency characteristic of the loudspeaker; practical loudspeaker impedances can be modelled as an RLC network which will have a specific frequency characteristic: the impedance at the output of the amplifier will vary with the input frequency. A high supply voltage in combination with a low impedance will result in large current requirements.

Another factor which must be taken into account is the ripple current which will also flow through the output power switches. This ripple current depends on the inductor values which are used, supply voltage, oscillator frequency, duty factor and minimum pulse width. The maximum available output current to drive the load impedance can be calculated by subtracting the ripple current from the maximum repetitive peak current in the output pin, which is 4 A for the TDA8922.

As a rule of thumb the following expressions can be used to determine the minimum allowed load impedance without generating audio holes:

$$Z_L \geq \frac{V_P \times (1 - t_{min} \times f_{osc})}{I_{ORM} - I_{ripple}} - 0.6 \text{ for SE application.}$$

$$Z_L \geq \frac{2V_P \times (1 - t_{min} \times f_{osc})}{I_{ORM} - I_{ripple}} - 1.2 \text{ for BTL application.}$$

Where:

Z_L = load impedance

f_{osc} = oscillator frequency

t_{min} = minimum pulse width (typical 190 ns)

V_P = single-sided supply voltage
(so, if the supply is ±30 V symmetrical, then V_P = 30 V)

I_{ORM} = maximum repetitive peak current in output pin; see also Chapter 9

I_{ripple} = ripple current.

See the application notes (tbf) for a more detailed description of the implications of output current limiting.

16.7 Pumping effects

The TDA8922 class-D amplifier is supplied by a symmetrical voltage (e.g V_{DD} = +25 V and V_{SS} = –25 V). When the amplifier is used in a SE configuration, a so-called ‘pumping effect’ can occur. During one switching interval, energy is taken from one supply (e.g. V_{DD}), while a part of that energy is delivered back to the other supply line (e.g. V_{SS}) and visa versa. When the voltage supply source cannot sink energy, the voltage across the output capacitors of that voltage supply source will increase: the supply voltage is pumped to higher levels. The voltage increase caused by the pumping effect depends on:

- Speaker impedance
- Supply voltage
- Audio signal frequency
- Capacitor value present on supply lines
- Source and sink currents of other channels.

The pumping effect should not cause a malfunction of either the audio amplifier and/or the voltage supply source. For instance, this malfunction can be caused by triggering of the undervoltage or overvoltage protection or unbalance protection of the amplifier.

See the application notes (tbf) for a more detailed description of the implications of output current limiting.

16.8 Reference design

The reference design for a single-chip class-D audio amplifier using the TDA8922TH is illustrated in Fig.10. The Printed-Circuit Board (PCB) layout is shown in Fig.11. The Bill Of Materials (BOM) is given in Table 1.

16.9 PCB information for HSOP24 package

The size of the PCB is 74.3 × 59.10 mm, dual sided 35 μm copper with 121 metallized through holes.

The standard configuration has a symmetrical supply (typical ±20 V) with stereo SE outputs (typical 2 × 8 Ω). The PCB is also suitable for a mono BTL configuration (1 × 8 Ω) with symmetrical and asymmetrical supply.

It is possible to use several different output filter inductors such as 16RHBP or EP13 types to evaluate the performance against the price or size.

16.10 Classification

The application shows optimized signal and EMI performance.

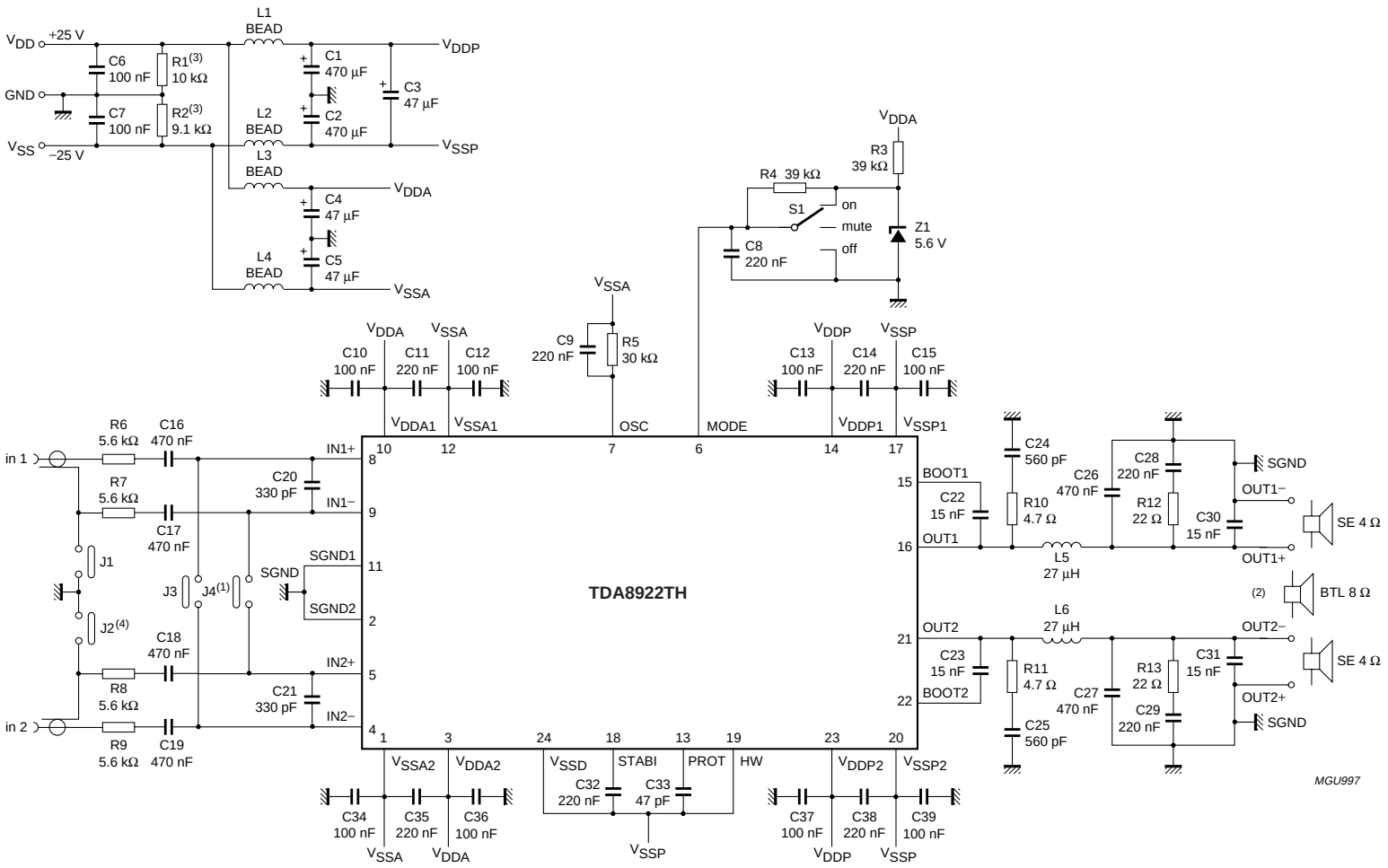

Every decoupling to ground (plane) must be made as close as possible to the pin.

To handle 20 Hz under all conditions in stereo SE mode, the external power supply needs to have a capacitance of at least 4700 µF per supply line; V_P = ±27 V (max).

(1) BTL: remove In2, R8, R9, C18, C19, C21 and close J3 and J4.

(2) BTL: connect loudspeaker between OUT1+ and OUT2−.

(3) BTL: R1 and R2 are only required when an asymmetrical supply is used (V_{SS} = 0 V).

(4) In case of hum, close J1 and J2.

Fig.10 Single-chip class-D audio amplifier application diagram (reference design for SE and BTL).

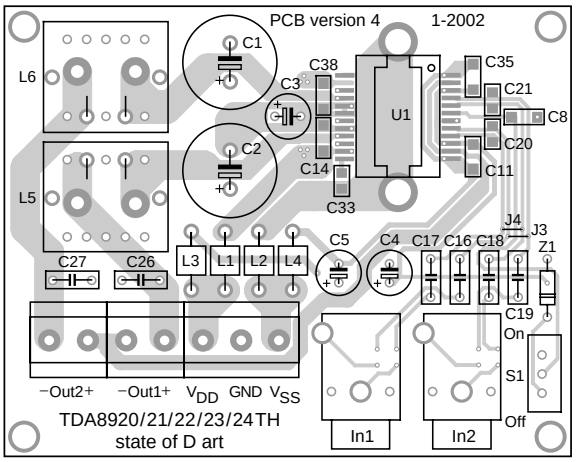

Top silk screen

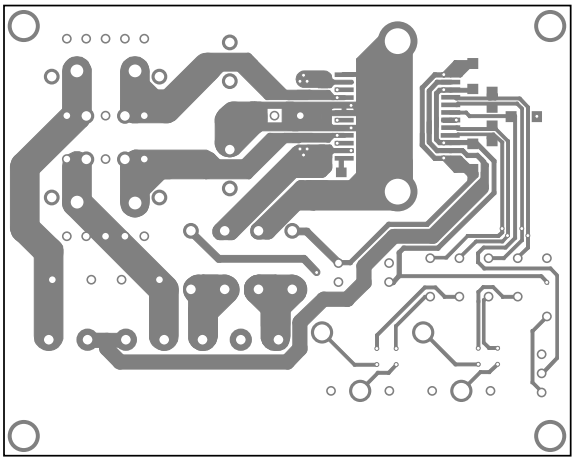

Top copper

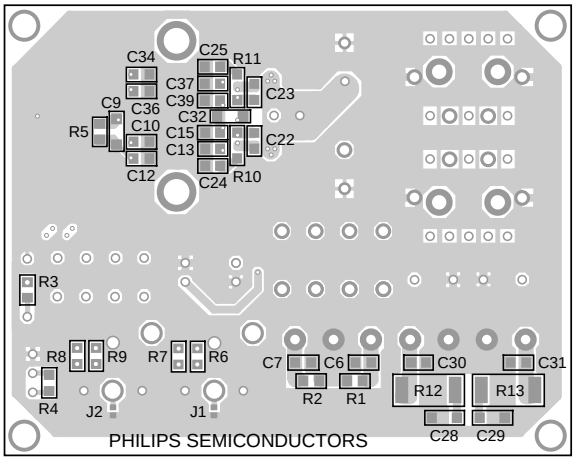

Bottom silk screen

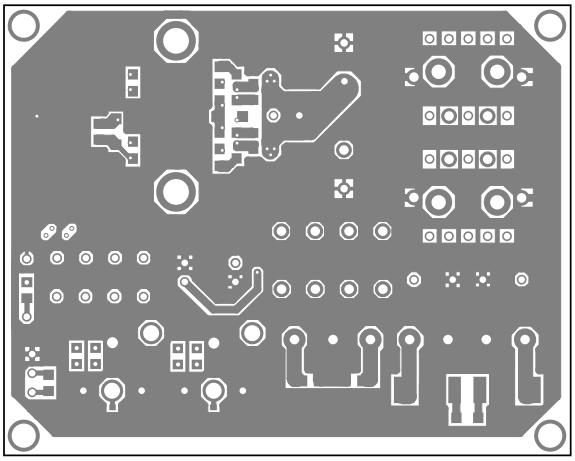

MBL496

Bottom copper

Fig.11 Printed-circuit board layout for the TDA8922TH.

16.11 Bill of materials for reference design

Table 1 Single-chip class-D audio amplifier printed-circuit board (PCB version 4; 1-2002) for TDA8922TH (see Figs 10 and 11).

BOM ITEM	QUANTITY	REFERENCE	PART	DESCRIPTION
1	1	U1	TDA8922TH	Philips Semiconductors B.V.
2	2	in1 and in2	cinch inputs	Farnell 152-396
3	2	out1 and out2	output connector	Augat 5KEV-02
4	1	V_{DD}, GND and V_{SS}	supply connector	Augat 5KEV-03
5	2	L6 and L5	27 μH	EP13 or 16RHBP
6	4	L1, L2, L3 and L4	BEAD	Murata BL01RN1-A62
7	1	S1	PCB switch	Knitter ATE1E M-O-M
8	1	Z1	5V6	BZX 79C5V6 DO-35
9	2	C1 and C2	470 μF; 35 V	Panasonic M series ECA1VM471
10	3	C3, C4 and C5	47 μF; 63 V	Panasonic NHG series ECA1JHG470
11	6	C16, C17, C18, C19, C26 and C27	470 nF; 63 V	MKT EPCOS B32529-C474-K
12	9	C8, C9, C11, C14, C28, C29, C32, C35 and C38	220 nF; 63 V	SMD 1206
13	10	C6, C7, C10, C12, C13, C15, C34, C36, C37 and C39	100 nF; 50 V	SMD 0805
14	2	C20 and C21	330 pF; 50 V	SMD 0805
15	4	C22, C23, C30 and C31	15 nF; 50 V	SMD 0805
16	2	C24, C25	560 pF; 100 V	SMD 0805
17	1	C33	47 pF; 25V	SMD 0805
18	2	R4 and R3	39 kΩ; 0.1 W	SMD 0805
19	1	R5	30 kΩ; 0.1 W	SMD 1206
20	1	R1	10 kΩ; 0.1 W; optional	SMD 0805
21	1	R2	9.1 kΩ; 0.1 W; optional	SMD 0805
22	4	R6, R7, R8 and R9	5.6 kΩ; 0.1 W	SMD 0805
23	2	R13 and R12	22 Ω; 1 W	SMD 2512
24	2	R10 and R11	4.7 Ω; 0.25 W	SMD 1206
25	2	J1 and J2	solder dot jumpers for ground reference in case of hum (60 Hz noise)	
26	2	J3 and J4	wire jumpers for BTL application	
27	1	heatsink	30 mm SK400; OK for maximum music dissipation; 1/8 Prated (2 × 75 W/8) in 2 × 4 Ω at T_{amb} = 70 °C	
28	1	printed-circuit board material	1.6 mm thick epoxy FR4 material, double sided 35 μm copper; clearances 300 μm; minimum copper track 400 μm	

16.12 Curves measured in reference design

The curves illustrated in Figs 20 and 21 are measured with a specified load impedance. Spread in Z_L (e.g. due to the frequency characteristics of the loudspeaker) can trigger the maximum current protection circuit; see Section 16.6.

The curves illustrated in Figs 30 and 31 show the effects of supply pumping when only one single-ended channel is driven with a low frequency signal; see Section 16.7.

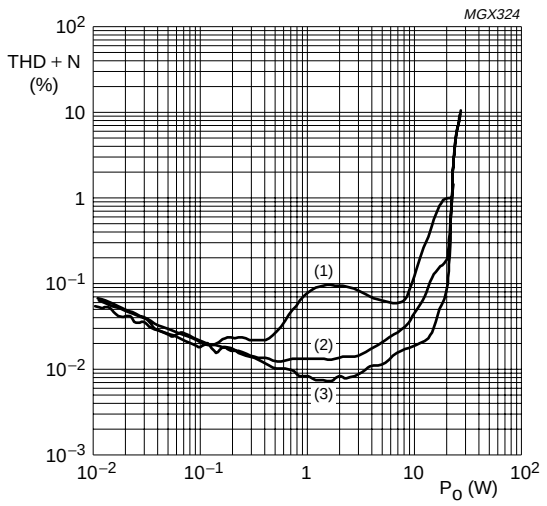

2 × 8 Ω SE; V_P = ±20 V.
(1) 10 kHz.
(2) 1 kHz.
(3) 100 Hz.

Fig.12 THD + N as a function of output power.

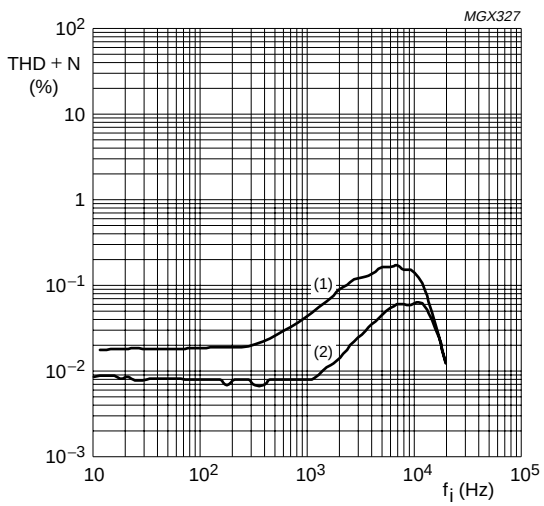

2 × 8 Ω SE; V_P = ±20 V.
(1) P_o = 10 W.
(2) P_o = 1 W.

Fig.13 THD + N as a function of input frequency.

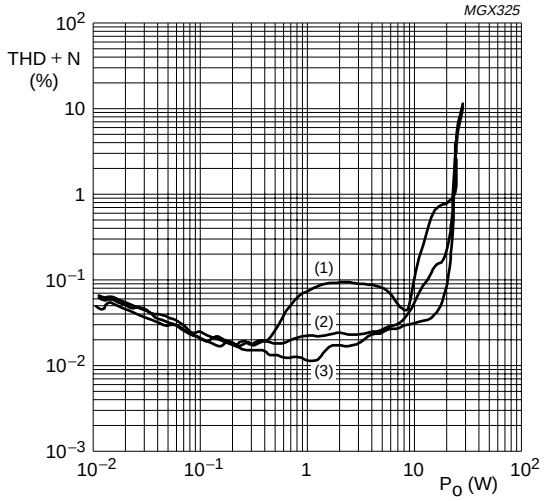

2 × 4 Ω SE; V_P = ±15 V.
(1) 10 kHz.
(2) 1 kHz.
(3) 100 Hz.

Fig.14 THD + N as a function of output power.

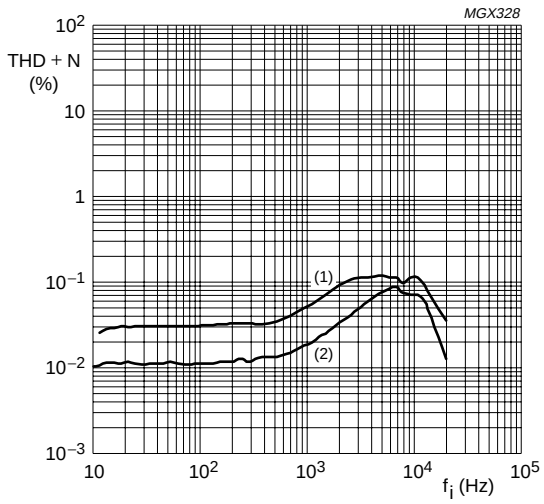

2 × 4 Ω SE; V_P = ±15 V.
(1) P_o = 10 W.
(2) P_o = 1 W.

Fig.15 THD + N as a function of input frequency.

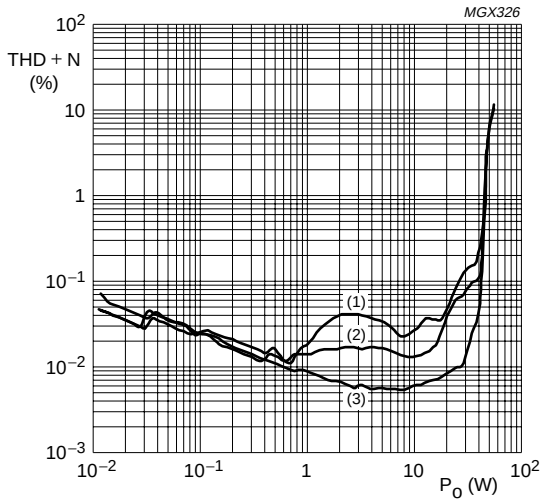

1 × 8 Ω BTL; V_P = ±15 V.
(1) 10 kHz.
(2) 1 kHz.
(3) 100 Hz.

Fig.16 THD + N as a function of output power.

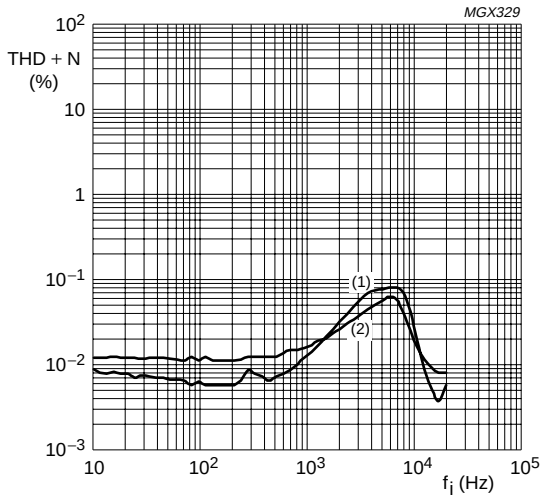

1 × 8 Ω BTL; V_P = ±15 V.
(1) P_o = 10 W.
(2) P_o = 1 W.

Fig.17 THD + N as a function of input frequency.

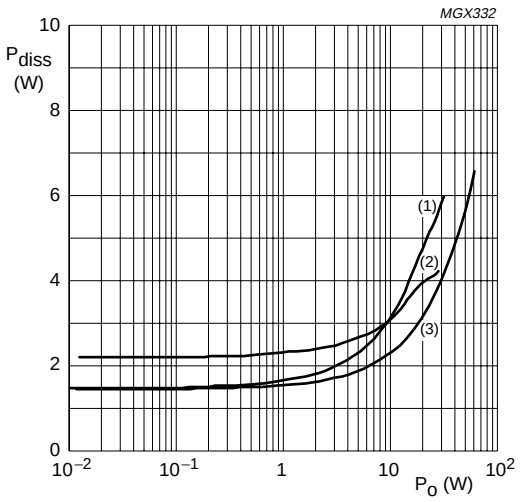

f_i = 1 kHz.
(1) 2 × 4 Ω SE, V_P = ±15 V.
(2) 2 × 8 Ω SE, V_P = ±20 V.
(3) 1 × 8 Ω BTL, V_P = ±15 V.

Fig.18 Power dissipation as a function of output power.

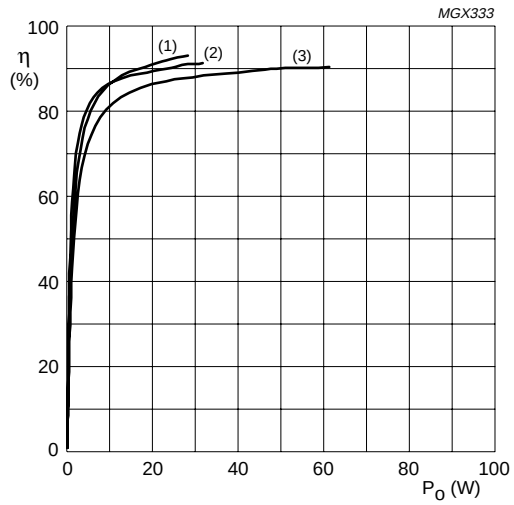

f_i = 1 kHz.
(1) 2 × 8 Ω SE, V_P = ±20 V.
(2) 2 × 4 Ω SE, V_P = ±15 V.
(3) 1 × 8 Ω BTL, V_P = ±15 V.

Fig.19 Efficiency as a function of output power.

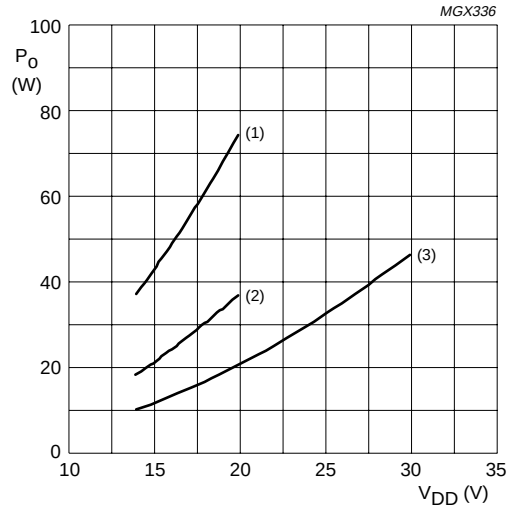

THD + N = 0.5%; f_i = 1 kHz.
(1) 1 × 8 Ω BTL.
(2) 2 × 4 Ω SE.
(3) 2 × 8 Ω SE.

Fig.20 Output power as a function of supply voltage.

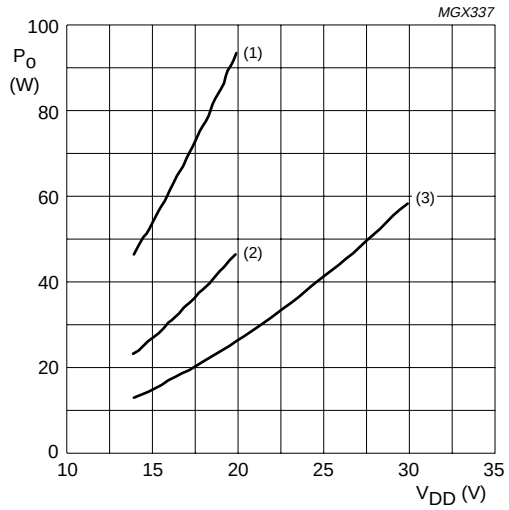

THD + N = 10%; f_i = 1 kHz.
(1) 1 × 8 Ω BTL.
(2) 2 × 4 Ω SE.
(3) 2 × 8 Ω SE.

Fig.21 Output power as a function of supply voltage.

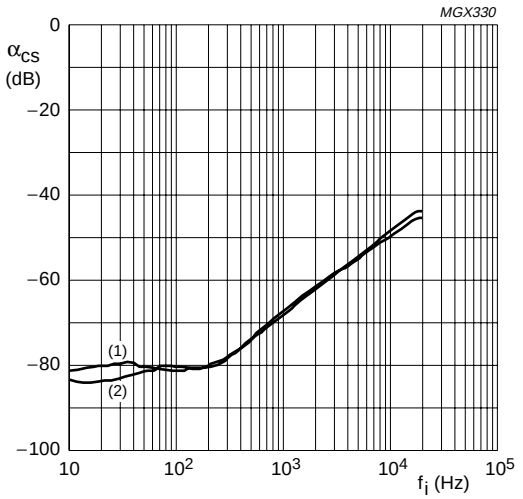

2 × 8 Ω SE; V_P = ±20 V.
(1) P_o = 1 W.
(2) P_o = 10 W.

Fig.22 Channel separation as a function of input frequency.

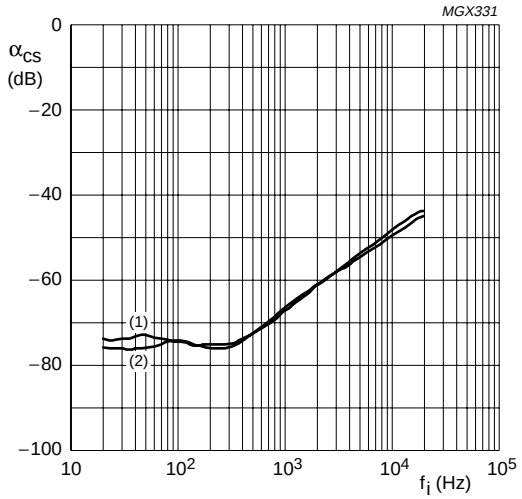

2 × 4 Ω SE; V_P = ±15 V.
(1) P_o = 1 W.
(2) P_o = 10 W.

Fig.23 Channel separation as a function of input frequency.

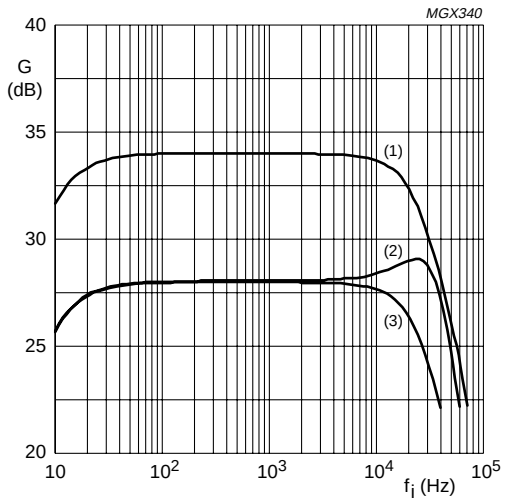

V_i = 100 mV; R_s = 5.6 kΩ; C_i = 330 pF.
(1) 1 × 8 Ω BTL, V_P = ±15 V.
(2) 2 × 8 Ω SE, V_P = ±20 V.
(3) 2 × 4 Ω SE, V_P = ±15 V.

Fig.24 Gain as a function of input frequency.

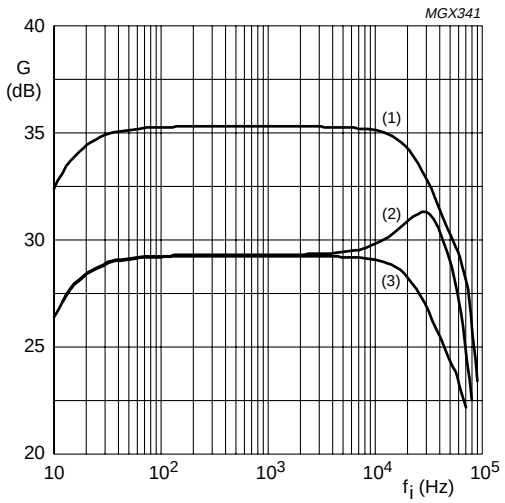

V_i = 100 mV; R_s = 0 kΩ.
(1) 1 × 8 Ω BTL, V_P = ±15 V.
(2) 2 × 8 Ω SE, V_P = ±20 V.
(3) 2 × 4 Ω SE, V_P = ±15 V.

Fig.25 Gain as a function of input frequency.

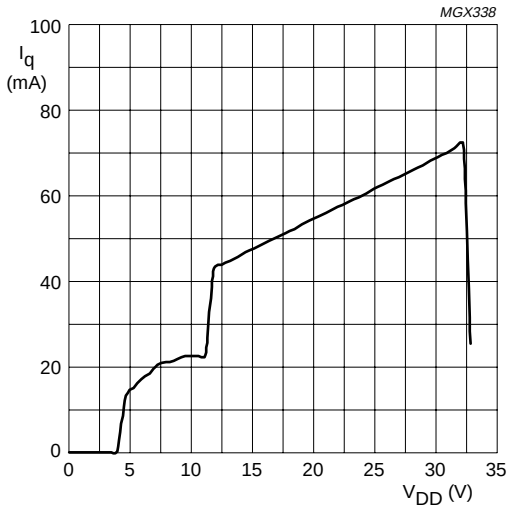

$R_L = \infty$.

Fig.26 Quiescent current as a function of supply voltage.

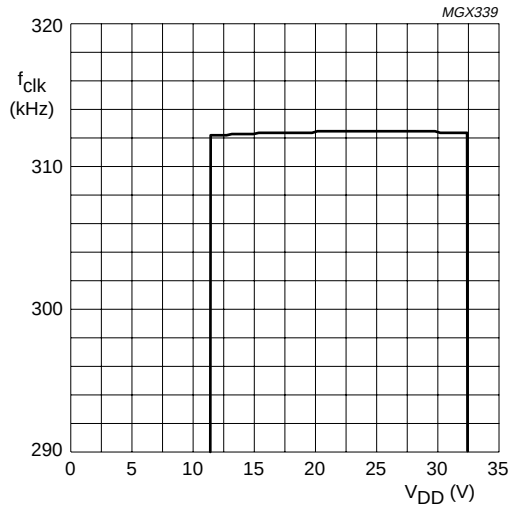

$R_L = \infty$.

Fig.27 Clock frequency as a function of supply voltage.

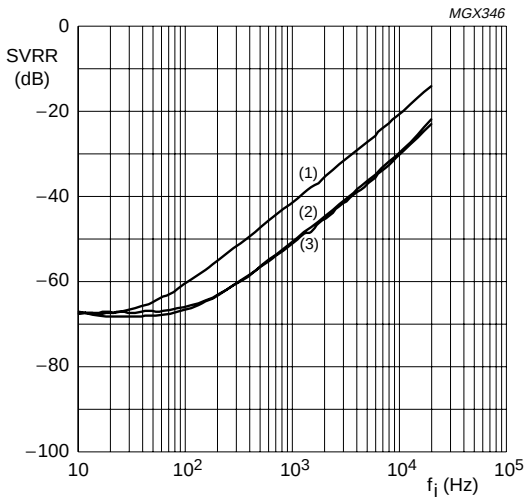

$V_P = \pm 20$ V; $V_{ripple} = 2$ V (p-p) with respect to ground.

(1) Both supply lines in phase.

(2) Both supply lines in anti-phase.

(3) One supply line rippled.

Fig.28 SVRR as a function of input frequency.

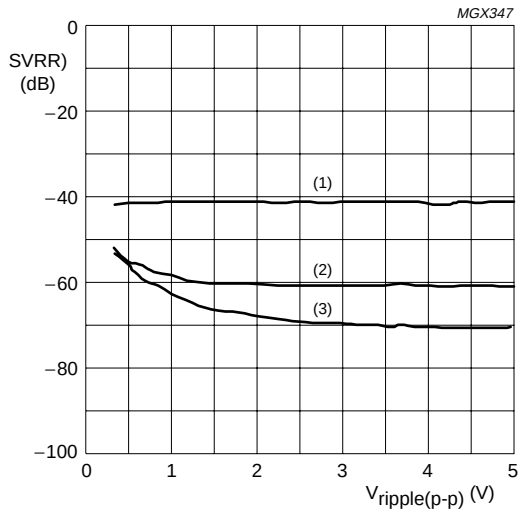

$V_P = \pm 20$ V; V_{ripple} with respect to ground (in phase).

(1) $f_{ripple} = 1$ kHz.

(2) $f_{ripple} = 100$ Hz.

(3) $f_{ripple} = 10$ Hz.

Fig.29 SVRR as a function of $V_{ripple(p-p)}$.

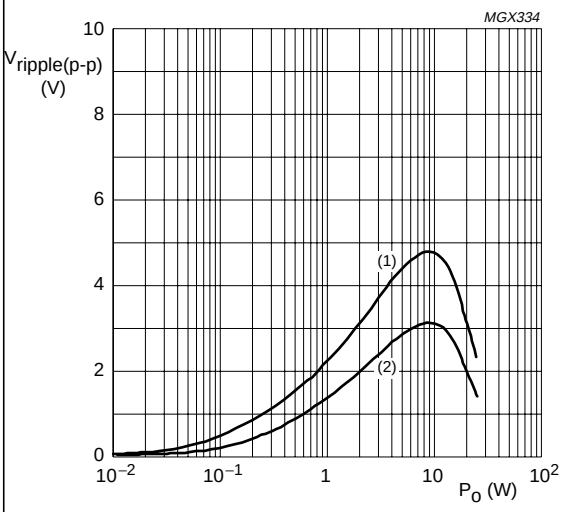

3000 μF per supply line; f_i = 10 Hz.
(1) 1 × 4 Ω SE, V_P = ±15 V.
(2) 1 × 8 Ω SE, V_P = ±20 V.

Fig.30 Supply voltage ripple as a function of output power.

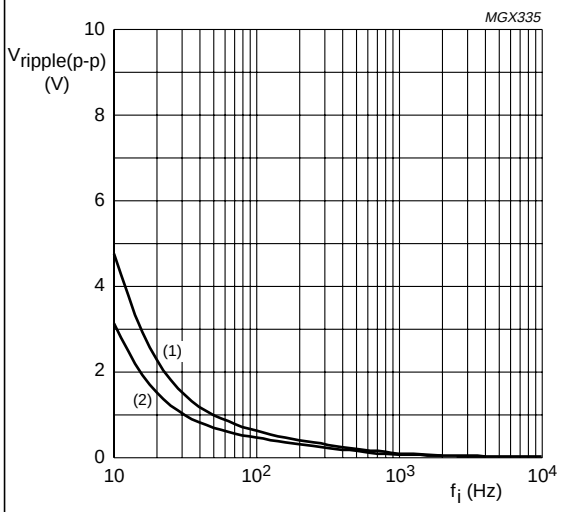

3000 μF per supply line.
(1) P_o = 10 W into 1 × 4 Ω SE, V_P = ±15 V.
(2) P_o = 10 W into 1 × 8 Ω SE, V_P = ±20 V.

Fig.31 Supply voltage ripple as a function of input frequency.

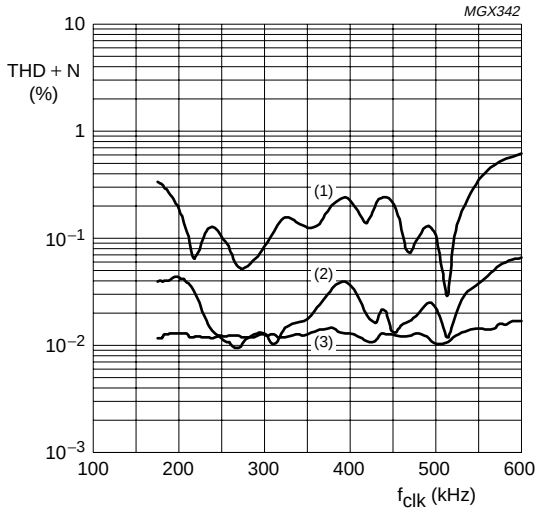

V_P = ±20 V; P_o = 1 W into 8 Ω.
(1) 10 kHz.
(2) 1 kHz.
(3) 100 Hz.

Fig.32 THD + N as a function of clock frequency.

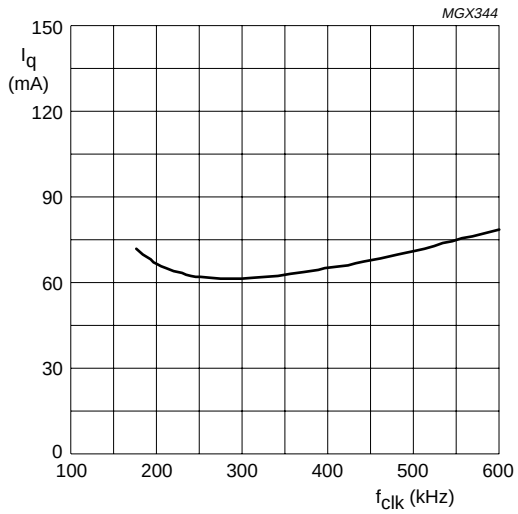

V_P = ±20 V; R_L = ∞.

Fig.33 Quiescent current as a function of clock frequency.

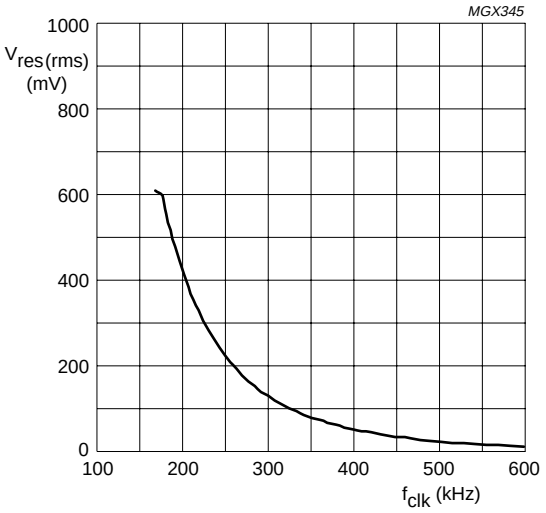

V_P = ±20 V; R_L = 8 Ω.

Fig.34 PWM residual voltage as a function of clock frequency.

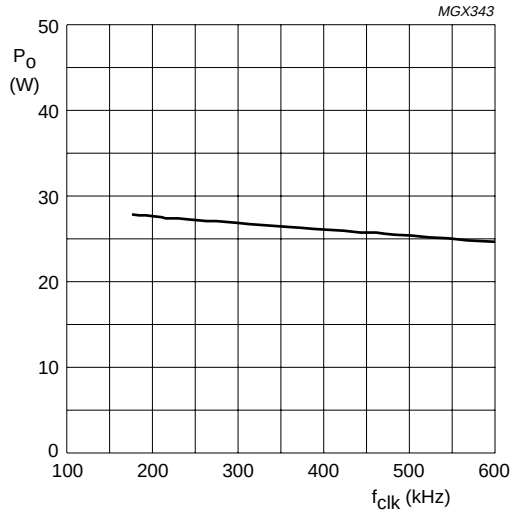

V_P = ±20 V; R_L = 8 Ω; f_i = 1 kHz; THD + N = 10%.

Fig.35 Output power as a function of clock frequency.

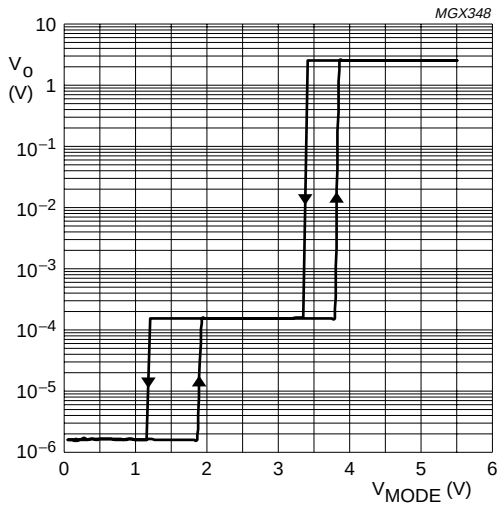

V_i = 100 mV; f_i = 1 kHz.

Fig.36 Output voltage as a function of mode selection voltage.

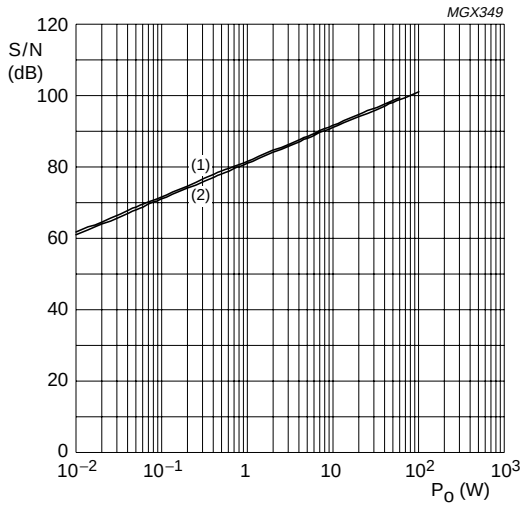

V_P = ±20 V; R_s = 5.6 kΩ.; filter: 20 kHz AES17

(1) 2 × 8 Ω SE.

(2) 1 × 8 Ω BTL.

Fig.36 Signal-to-noise ratio as a function of output power.

16.13 Application schematics

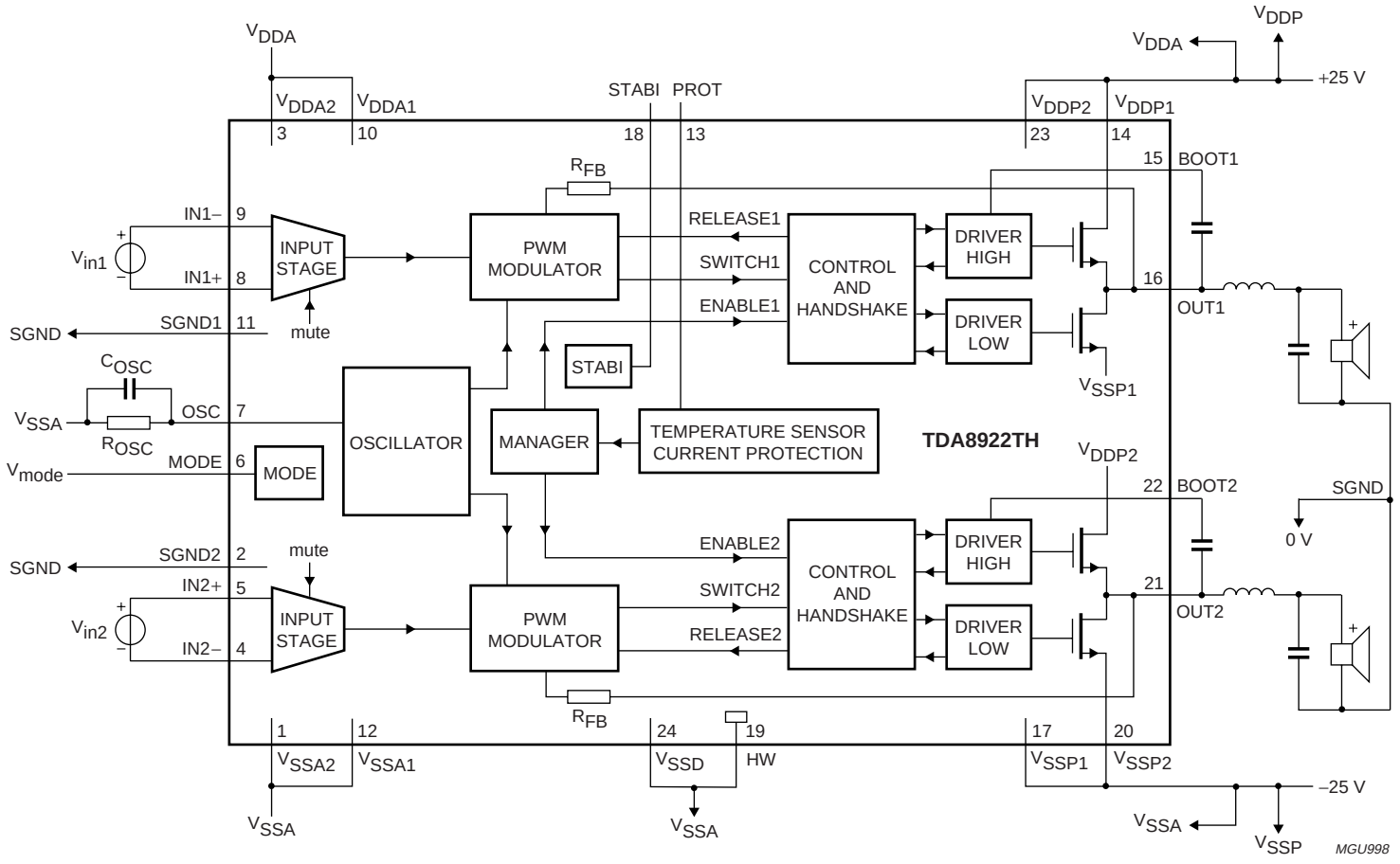

Fig.37 Typical SE application schematic of TDA8922TH.

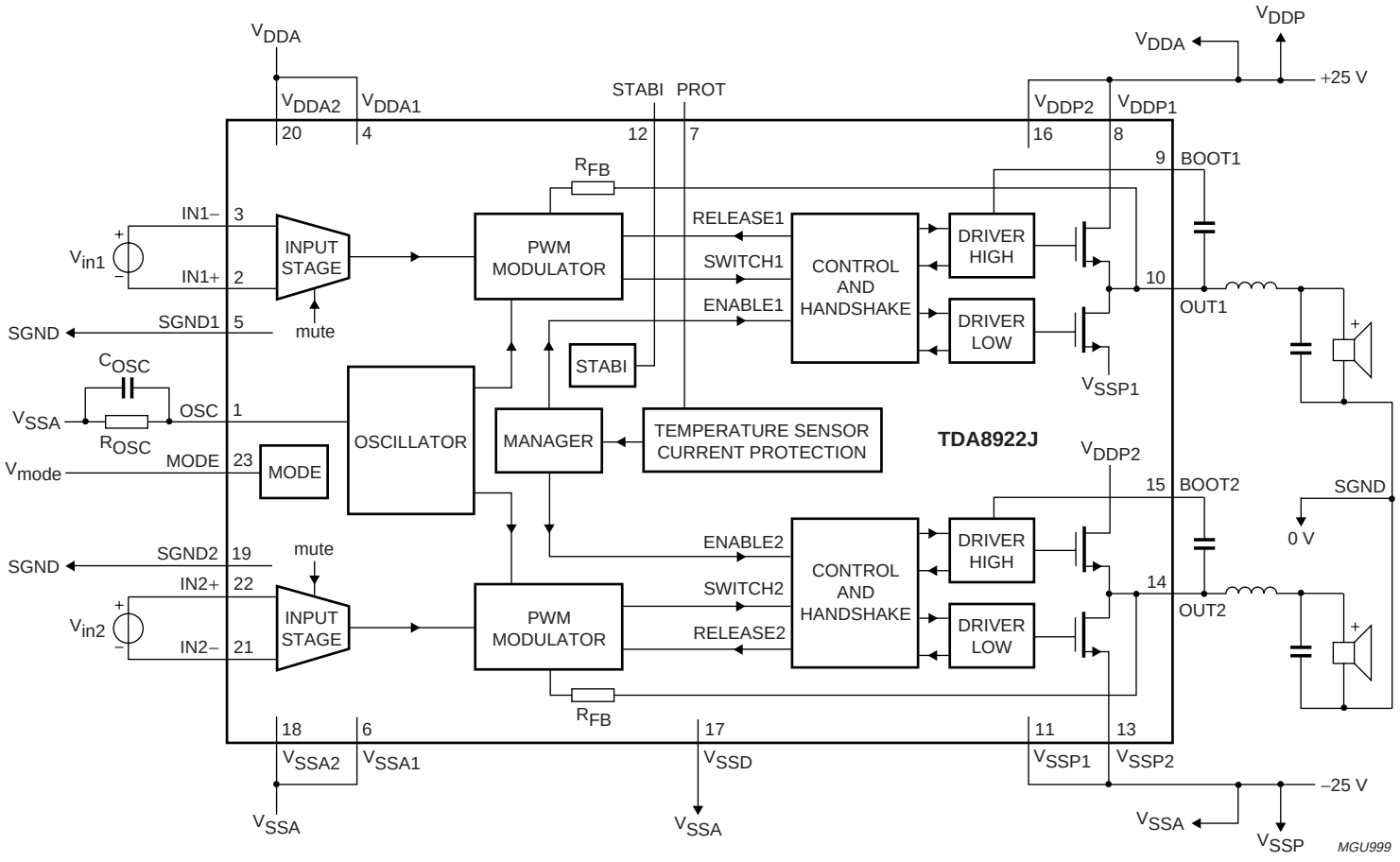

Fig.38 Typical SE application schematic of TDA8922J.

17 PACKAGE OUTLINES

HSOP24: plastic, heatsink small outline package; 24 leads; low stand-off height **SOT566-3**

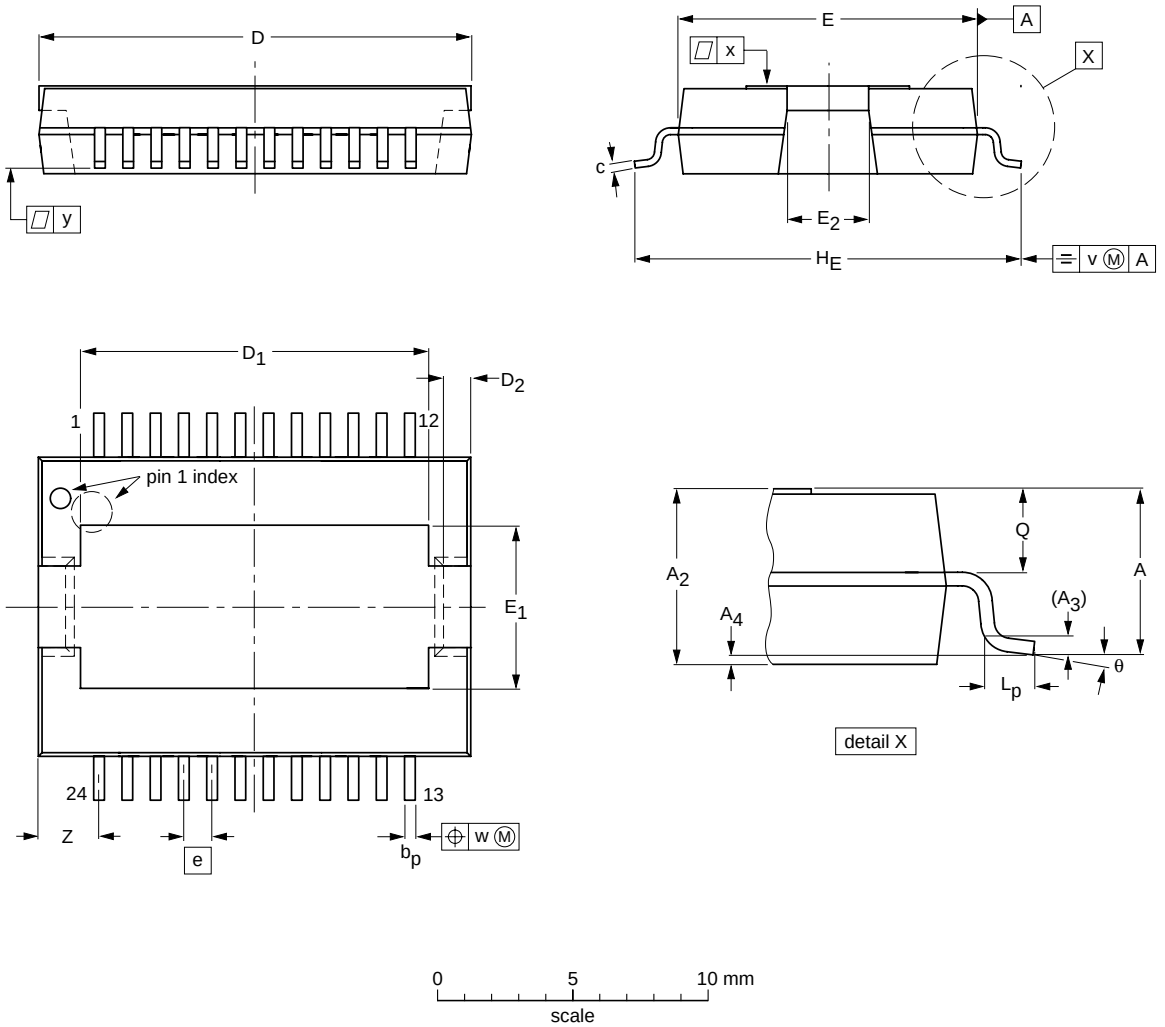

DIMENSIONS (mm are the original dimensions)

UNIT	A max.	A_2	A_3	A_4(1)	b_p	c	D(2)	D_1	D_2	E(2)	E_1	E_2	e	H_E	L_p	Q	v	w	x	y	Z	θ
mm	3.5	3.5 3.2	0.35	+0.08 −0.04	0.53 0.40	0.32 0.23	16.0 15.8	13.0 12.6	1.1 0.9	11.1 10.9	6.2 5.8	2.9 2.5	1	14.5 13.9	1.1 0.8	1.7 1.5	0.25	0.25	0.03	0.07	2.7 2.2	8° 0°

Notes

1. Limits per individual lead.
2. Plastic or metal protrusions of 0.25 mm maximum per side are not included.

OUTLINE VERSION	REFERENCES				EUROPEAN PROJECTION	ISSUE DATE
	IEC	JEDEC	JEITA			
SOT566-3						~~02-01-30~~ 03-02-18

DBS23P: plastic DIL-bent-SIL power package; 23 leads (straight lead length 3.2 mm) **SOT411-1**

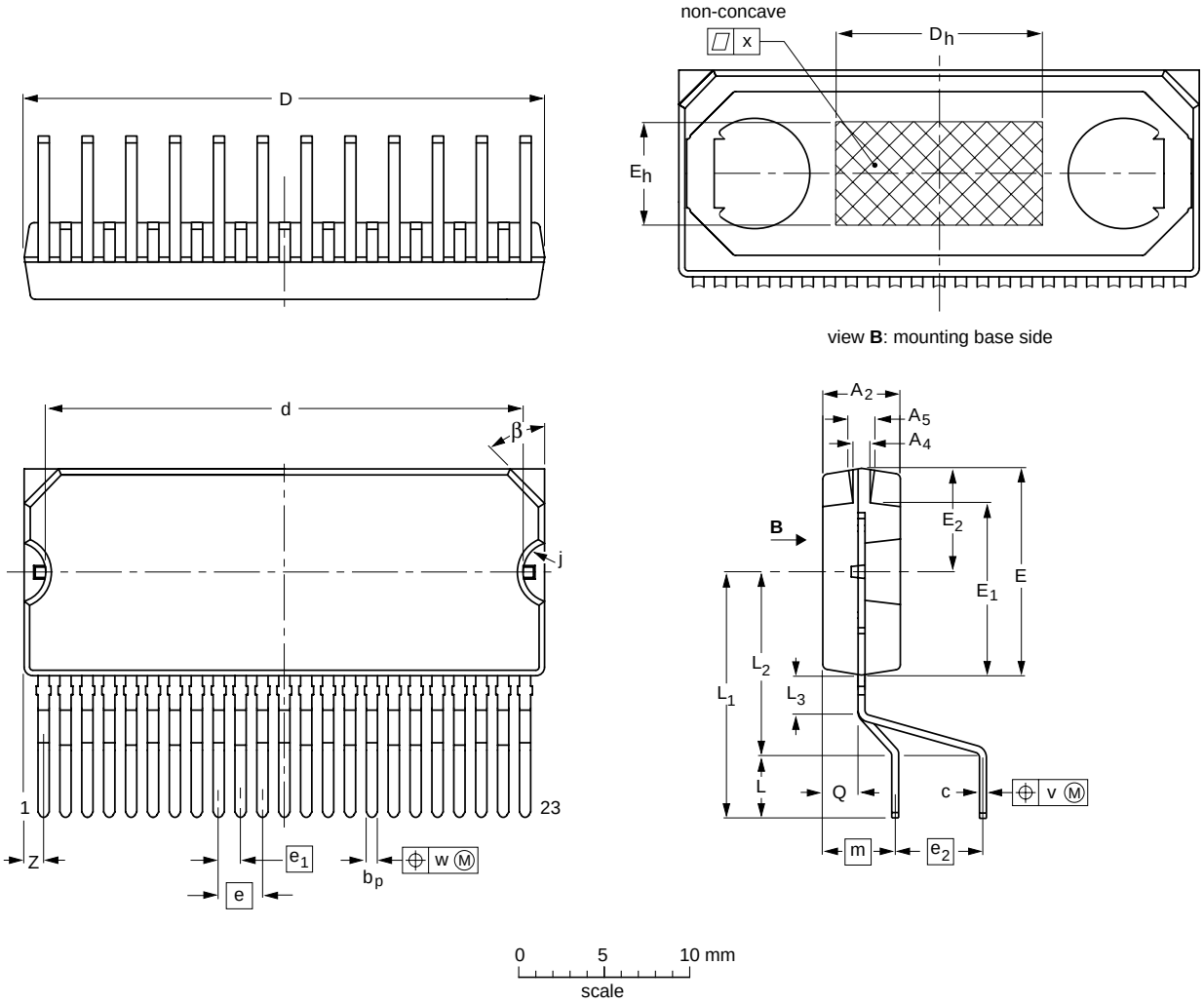

DIMENSIONS (mm are the original dimensions)

UNIT	A_2	A_4	A_5	b_p	c	D(1)	d	D_h	E(1)	e	e_1	e_2	E_h	E_1	E_2	j	L	L_1	L_2	L_3	m	Q	v	w	x	β	Z(1)
mm	4.6 4.3	1.15 0.85	1.65 1.35	0.75 0.60	0.55 0.35	30.4 29.9	28.0 27.5	12	12.2 11.8	2.54	1.27	5.08	6	10.15 9.85	6.2 5.8	1.85 1.65	3.6 2.8	14 13	10.7 9.9	2.4 1.6	4.3	2.1 1.8	0.6	0.25	0.03	45°	1.43 0.78

Note

1. Plastic or metal protrusions of 0.25 mm maximum per side are not included.

OUTLINE VERSION	REFERENCES				EUROPEAN PROJECTION	ISSUE DATE
	IEC	JEDEC	JEITA			
SOT411-1						~~98-02-20~~ 02-04-24

18 SOLDERING

18.1 Introduction

This text gives a very brief insight to a complex technology. A more in-depth account of soldering ICs can be found in our *"Data Handbook IC26; Integrated Circuit Packages"* (document order number 9398 652 90011).

There is no soldering method that is ideal for all IC packages. Wave soldering is often preferred when through-hole and surface mount components are mixed on one printed-circuit board. Wave soldering can still be used for certain surface mount ICs, but it is not suitable for fine pitch SMDs. In these situations reflow soldering is recommended.

18.2 Through-hole mount packages

18.2.1 Soldering by dipping or by solder wave

The maximum permissible temperature of the solder is 260 °C; solder at this temperature must not be in contact with the joints for more than 5 seconds. The total contact time of successive solder waves must not exceed 5 seconds.

The device may be mounted up to the seating plane, but the temperature of the plastic body must not exceed the specified maximum storage temperature ($T_{stg(max)}$). If the printed-circuit board has been pre-heated, forced cooling may be necessary immediately after soldering to keep the temperature within the permissible limit.

18.2.2 Manual soldering

Apply the soldering iron (24 V or less) to the lead(s) of the package, either below the seating plane or not more than 2 mm above it. If the temperature of the soldering iron bit is less than 300 °C it may remain in contact for up to 10 seconds. If the bit temperature is between 300 and 400 °C, contact may be up to 5 seconds.

18.3 Surface mount packages

18.3.1 Reflow soldering

Typical reflow peak temperatures range from 215 to 250 °C. The top-surface temperature of the packages should preferably be kept:

- below 220 °C for all the BGA packages and packages with a thickness 2.5mm and packages with a thickness <2.5 mm and a volume ≥350 mm^3 so called thick/large packages
- below 235 °C for packages with a thickness <2.5 mm and a volume <350 mm^3 so called small/thin packages.

18.3.2 Wave soldering

Conventional single wave soldering is not recommended for surface mount devices (SMDs) or printed-circuit boards with a high component density, as solder bridging and non-wetting can present major problems.

To overcome these problems the double-wave soldering method was specifically developed.

If wave soldering is used the following conditions must be observed for optimal results:

- Use a double-wave soldering method comprising a turbulent wave with high upward pressure followed by a smooth laminar wave.
- For packages with leads on two sides and a pitch (e):
  - larger than or equal to 1.27 mm, the footprint longitudinal axis is **preferred** to be parallel to the transport direction of the printed-circuit board;
  - smaller than 1.27 mm, the footprint longitudinal axis **must** be parallel to the transport direction of the printed-circuit board.

  The footprint must incorporate solder thieves at the downstream end.
- For packages with leads on four sides, the footprint must be placed at a 45° angle to the transport direction of the printed-circuit board. The footprint must incorporate solder thieves downstream and at the side corners.

During placement and before soldering, the package must be fixed with a droplet of adhesive. The adhesive can be applied by screen printing, pin transfer or syringe dispensing. The package can be soldered after the adhesive is cured.

Typical dwell time is 4 seconds at 250 °C.
A mildly-activated flux will eliminate the need for removal of corrosive residues in most applications.

18.3.3 Manual soldering

Fix the component by first soldering two diagonally-opposite end leads. Use a low voltage (24 V or less) soldering iron applied to the flat part of the lead. Contact time must be limited to 10 seconds at up to 300 °C. When using a dedicated tool, all other leads can be soldered in one operation within 2 to 5 seconds between 270 and 320 °C.

18.4 Suitability of IC packages for wave, reflow and dipping soldering methods

MOUNTING	PACKAGE[1]	SOLDERING METHOD		
		WAVE	REFLOW[2]	DIPPING
Through-hole mount	DBS, DIP, HDIP, SDIP, SIL	suitable[3]	–	suitable
Surface mount	BGA, LBGA, LFBGA, SQFP, TFBGA, VFBGA	not suitable	suitable	–
	DHVQFN, HBCC, HBGA, HLQFP, HSQFP, HSOP, HTQFP, HTSSOP, HVQFN, HVSON, SMS	not suitable[4]	suitable	–
	PLCC[5], SO, SOJ	suitable	suitable	–
	LQFP, QFP, TQFP	not recommended[5][6]	suitable	–
	SSOP, TSSOP, VSO, VSSOP	not recommended[7]	suitable	–

Notes

1. For more detailed information on the BGA packages refer to the *"(LF)BGA Application Note*" (AN01026); order a copy from your Philips Semiconductors sales office.
2. All surface mount (SMD) packages are moisture sensitive. Depending upon the moisture content, the maximum temperature (with respect to time) and body size of the package, there is a risk that internal or external package cracks may occur due to vaporization of the moisture in them (the so called popcorn effect). For details, refer to the Drypack information in the *"Data Handbook IC26; Integrated Circuit Packages; Section: Packing Methods"*.
3. For SDIP packages, the longitudinal axis must be parallel to the transport direction of the printed-circuit board.
4. These packages are not suitable for wave soldering. On versions with the heatsink on the bottom side, the solder cannot penetrate between the printed-circuit board and the heatsink. On versions with the heatsink on the top side, the solder might be deposited on the heatsink surface.
5. If wave soldering is considered, then the package must be placed at a 45° angle to the solder wave direction. The package footprint must incorporate solder thieves downstream and at the side corners.
6. Wave soldering is suitable for LQFP, QFP and TQFP packages with a pitch (e) larger than 0.8 mm; it is definitely not suitable for packages with a pitch (e) equal to or smaller than 0.65 mm.
7. Wave soldering is suitable for SSOP, TSSOP, VSO and VSSOP packages with a pitch (e) equal to or larger than 0.65 mm; it is definitely not suitable for packages with a pitch (e) equal to or smaller than 0.5 mm.

19 DATA SHEET STATUS

LEVEL	DATA SHEET STATUS(1)	PRODUCT STATUS(2)(3)	DEFINITION
I	Objective data	Development	This data sheet contains data from the objective specification for product development. Philips Semiconductors reserves the right to change the specification in any manner without notice.
II	Preliminary data	Qualification	This data sheet contains data from the preliminary specification. Supplementary data will be published at a later date. Philips Semiconductors reserves the right to change the specification without notice, in order to improve the design and supply the best possible product.
III	Product data	Production	This data sheet contains data from the product specification. Philips Semiconductors reserves the right to make changes at any time in order to improve the design, manufacturing and supply. Relevant changes will be communicated via a Customer Product/Process Change Notification (CPCN).

Notes

1. Please consult the most recently issued data sheet before initiating or completing a design.
2. The product status of the device(s) described in this data sheet may have changed since this data sheet was published. The latest information is available on the Internet at URL http://www.semiconductors.philips.com.
3. For data sheets describing multiple type numbers, the highest-level product status determines the data sheet status.

20 DEFINITIONS

Short-form specification — The data in a short-form specification is extracted from a full data sheet with the same type number and title. For detailed information see the relevant data sheet or data handbook.

Limiting values definition — Limiting values given are in accordance with the Absolute Maximum Rating System (IEC 60134). Stress above one or more of the limiting values may cause permanent damage to the device. These are stress ratings only and operation of the device at these or at any other conditions above those given in the Characteristics sections of the specification is not implied. Exposure to limiting values for extended periods may affect device reliability.

Application information — Applications that are described herein for any of these products are for illustrative purposes only. Philips Semiconductors make no representation or warranty that such applications will be suitable for the specified use without further testing or modification.

21 DISCLAIMERS

Life support applications — These products are not designed for use in life support appliances, devices, or systems where malfunction of these products can reasonably be expected to result in personal injury. Philips Semiconductors customers using or selling these products for use in such applications do so at their own risk and agree to fully indemnify Philips Semiconductors for any damages resulting from such application.

Right to make changes — Philips Semiconductors reserves the right to make changes in the products - including circuits, standard cells, and/or software - described or contained herein in order to improve design and/or performance. When the product is in full production (status ‘Production’), relevant changes will be communicated via a Customer Product/Process Change Notification (CPCN). Philips Semiconductors assumes no responsibility or liability for the use of any of these products, conveys no licence or title under any patent, copyright, or mask work right to these products, and makes no representations or warranties that these products are free from patent, copyright, or mask work right infringement, unless otherwise specified.

Philips Semiconductors – a worldwide company

Contact information

For additional information please visit **http://www.semiconductors.philips.com**. Fax: **+31 40 27 24825**
For sales offices addresses send e-mail to: **sales.addresses@www.semiconductors.philips.com**.

© Koninklijke Philips Electronics N.V. 2003 SCA75

All rights are reserved. Reproduction in whole or in part is prohibited without the prior written consent of the copyright owner.

The information presented in this document does not form part of any quotation or contract, is believed to be accurate and reliable and may be changed without notice. No liability will be accepted by the publisher for any consequence of its use. Publication thereof does not convey nor imply any license under patent- or other industrial or intellectual property rights.

Printed in The Netherlands 753503/01/pp36 Date of release: 2003 Mar 20 Document order number: 9397 750 10757

Let's make things better.

Philips Semiconductors

PHILIPS