CX-VX55/VX77

SERVICE MANUAL

Ver. 1.3 2005. 10

AEP Model
UK Model
E Model
Australian Model

Photo: CX-VX55

- CX-VX55/VX77 are DVD receiver in AVJ-X55/X77.

Model Name Using Similar Mechanism	CX-VX33

Manufactured under license from Dolby Laboratories. “Dolby”, “Pro Logic”, and the double-D symbol are trademarks of Dolby Laboratories. Confidential Unpublished works. Copyright 1992–1997 Dolby Laboratories. All rights reserved.

Manufactured under license from Digital Theater Systems, Inc. US Pat. No. 5,451,942 5,956,674, 5,974,380, 5,978,762 and other worldwide patents issued and pending. “dts” and “DTS Digital Surround” are registered trademarks of Digital Theatre Systems, Inc. Copyright 1996, 2000 Digital Theater Systems, Inc. All rights reserved.

SPECIFICATIONS

General

Power supply	220 – 240 V AC, 50/60 Hz
Power consumption	100 W, No more than 1 W (220 – 240 V AC) (at the power saving mode)
Mass	4.9 kg
External dimensions (W × H × D)	430 × 70 × 370.5 mm
Operating conditions	
Temperature:	5 – 35°C
Operation status:	Horizontal
Operating humidity	5 – 85%

CD/DVD

Laser	Semiconductor laser, wavelength 650 nm for VCD and DVD, wavelength 780 nm for CD
Emission duration	Continuous
Signal system	CX-VX55: PAL 625/50, NTSC 525/60 (AEP, UK, CET, E3) NTSC 525/60 (E41) PAL, NTSC (AUS, SP, RU) CX-VX77: PAL, NTSC
Frequency response (audio)	2 Hz – 20 kHz (±1.0 dB)
Signal-to-noise ratio (audio)	More than 75 dB (1 kHz, NOP, 20 kHz LPF/A-Filter)
Dynamic range (audio)	More than 70 dB
Harmonic distortion (audio)	0.5% (1 kHz, at 12 W position) (20 kHz LPF/A-Filter)

Video

Inputs	
VIDEO (AUDIO IN):	Sensitivity: 800 mV Impedance: 50 kilohms
MIC (phone jacks):	Sensitivity: 4 mV Impedance: 10 kilohms
SCART (AUDIO IN):	AEP, UK, CET, RU model: Sensitivity: 800 mV Impedance: 50 kilohms
Video output	1.0 V (p-p), 75 Ω, negative sync., RCA jack AEP, UK, CET, RU model: EURO AV (TO TV)
S VIDEO OUT	E3, E41, AUS, SP model: (Y) 1.0 V (p-p), 75 ohms, negative sync., Mini DIN 4-pin × 1 (C) 0.286 V (p-p), 75 ohms
COMPONENT VIDEO OUT	E3, E41, AUS, SP model: (Y) 1.0 V (p-p), 75 ohms, negative sync., RCA jack × 1 (PB/CB)/(PR/CR) 0.7 V (p-p), 75 ohms, RCA jack × 2

– Continued on next page –

DVD RECEIVER

9-879-239-04
2005J04-1
© 2005. 10

Sony Corporation
Personal Audio Division
Published by Sony Engineering Corporation

Tuner

FM	
Tuning range	87.5 – 108 MHz
Intermediate frequency	10.7 MHz
Signal-to noise ratio	60 dB (Mono)
AM (MW)	
Tuning range	522 – 1,611 kHz
Intermediate frequency	450 kHz

Amplifier

Stereo mode	80 W + 80 W (6 Ω at 1 kHz, THD 10%)
Surround mode (*Depending on the sound mode settings and the source, there may be no sound output.)	Front: 80 W + 80 W Centre*: 80 W Surround*: 80 W + 80 W (6 Ω at 1 kHz, THD 10%) Subwoofer*: 150 W (3 Ω at 50 Hz, THD 10%)
Outputs	PHONES: (32 Ω, 25 mW)

Design and specifications are subject to change without notice.

• Abbreviation
CET : East European & Russian model
E3 : 240V AC area in E model
E41 : 230V AC area in E model
AUS : Australian model
SP : Singapore model
RU : Russian model

Notes on Chip Component Replacement

- Never reuse a disconnected chip component.
- Notice that the minus side of a tantalum capacitor may be damaged by heat.

Flexible Circuit Board Repairing

- Keep the temperature of soldering iron around 270°C during repairing.
- Do not touch the soldering iron on the same conductor of the circuit board (within 3 times).
- Be careful not to apply force on the conductor when soldering or unsoldering.

UNLEADED SOLDER

Boards requiring use of unleaded solder are printed with the lead free mark (LF) indicating the solder contains no lead.
(Caution: Some printed circuit boards may not come printed with the lead free mark due to their particular size)

: LEAD FREE MARK

Unleaded solder has the following characteristics.

- Unleaded solder melts at a temperature about 40 °C higher than ordinary solder.
  Ordinary soldering irons can be used but the iron tip has to be applied to the solder joint for a slightly longer time.
  Soldering irons using a temperature regulator should be set to about 350 °C.
  Caution: The printed pattern (copper foil) may peel away if the heated tip is applied for too long, so be careful!
- Strong viscosity
  Unleaded solder is more viscou-s (sticky, less prone to flow) than ordinary solder so use caution not to let solder bridges occur such as on IC pins, etc.
- Usable with ordinary solder
  It is best to use only unleaded solder but unleaded solder may also be added to ordinary solder.

SAFETY-RELATED COMPONENT WARNING!!

COMPONENTS IDENTIFIED BY MARK ⚠ OR DOTTED LINE WITH MARK ⚠ ON THE SCHEMATIC DIAGRAMS AND IN THE PARTS LIST ARE CRITICAL TO SAFE OPERATION. REPLACE THESE COMPONENTS WITH SONY PARTS WHOSE PART NUMBERS APPEAR AS SHOWN IN THIS MANUAL OR IN SUPPLEMENTS PUBLISHED BY SONY.

CAUTION

Use of controls or adjustments or performance of procedures other than those specified herein may result in hazardous radiation exposure.

NOTES ON HANDLING THE OPTICAL PICK-UP BLOCK OR BASE UNIT

The laser diode in the optical pick-up block may suffer electrostatic breakdown because of the potential difference generated by the charged electrostatic load, etc. on clothing and the human body.
During repair, pay attention to electrostatic break-down and also use the procedure in the printed matter which is included in the repair parts.
The flexible board is easily damaged and should be handled with care.

NOTES ON LASER DIODE EMISSION CHECK

The laser beam on this model is concentrated so as to be focused on the disc reflective surface by the objective lens in the optical pick-up block. Therefore, when checking the laser diode emission, observe from more than 30 cm away from the objective lens.

Laser component in this product is capable of emitting radiation exceeding the limit for Class 1.

This appliance is classified as a CLASS 1 LASER product. The label is located on the left side of the unit as viewed from the front.

TABLE OF CONTENTS

1. GENERAL
Front Panel Controls 4
Display Window Indicators 5
Remote Control 6
Rear Panel Connections (AEP, UK, CET, RU Model) 7
Rear Panel Connections (E3, E41, AUS, SP Model) 8

2. DISASSEMBLY
2-1. Top Cover 9
2-2. Front Panel Assy 10
2-3. DVD Mechanism Deck 10
2-4. Rear Panel Section 11
2-5. SMPS Board 11
2-6. DVD Board 12
2-7. Main Board 12
2-8. Base Unit 13

3. ELECTRICAL TROUBLESHOOTING GUIDE
3-1. Audio Part 14
3-2. DVD Part 18
3-3. Details and Waveforms on System Test and Debugging ... 25

4. TEST MODE 38

5. ELECTRICAL ADJUSTMENT 39

6. DIAGRAMS
6-1. Block Diagram –DVD Section– 41
6-2. Block Diagram –Audio Section– 42
6-3. Block Diagram –Tuner/Power Section– 43
6-4. Printed Wiring Boards –DVD Section (1/2)– 45
6-5. Printed Wiring Board –DVD Section (2/2)– 46
6-6. Schematic Diagram –DVD Section (1/3)– 47
6-7. Schematic Diagram –DVD Section (2/3)– 48
6-8. Schematic Diagram –DVD Section (3/3)– 49
6-9. Printed Wiring Board –Main Section (1/2)– 50
6-10. Printed Wiring Board –Main Section (2/2)– 51
6-11. Schematic Diagram –Main Section (1/5)– 52
6-12. Schematic Diagram –Main Section (2/5)– 53
6-13. Schematic Diagram –Main Section (3/5)– 54
6-14. Schematic Diagram –Main Section (4/5)– 55
6-15. Schematic Diagram –Main Section (5/5)– 56
6-16. Printed Wiring Board –Display Section– 57
6-17. Schematic Diagram –Display Section– 58
6-18. Printed Wiring Board –Key Section– 59
6-19. Schematic Diagram –Key Section– 60
6-20. Printed Wiring Board –Power Section– 61
6-21. Schematic Diagram –Power Section– 62

7. EXPLODED VIEWS
7-1. Front Panel Section 67
7-2. Boards Section 68
7-3. DVD Mechanism Section 69

8. ELECTRICAL PARTS LIST 70

SECTION 1
GENERAL

This section is extracted from instruction manual.

Front Panel Controls

I / ⏻ (POWER) indicator
Switches the DVD Receiver ON and OFF.

STANDBY indicator
Lights red when the receiver is in Standby mode (off).

Disc Tray
Insert a disc here.

OPEN/CLOSE (⏏)
Opens or closes the disc tray.

VOLUME Control
Turn the knob clockwise to increase sound level, counterclockwise to decrease sound level.

STOP (■)
Stops playback of a disc.

PAUSE (❚❚)
Pause playback of a disc temporarily.

PLAY (►)
To play back a disc.

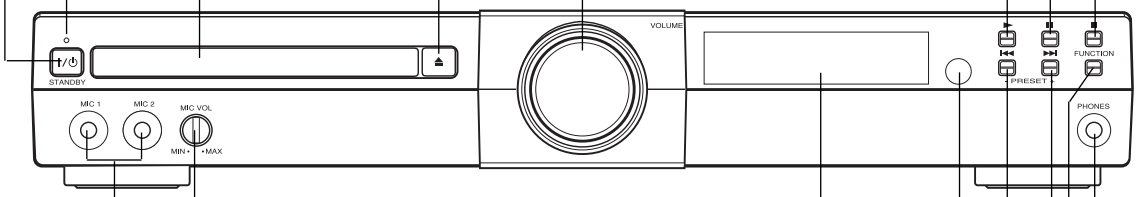

Display window

Remote Sensor
Point the DVD receiver remote control here.

Reverse SKIP (|◄◄)
DVD: Go to beginning of current chapter/track or to previous chapter/track.
RADIO: To select preset station you want.

Forward SKIP (►►|)
DVD: Go to NEXT chapter/track.
RADIO: To select preset station you want.

FUNCTION
To select the Receiver's source.
(FM, AM, VIDEO, TV or CD/DVD)

MIC VOL (MIN/MAX)
Adjust the microphone volume.

MIC1, MIC2
To connect microphone.

PHONES
To connect headphones.

Display Window Indicators

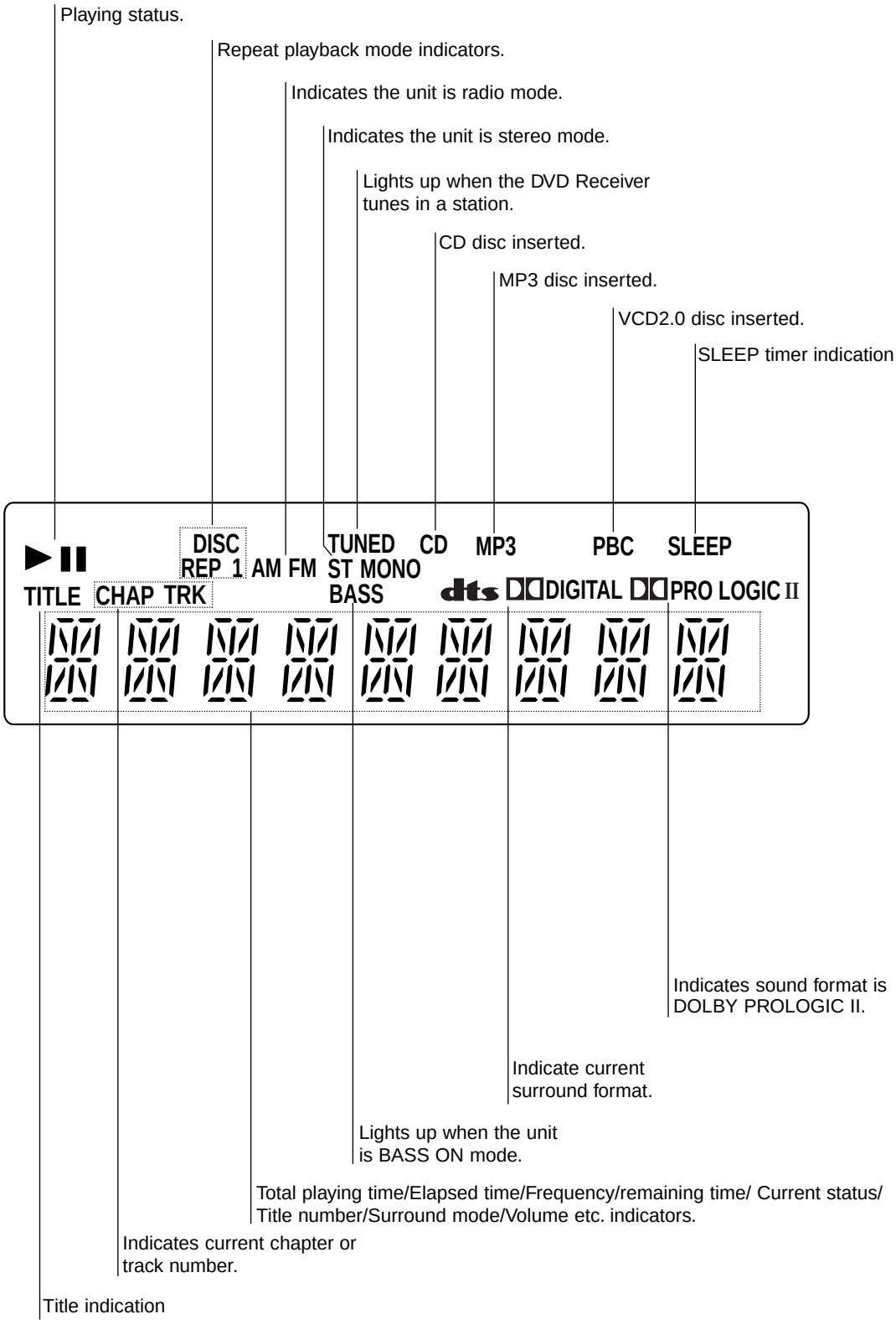

Remote Control

OPEN/CLOSE
Opens and closes the disc tray.

TV/VIDEO
Selects the TV's source.

0-9 numerical buttons
Selects numbered options in a menu.

>10/ TV ENTER
Used to control TV.

Playback Control Buttons
▷ (PLAY)
Starts playback.
❚❚ (PAUSE)
Pause playback or recording temporarily.
■ (STOP)
Stops playback.

PRESET-
Go to beginning of current chapter or track or go to previous chapter or track.
Select programme of Tuner.
PRESET+
Go to next chapter or track.
Select programme of Tuner.
SLOW ◄❚/ TUNING-
For picture search or slow playback backward.
To tune in the desired station.
SLOW ❚►/TUNING+
For picture search or slow playback forward.
To tune in the desired station.

DVD TOP MENU
Displays the disc's Title menu, if available.

←/→/↑/↓ (left/right/up/down)
Selects an option in the menu.
ENTER
Acknowledges menu selection.

TV
To control TVs with the Remote.

REPEAT
Repeat chapter, track, title, all
SLEEP
To place the unit in the Sleep mode.
PROGRAM
Enters to the programme edit mode or exits from that.
DIMMER
To change the brightness of the display window.
KARAOKE
To display the Karaoke menu audio channel.
CLEAR
Removes a track number on the program menu.
DVD SETUP
Accesses or removes DVD setup menu.

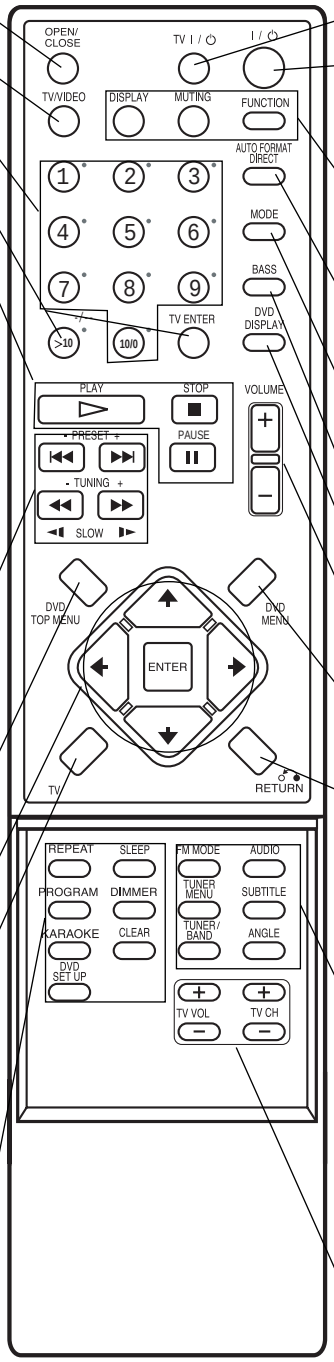

TV I / ⏻
Switches TV ON and OFF.
I / ⏻
Switches DVD Receiver ON and OFF.

DISPLAY
To display remaining time between Chapter and title.
To check the RDS service programme (PS).
MUTING
Momentarily silence the speaker of the DVD Receiver.
FUNCTION
To select the Receiver's source. (FM, AM, VIDEO, TV or CD/DVD)

AUTO FORMAT DIRECT
Selects sound mode between A.F.D. AUTO, PRO LOGIC, PLII MOVIE and PLII MUSIC.

MODE
Selects sound mode between FLAT, ROCK, POP, JAZZ, CLASSIC,NEWS and LINK.

BASS
Switches BASS ON and OFF.

DVD DISPLAY
Accesses On-Screen display.

VOLUME (+/-)
Adjusts speaker volume.

DVD MENU
Accesses menu on a DVD disc.

RETURN
Returns the setup menu.

FM MODE
To change between MONO and STEREO modes.
AUDIO
Selects an audio language (DVD) or an audio channel (CD).
TUNER MENU
Memorize a radio station frequency into the tuner.
Press to clear preset stations from the tuner memory.
SUBTITLE
Selects a subtitle language.
TUNER/BAND
Selects the DVD Receiver's tuner as the listening choice. (FM and AM bands)
ANGLE
Selects a DVD camera angle if available.

TV VOL +/–
Adjusts TV's volume.
TV CH +/–
Selects TV's channel.

INTRODUCTION

AEP, UK, CET, RU MODEL

Rear Panel Connections

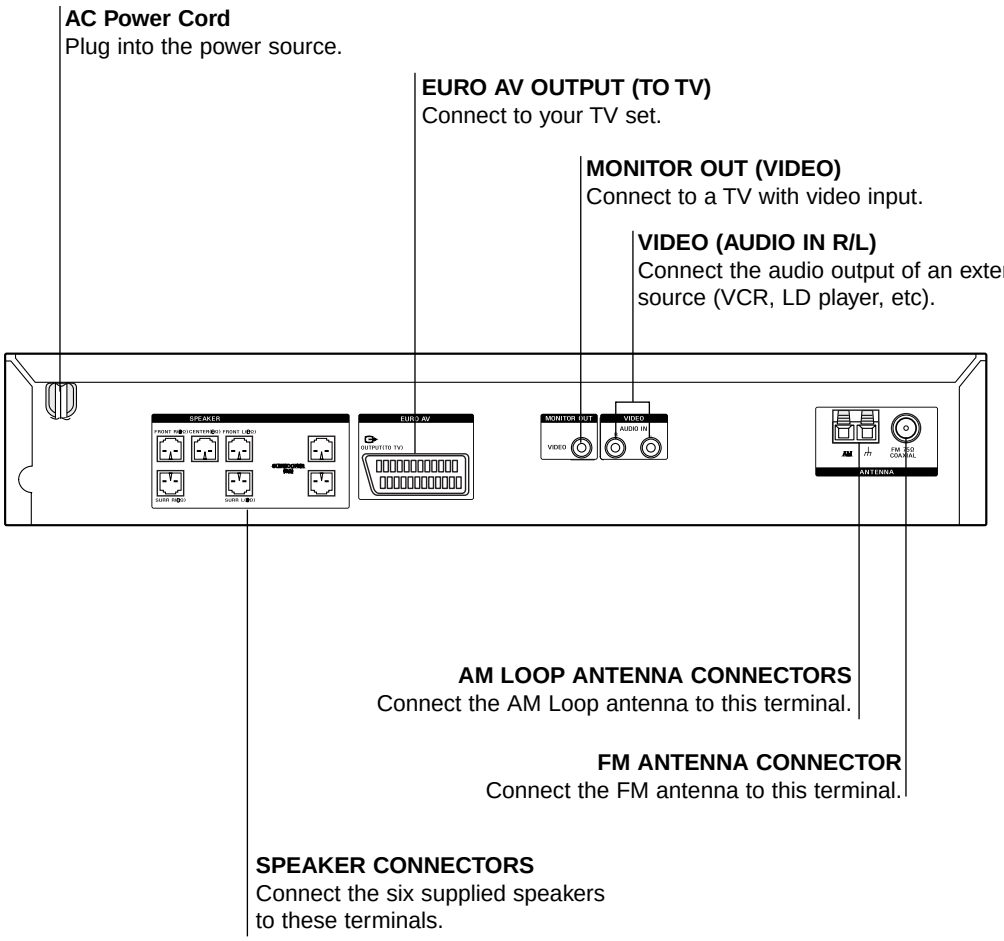

⚠

Do not touch the inner pins of the jacks on the rear panel. Electrostatic discharge may cause permanent damage to the unit.

Remote Control Operation Range

Point the remote control at the remote sensor and press the buttons.

- **Distance:** About 6m (20ft) from the front of the remote sensor
- **Angle:** About 30° in each direction of the front of the remote sensor

Remote control battery installation

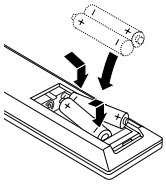

Detach the battery cover on the rear of the remote control, and insert two R03 (size AAA) batteries with ⊕ and ⊖ aligned correctly.
When using the remote control, point it at the remote sensor R on the unit.

⚠

Do not mix old and new batteries.

E3, E41, AUS, SP MODEL

Rear Panel Connections

AC Power Cord
Plug into the power source.

SPEAKER CONNECTORS
Connect the six supplied speakers to these terminals.

MONITOR OUT (VIDEO)
Connect to a TV with video input.

VIDEO (AUDIO IN L/R)
Connect the audio output of an external source (VCR, LD player, etc).

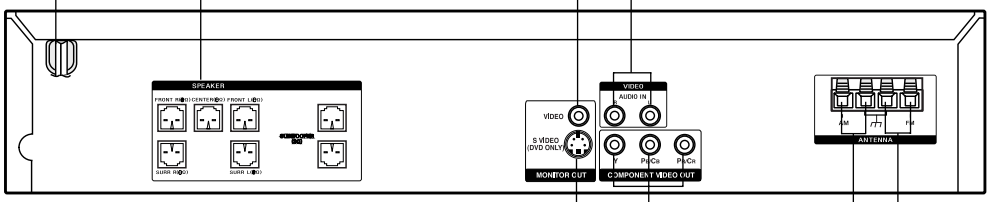

MONITOR S VIDEO OUT (DVD OUT)
Connect to a S Video Input on TV.
FOR DVD VIEWING ONLY.

COMPONENT VIDEO OUT (Y PB/CB PR/CR)
Connect to a TV with Y PB/CB PR/CR inputs.
FOR DVD VIEWING ONLY.

AM LOOP ANTENNA CONNECTORS
Connect the AM Loop antenna to this terminal.

FM ANTENNA CONNECTORS
Connect the FM antenna to this terminal.

⚠

Do not touch the inner pins of the jacks on the rear panel. Electrostatic discharge may cause permanent damage to the unit.

Remote Control Operation Range

Point the remote control at the remote sensor and press the buttons.

- **Distance:** About 6m (20ft) from the front of the remote sensor
- **Angle:** About 30° in each direction of the front of the remote sensor

Remote control battery installation

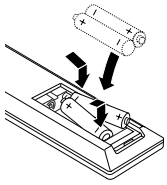

Detach the battery cover on the rear of the remote control, and insert two R03 (size AAA) batteries with ⊕ and ⊖ aligned correctly.
When using the remote control, point it at the remote sensor R on the unit.

⚠

Do not mix old and new batteries.

SECTION 2
DISASSEMBLY

Note : This set can be disassemble according to the following sequence.

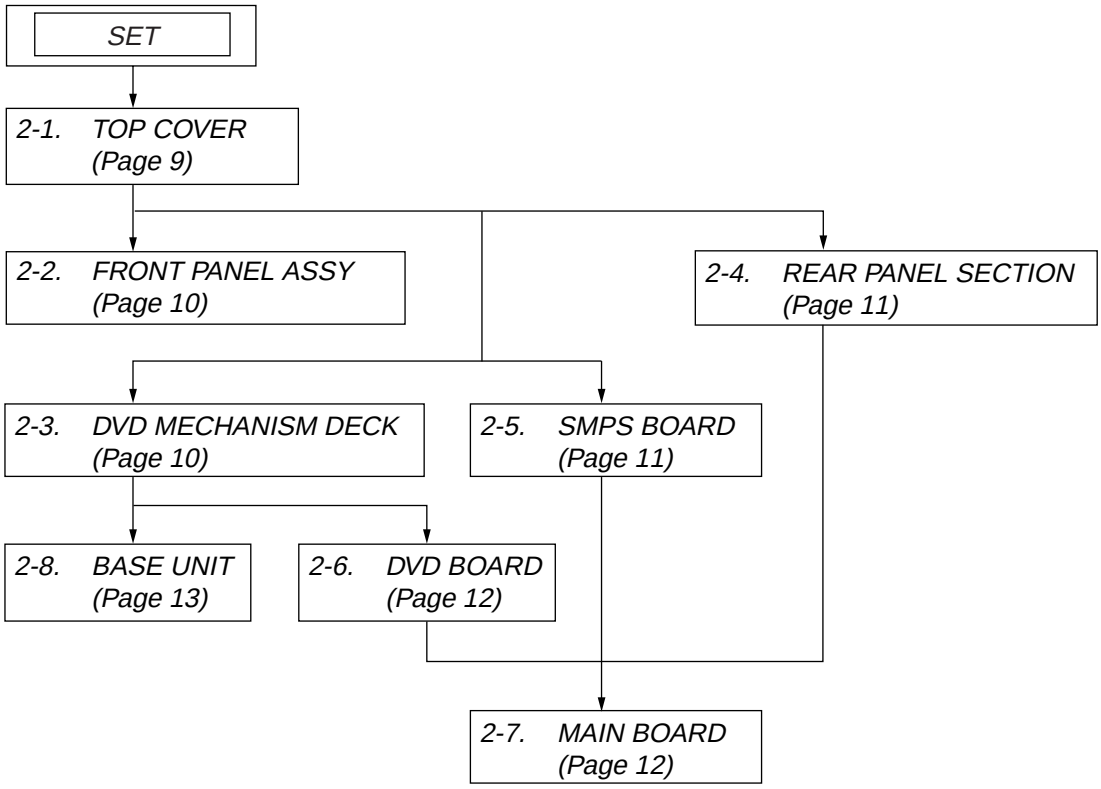

Note : Follow the disassembly procedure in the numerical order given.

2-1. TOP COVER

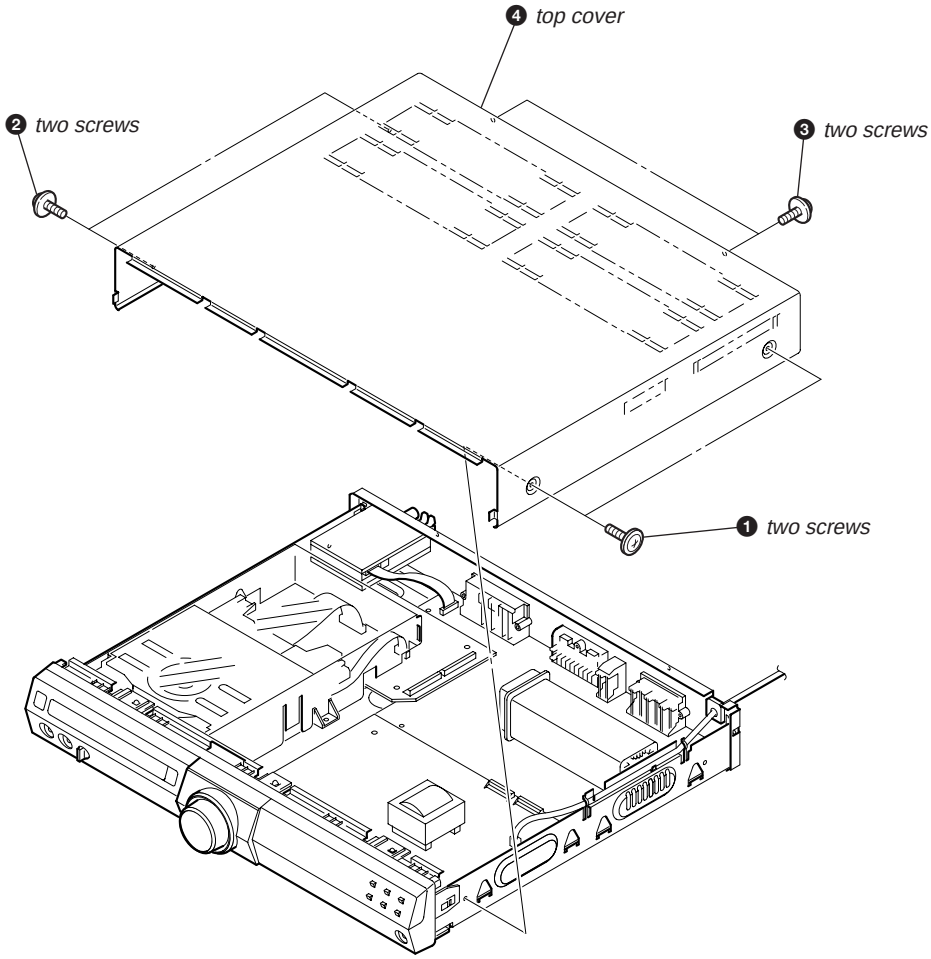

2-2. FRONT PANEL ASSY

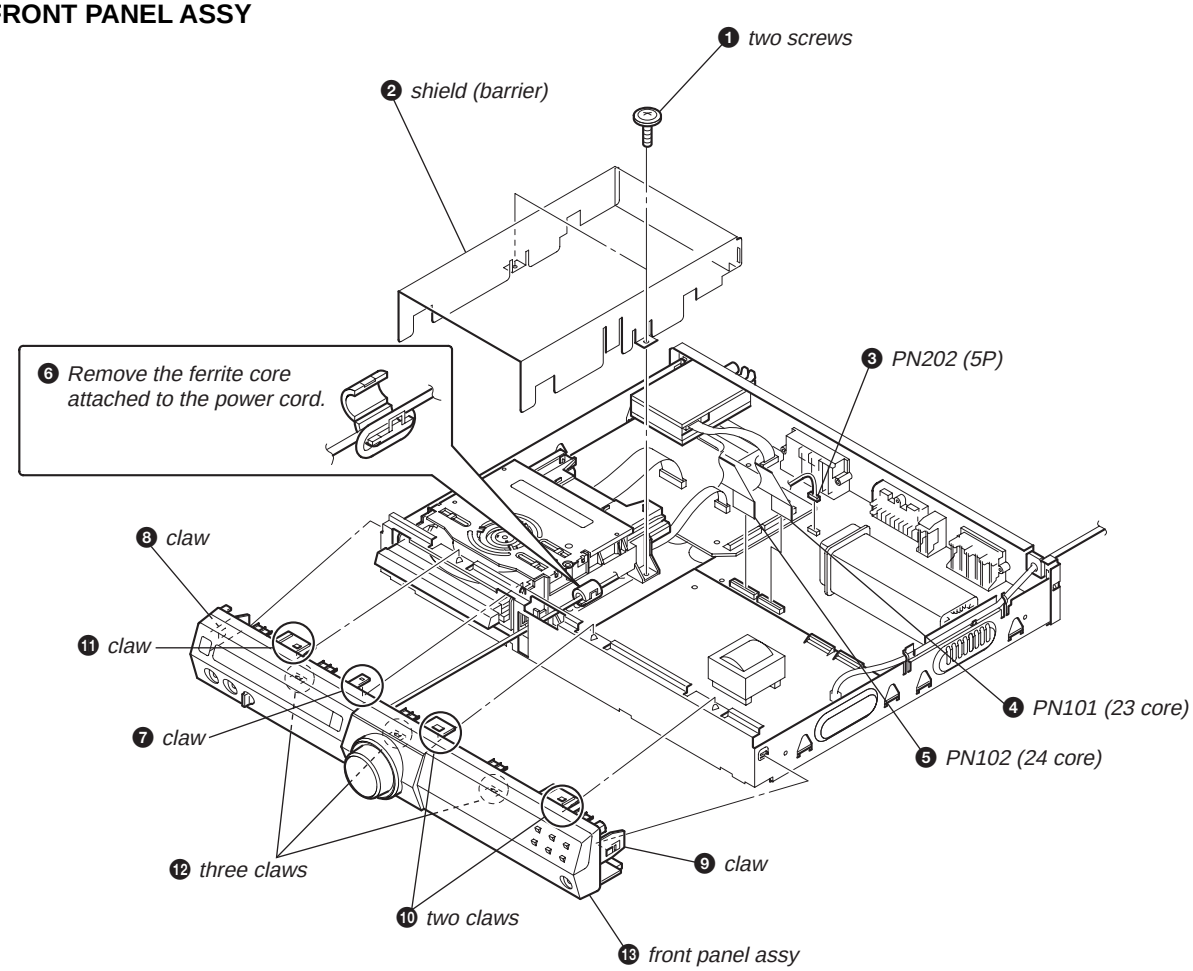

2-3. DVD MECHANISM DECK

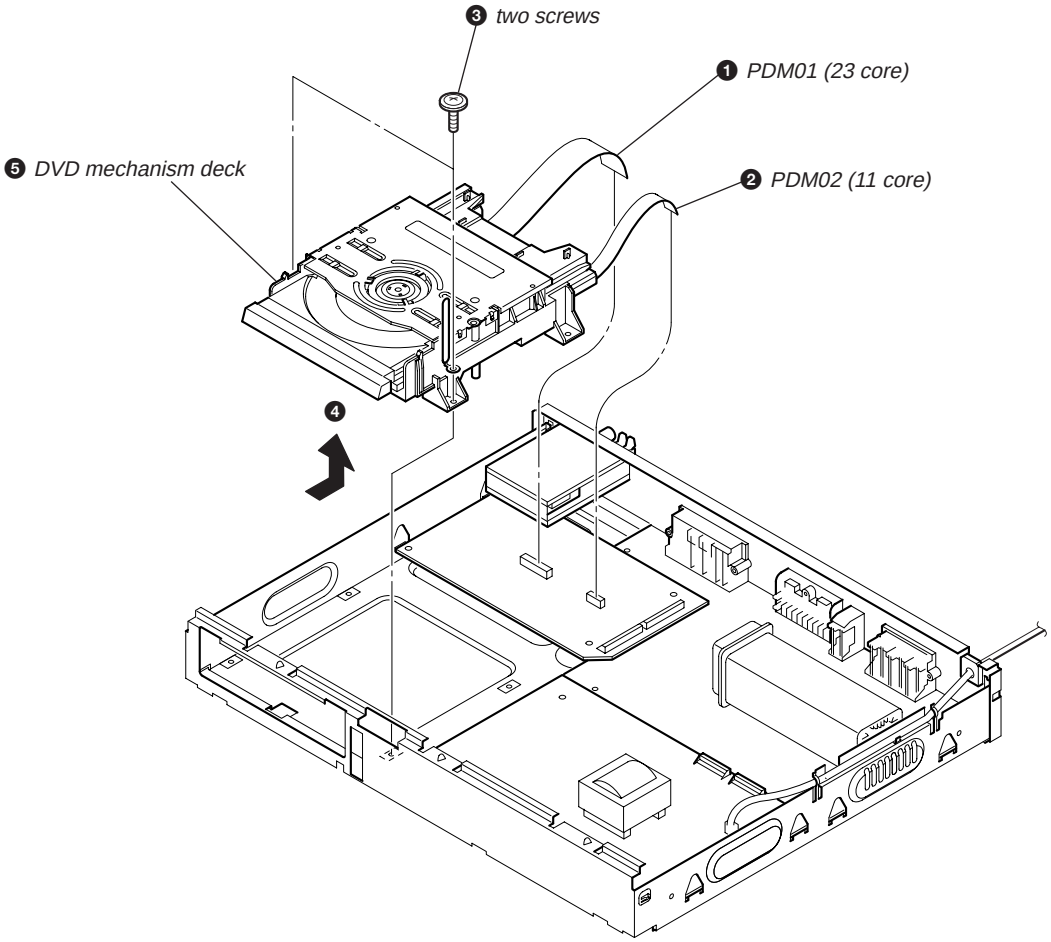

2-4. REAR PANEL SECTION

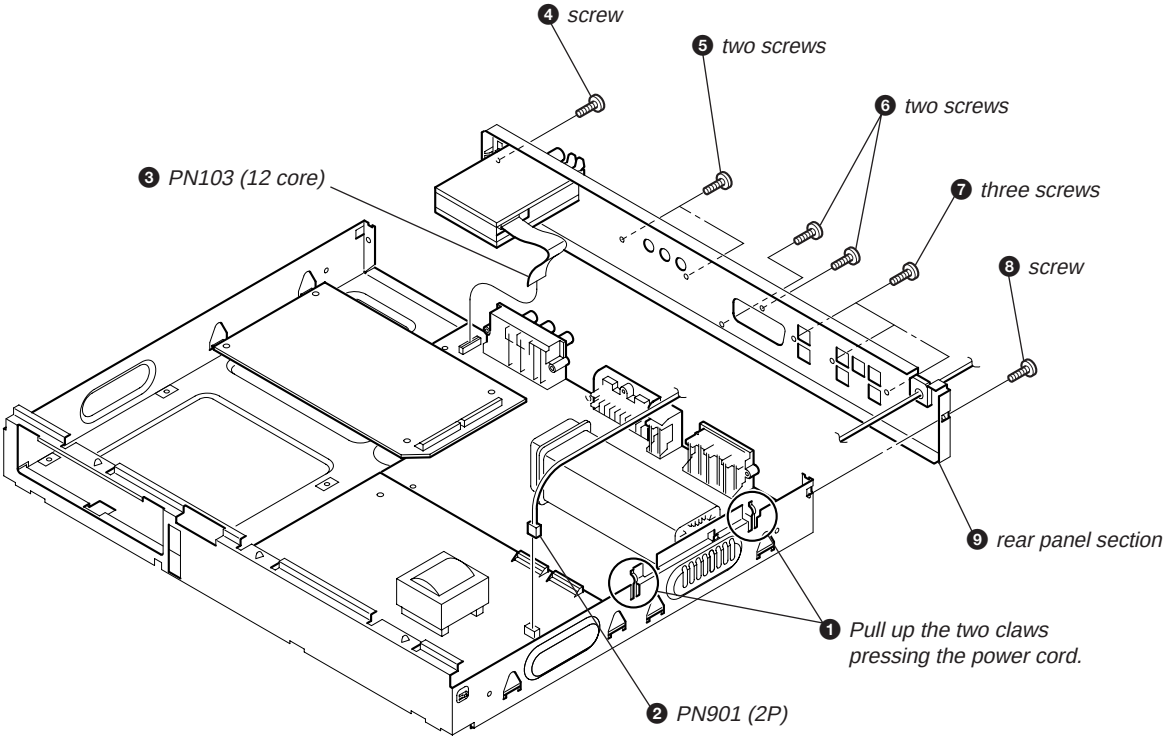

2-5. SMPS BOARD

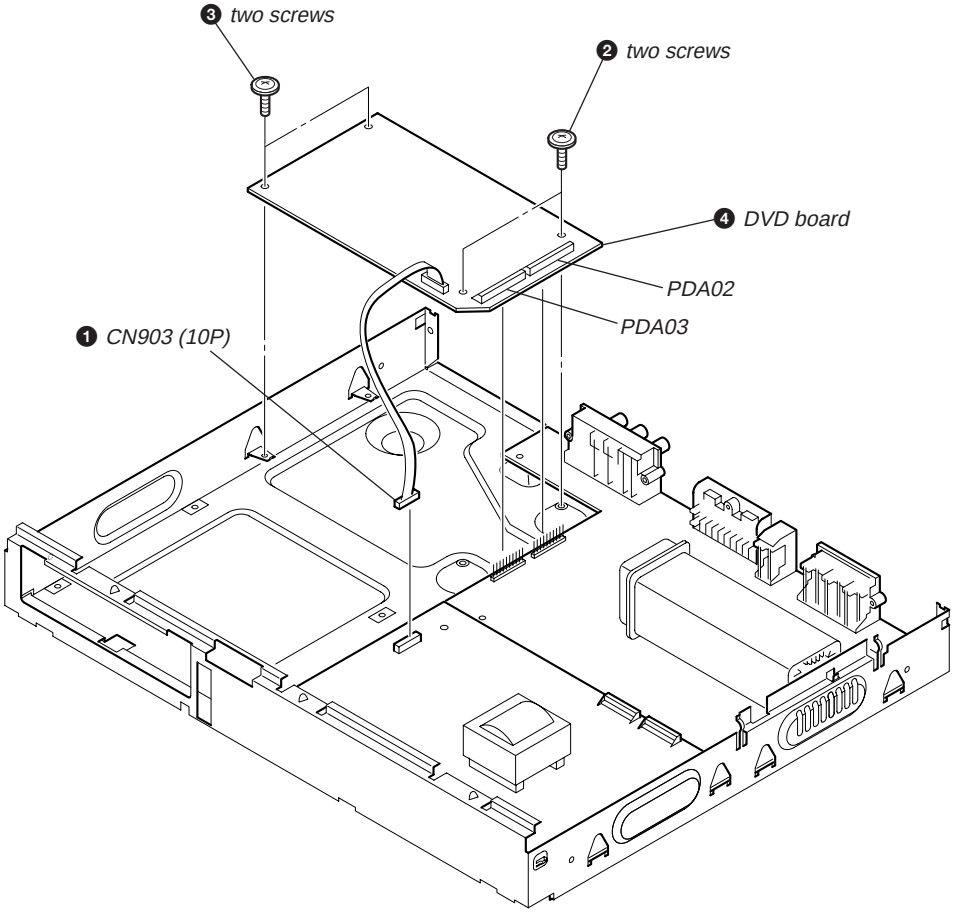

2-6. DVD BOARD

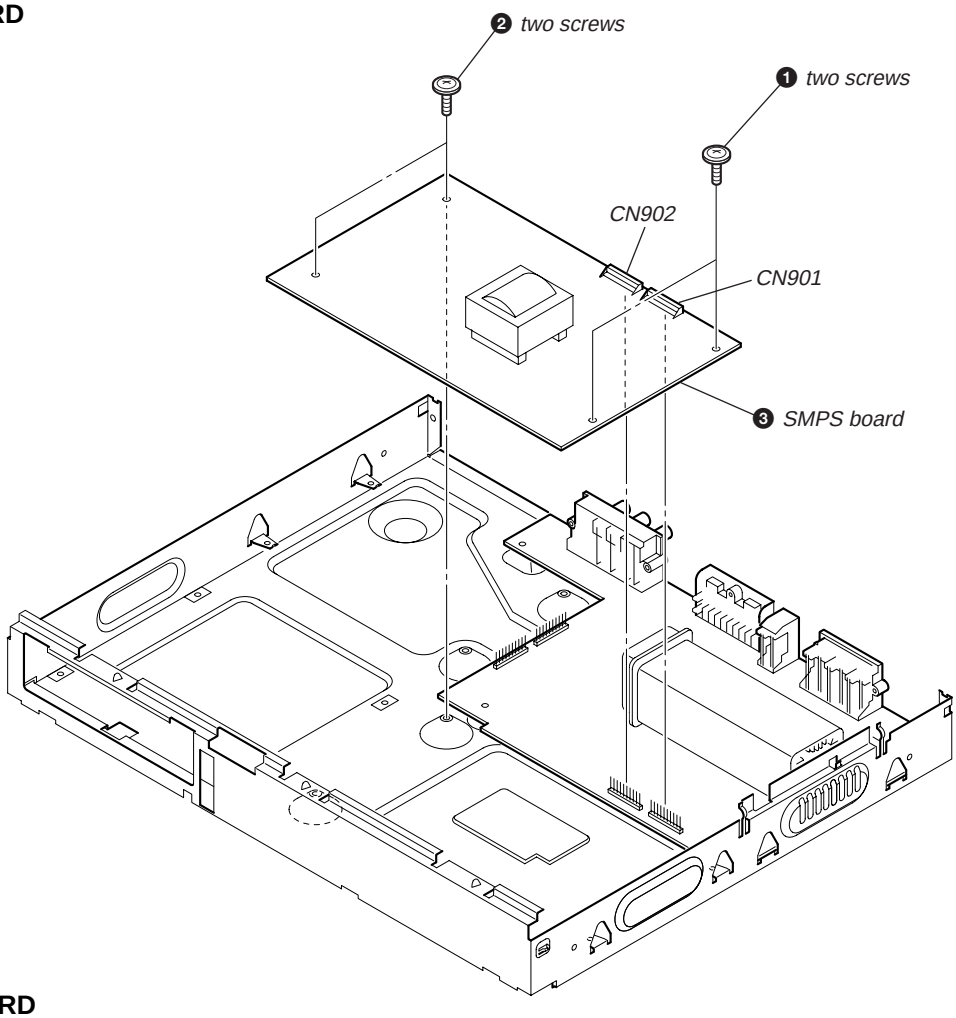

2-7. MAIN BOARD

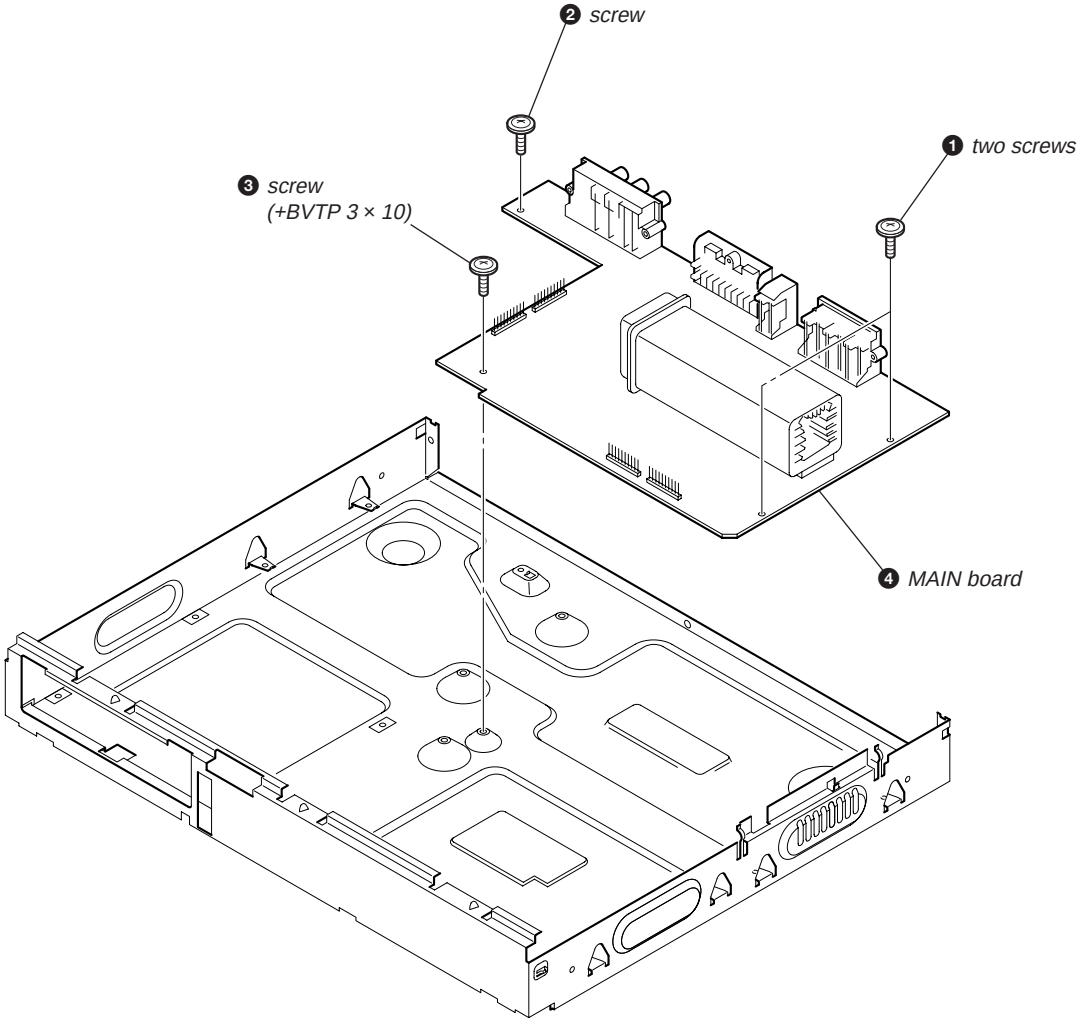

2-8. BASE UNIT

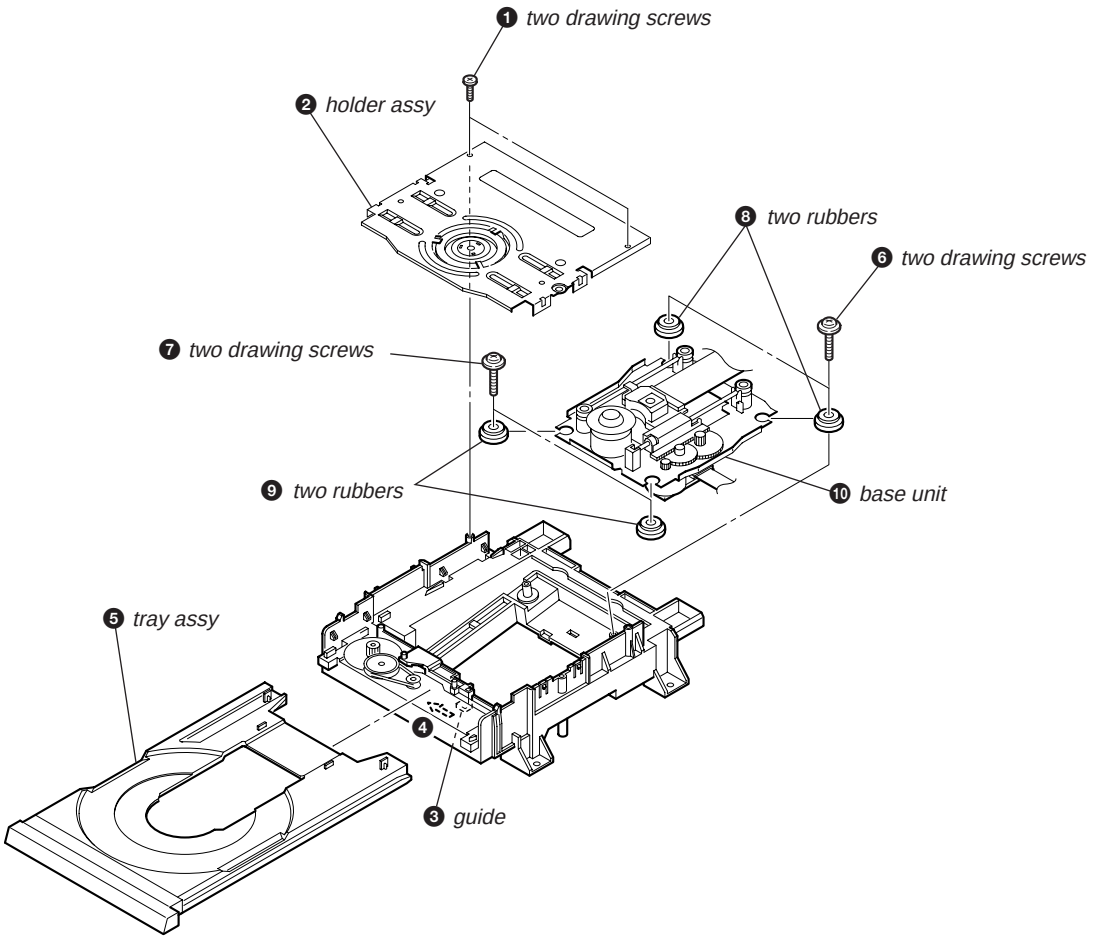
❶ two drawing screws
❷ holder assy
❽ two rubbers
❻ two drawing screws
❼ two drawing screws
❾ two rubbers
❿ base unit
❺ tray assy
❹
❸ guide

SECTION 3
ELECTRICAL TROUBLESHOOTING GUIDE

3-1. AUDIO PART

1. Power check flow

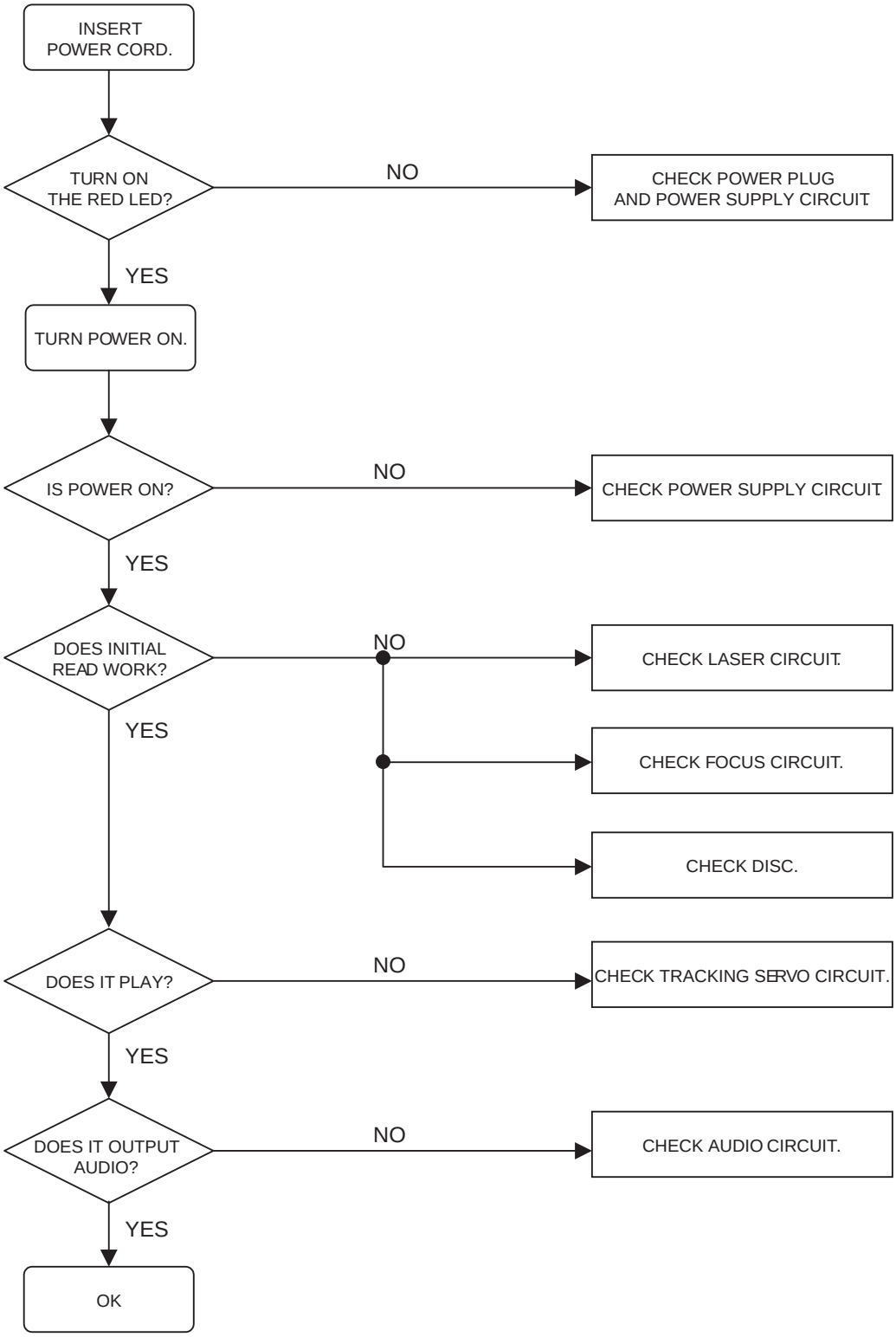

2. AUDIO µ.COM CIRCUIT

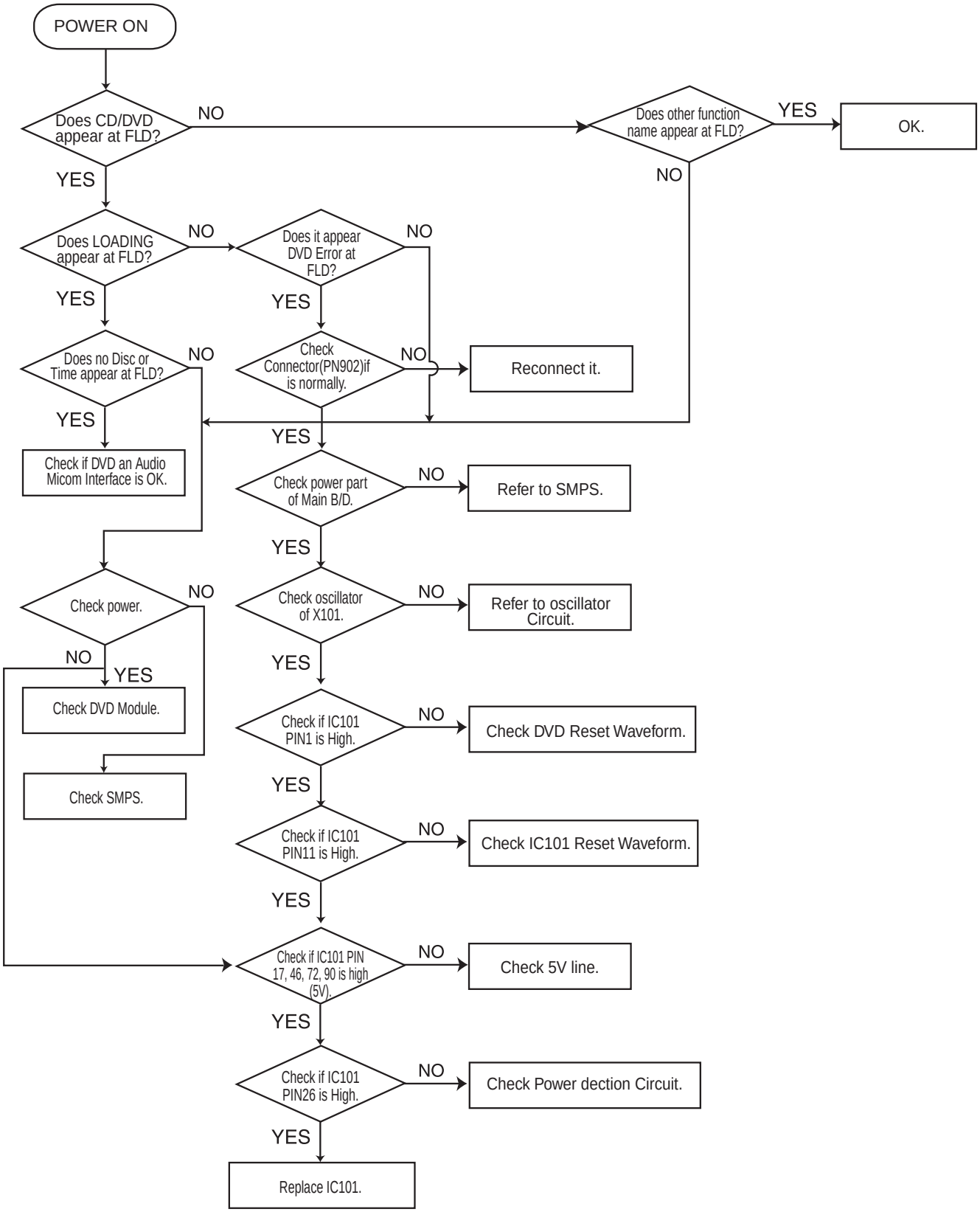

3. FRONT CIRCUIT (1/2)

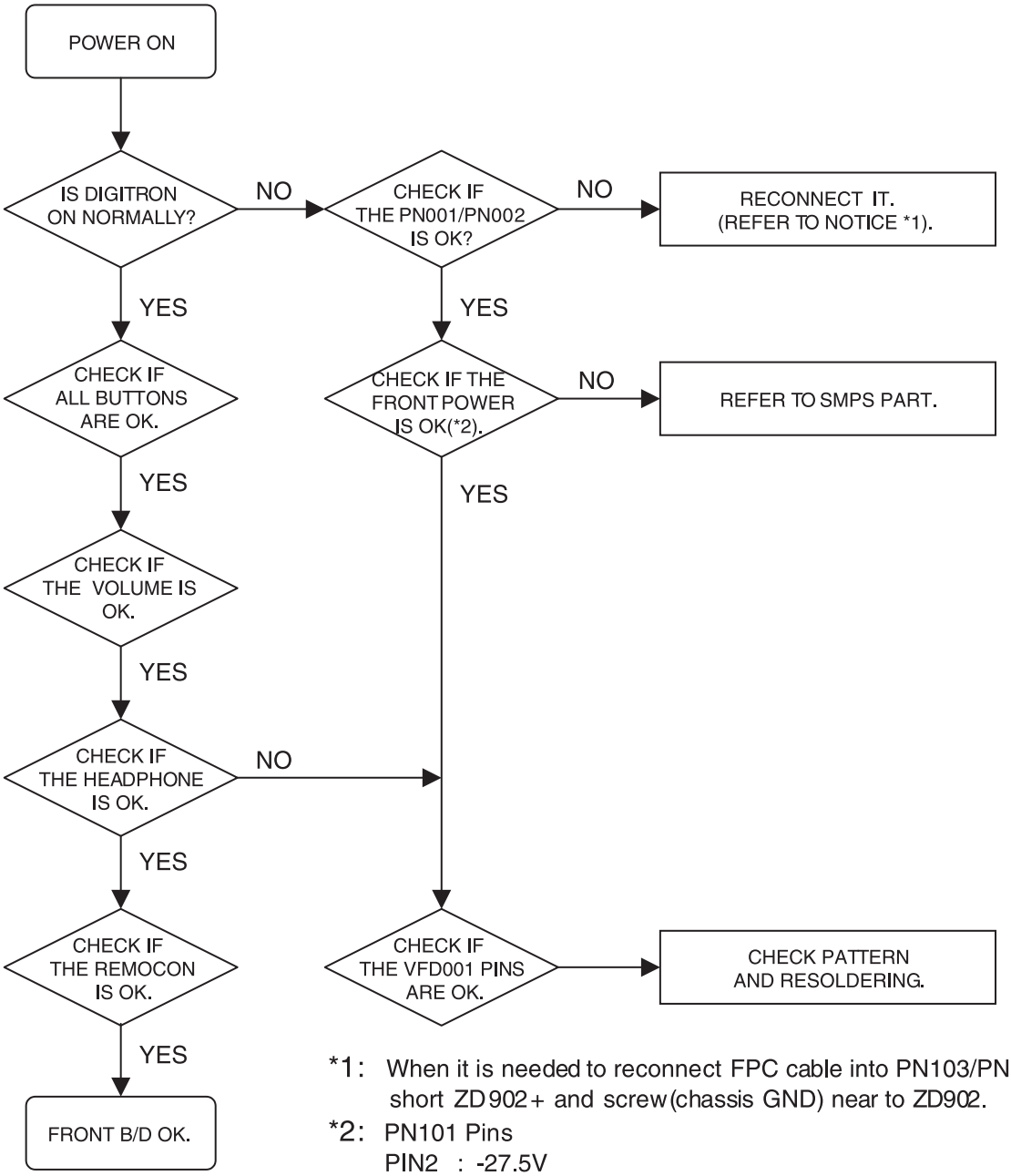

*1: When it is needed to reconnect FPC cable into PN103/PN104, short ZD902+ and screw (chassis GND) near to ZD902.

*2: PN101 Pins
PIN2 : -27.5V
PIN3 : -23.0V
PIN4 : 5.0V
PIN11 : -34.0V

4. FRONT CIRCUIT (2/2)

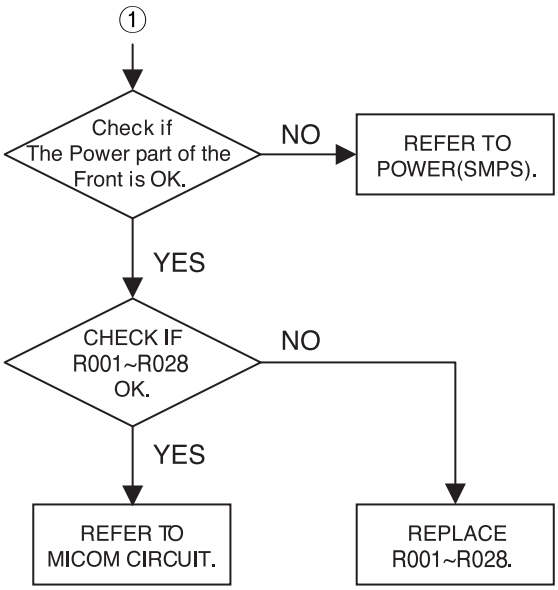

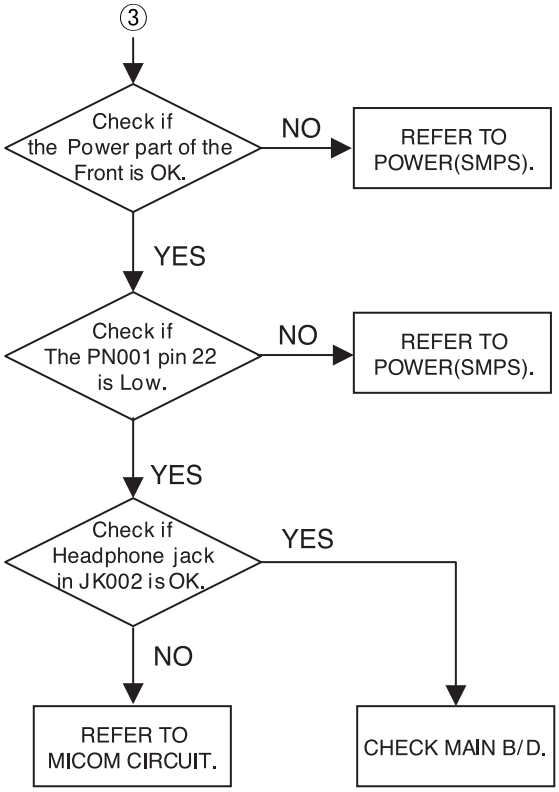

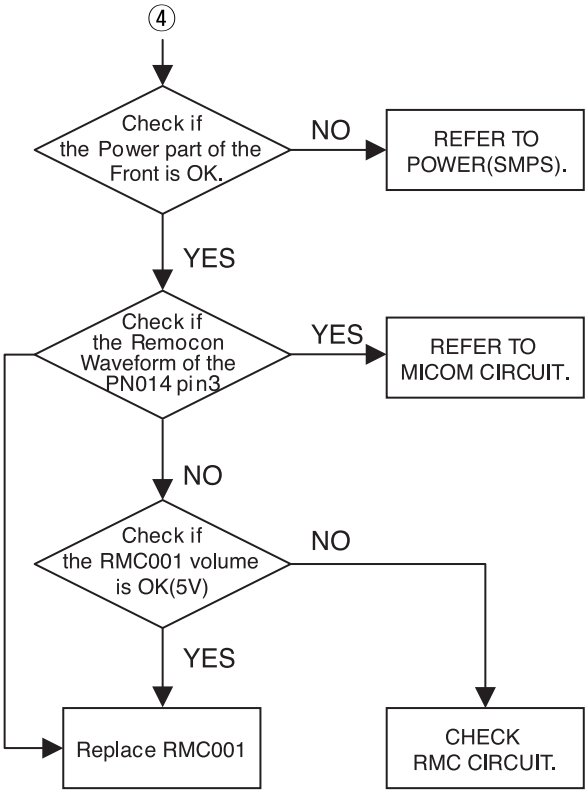

3-2. DVD PART

1. Power check flow

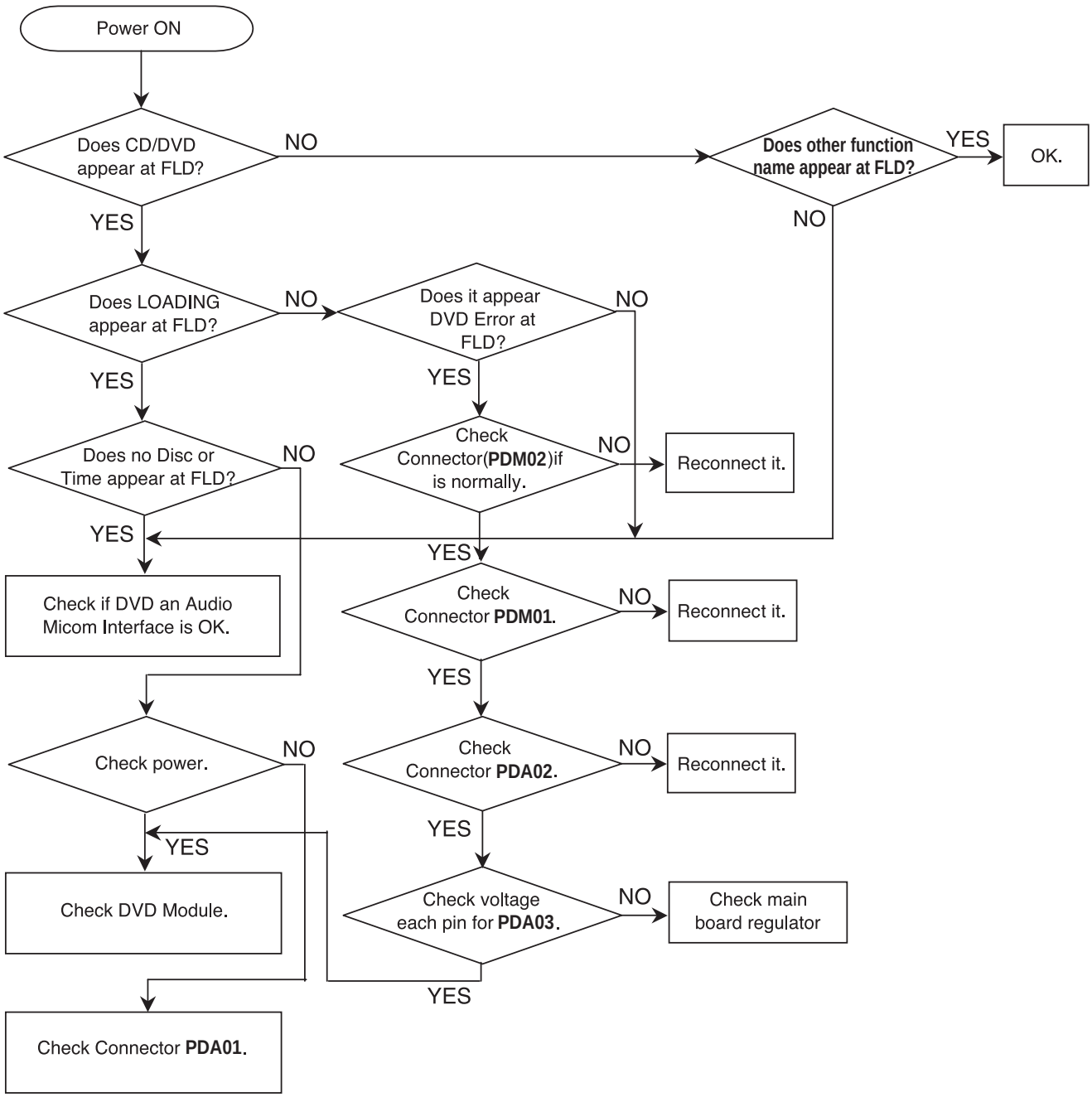

2. Test & debug flow

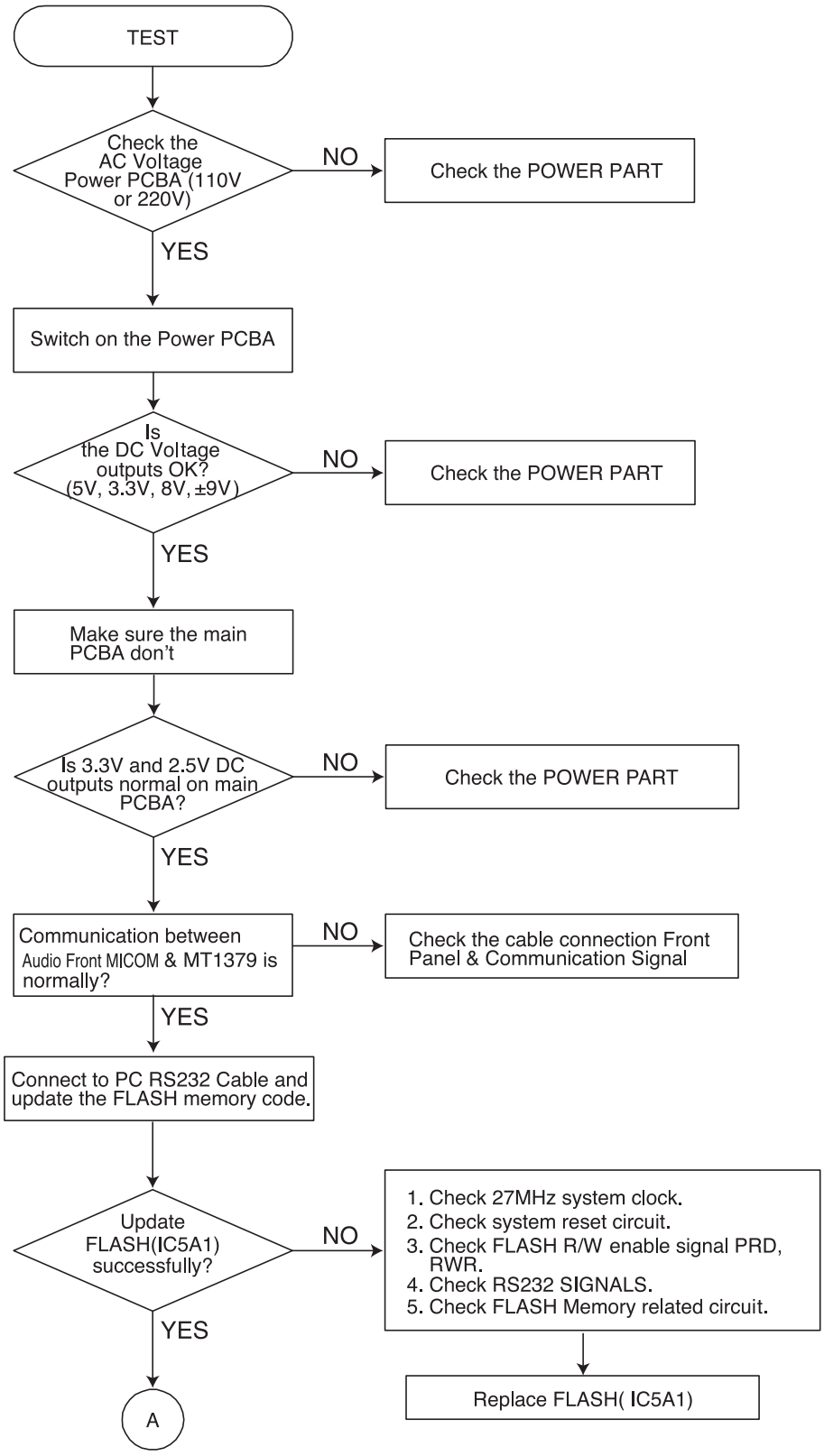

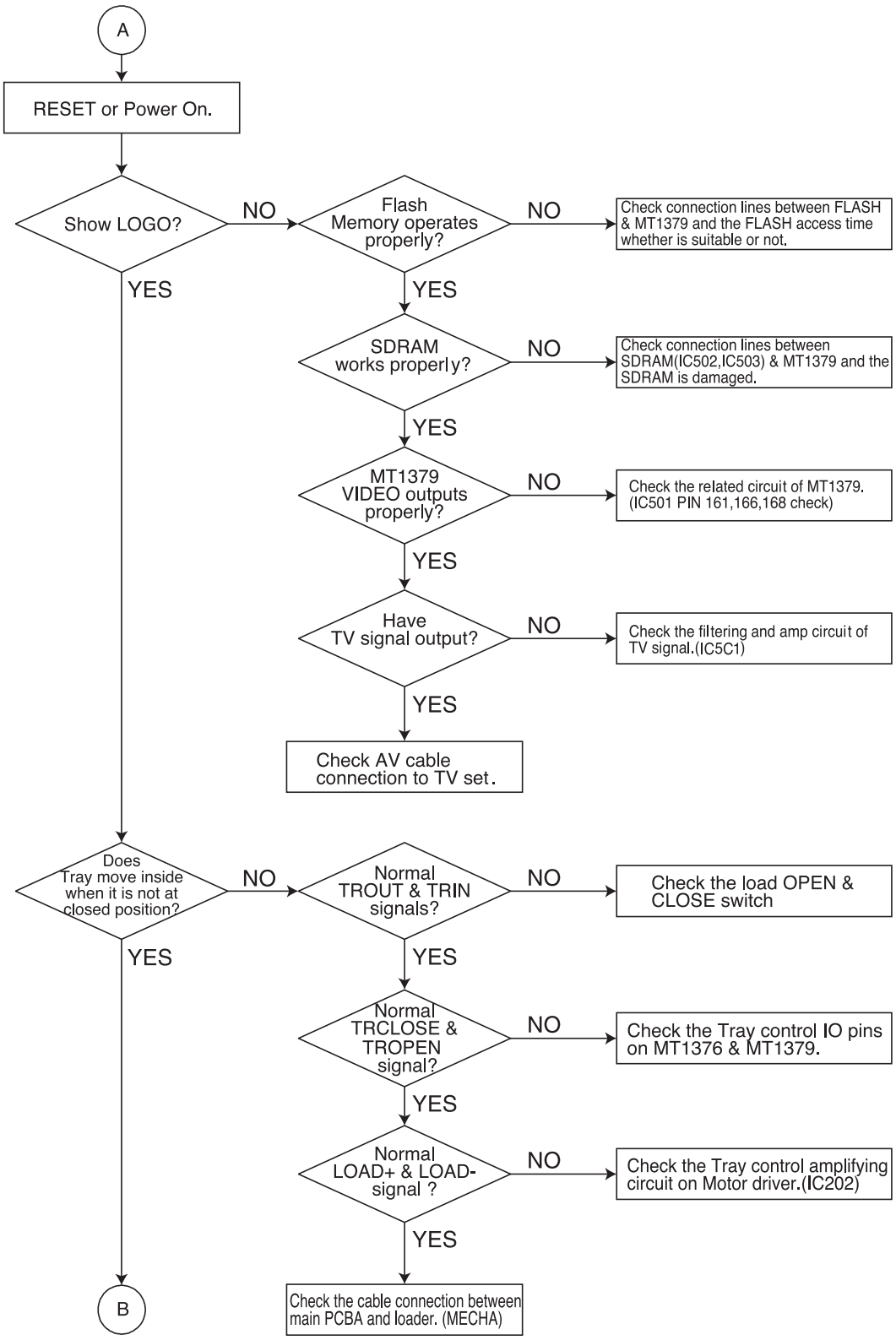
A
RESET or Power On.
Show LOGO?
NO
YES
Flash Memory operates properly?
NO
Check connection lines between FLASH & MT1379 and the FLASH access time whether is suitable or not.
YES
SDRAM works properly?
NO
Check connection lines between SDRAM(IC502,IC503) & MT1379 and the SDRAM is damaged.
YES
MT1379 VIDEO outputs properly?
NO
Check the related circuit of MT1379. (IC501 PIN 161,166,168 check)
YES
Have TV signal output?
NO
Check the filtering and amp circuit of TV signal.(IC5C1)
YES
Check AV cable connection to TV set.
Does Tray move inside when it is not at closed position?
NO
Normal TROUT & TRIN signals?
NO
Check the load OPEN & CLOSE switch
YES
YES
Normal TRCLOSE & TROPEN signal?
NO
Check the Tray control IO pins on MT1376 & MT1379.
YES
Normal LOAD+ & LOAD- signal ?
NO
Check the Tray control amplifying circuit on Motor driver.(IC202)
YES
Check the cable connection between main PCBA and loader. (MECHA)
B

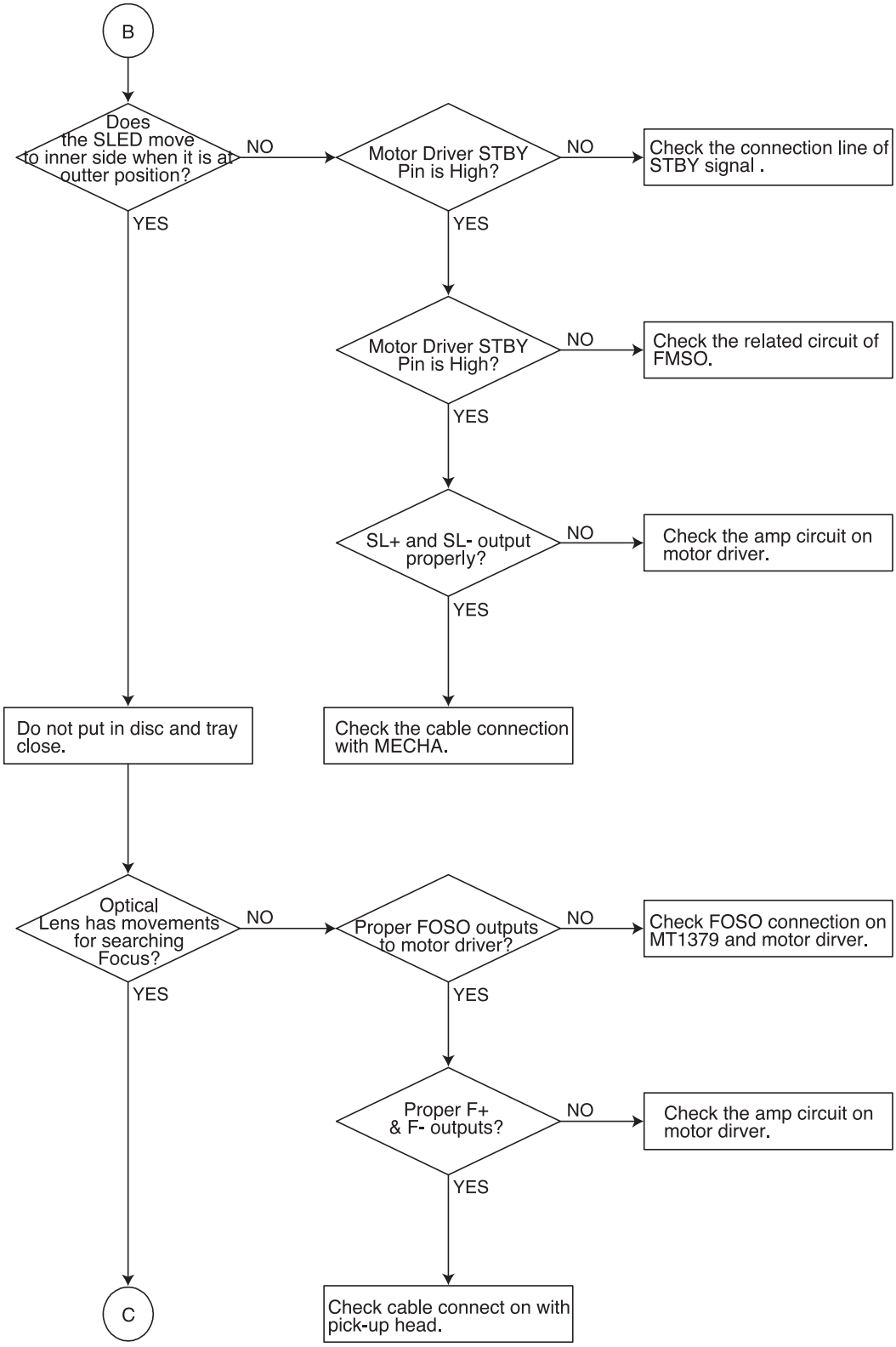
B
Does the SLED move to inner side when it is at outter position?
NO
YES
Motor Driver STBY Pin is High?
NO
Check the connection line of STBY signal .
YES
Motor Driver STBY Pin is High?
NO
Check the related circuit of FMSO.
YES
SL+ and SL- output properly?
NO
Check the amp circuit on motor driver.
YES
Do not put in disc and tray close.
Check the cable connection with MECHA.
Optical Lens has movements for searching Focus?
NO
YES
Proper FOSO outputs to motor driver?
NO
Check FOSO connection on MT1379 and motor dirver.
YES
Proper F+ & F- outputs?
NO
Check the amp circuit on motor dirver.
YES
C
Check cable connect on with pick-up head.

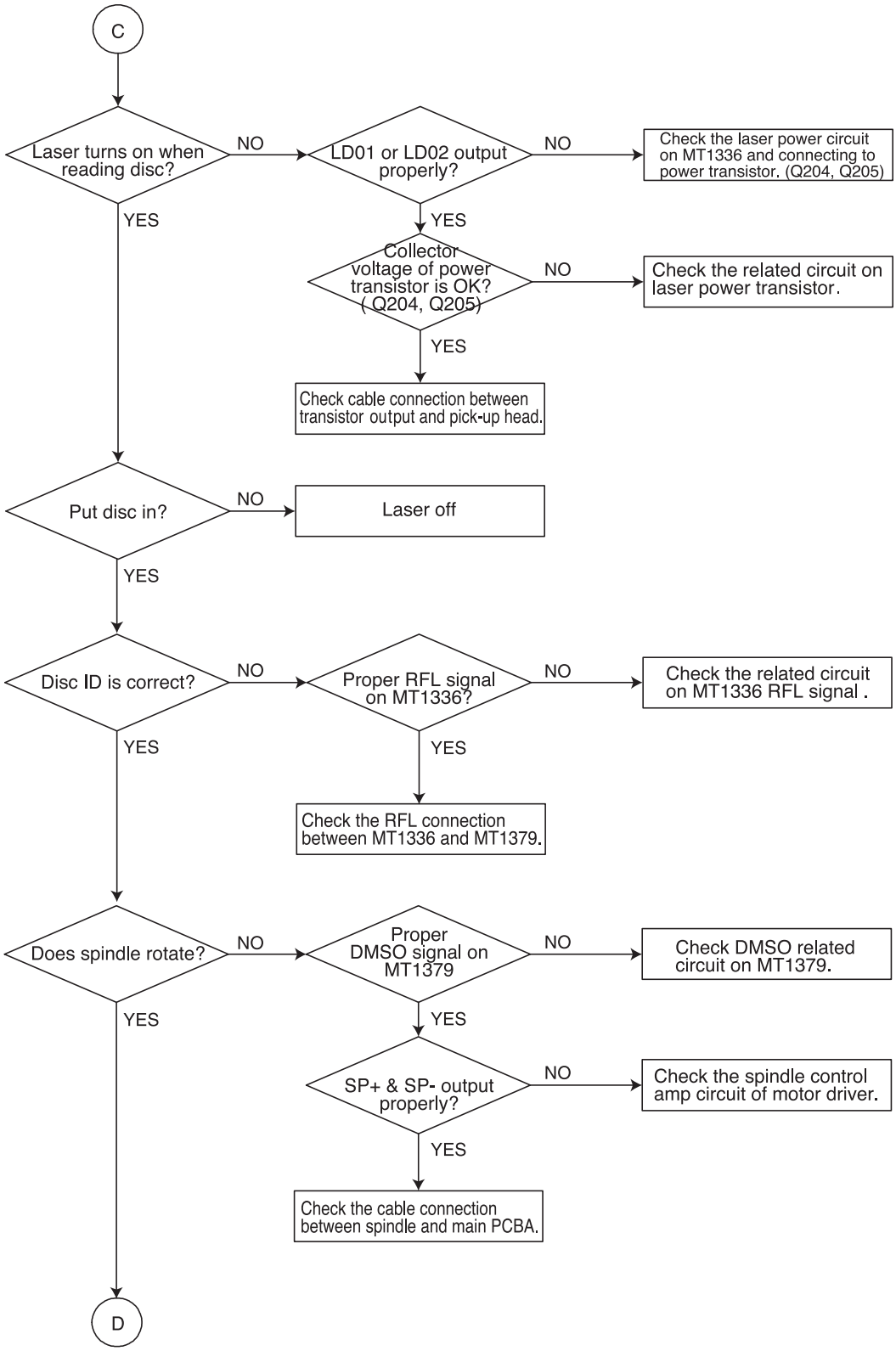
C
Laser turns on when reading disc?
NO
LD01 or LD02 output properly?
NO
Check the laser power circuit on MT1336 and connecting to power transistor. (Q204, Q205)
YES
YES
Collector voltage of power transistor is OK? (Q204, Q205)
NO
Check the related circuit on laser power transistor.
YES
Check cable connection between transistor output and pick-up head.
Put disc in?
NO
Laser off
YES
Disc ID is correct?
NO
Proper RFL signal on MT1336?
NO
Check the related circuit on MT1336 RFL signal .
YES
YES
Check the RFL connection between MT1336 and MT1379.
Does spindle rotate?
NO
Proper DMSO signal on MT1379
NO
Check DMSO related circuit on MT1379.
YES
YES
SP+ & SP- output properly?
NO
Check the spindle control amp circuit of motor driver.
YES
Check the cable connection between spindle and main PCBA.
D

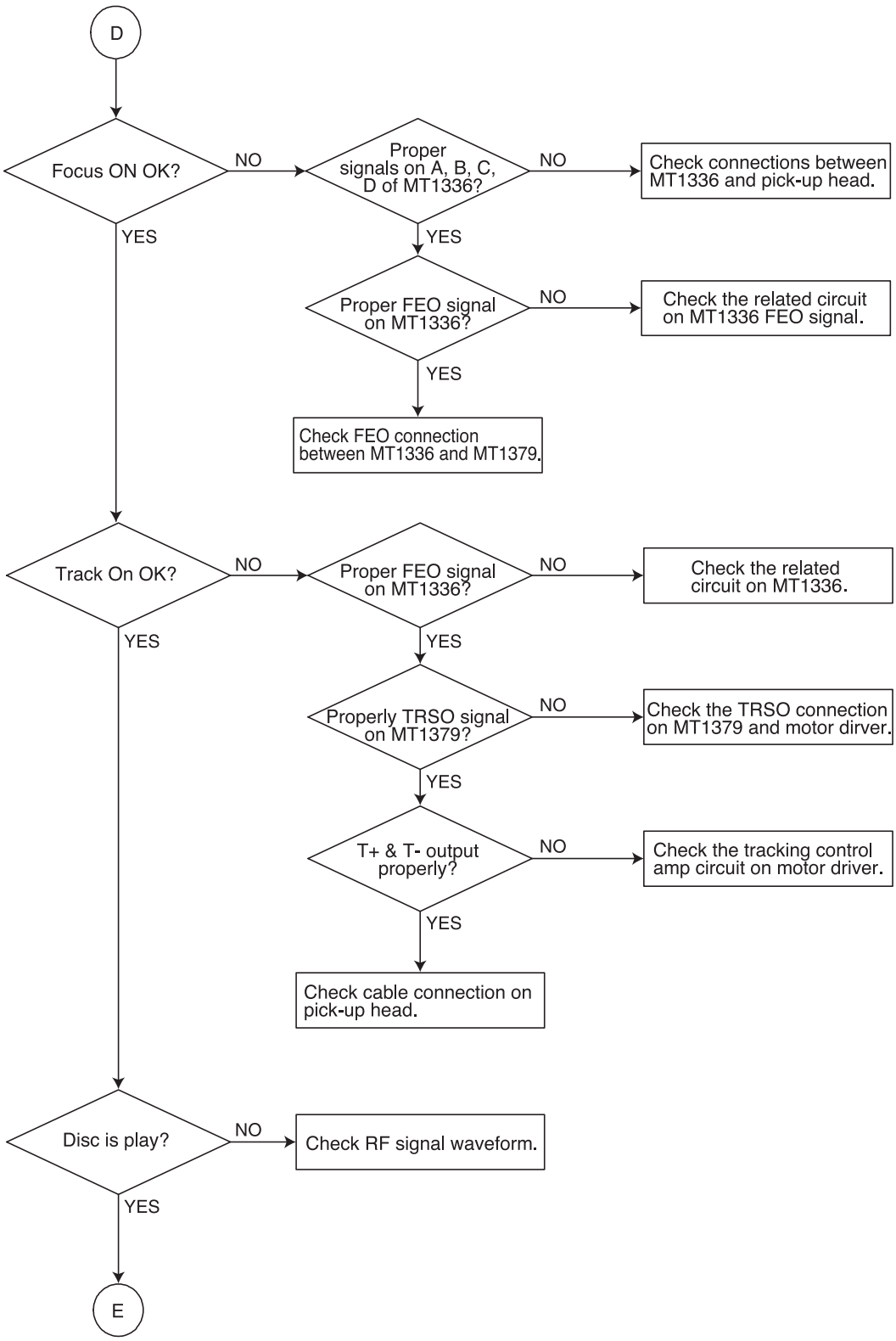
D
Focus ON OK?
NO
Proper signals on A, B, C, D of MT1336?
NO
Check connections between MT1336 and pick-up head.
YES
YES
Proper FEO signal on MT1336?
NO
Check the related circuit on MT1336 FEO signal.
YES
Check FEO connection between MT1336 and MT1379.
Track On OK?
NO
Proper FEO signal on MT1336?
NO
Check the related circuit on MT1336.
YES
YES
Properly TRSO signal on MT1379?
NO
Check the TRSO connection on MT1379 and motor dirver.
YES
T+ & T- output properly?
NO
Check the tracking control amp circuit on motor driver.
YES
Check cable connection on pick-up head.
Disc is play?
NO
Check RF signal waveform.
YES
E

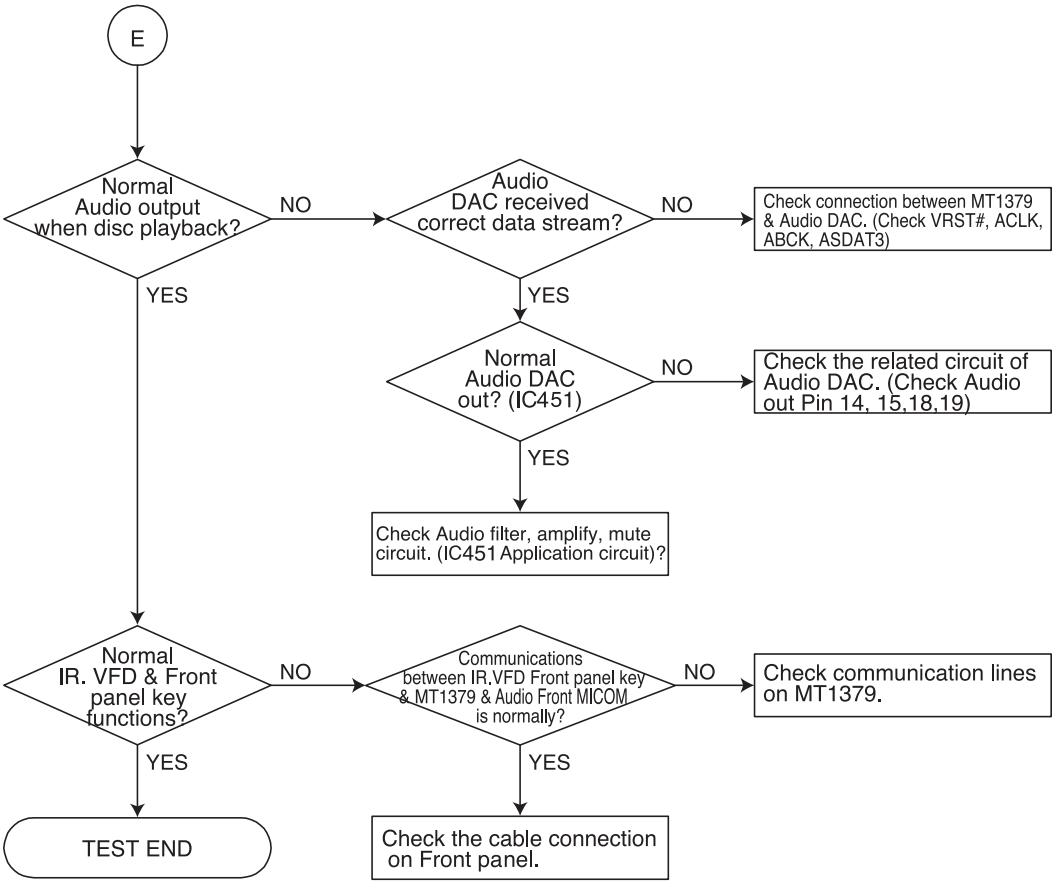
E
Normal Audio output when disc playback?
NO
Audio DAC received correct data stream?
NO
Check connection between MT1379 & Audio DAC. (Check VRST#, ACLK, ABCK, ASDAT3)
YES
YES
Normal Audio DAC out? (IC451)
NO
Check the related circuit of Audio DAC. (Check Audio out Pin 14, 15,18,19)
YES
Check Audio filter, amplify, mute circuit. (IC451 Application circuit)?
Normal IR. VFD & Front panel key functions?
NO
Communications between IR.VFD Front panel key & MT1379 & Audio Front MICOM is normally?
NO
Check communication lines on MT1379.
YES
YES
TEST END
Check the cable connection on Front panel.

3-3. DETAILS AND WAVEFORMS ON SYSTEM TEST AND DEBUGGING

1. SYSTEM 27MHz CLOCK, RESET, FLASH R/W SIGNAL

1) MT1379 main clock is at 27MHz (X501)

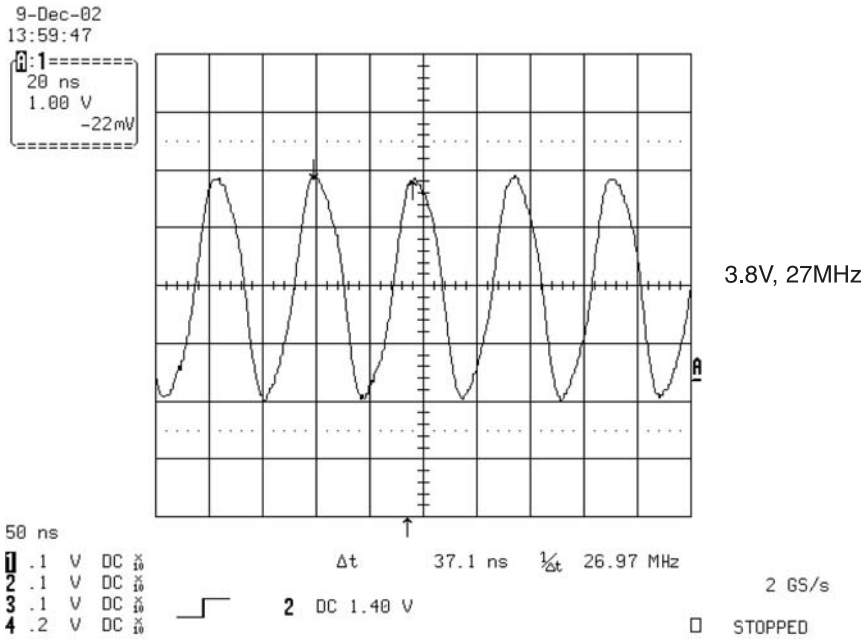

2) MT1336 reset is high active

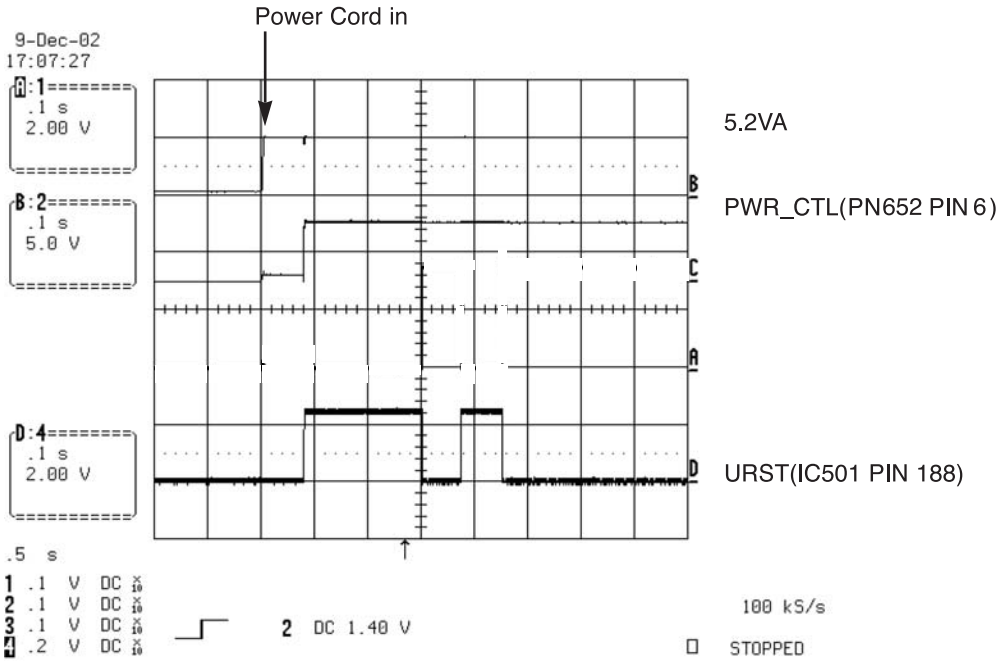

3) RS232 waveform during procedure (Downloading)

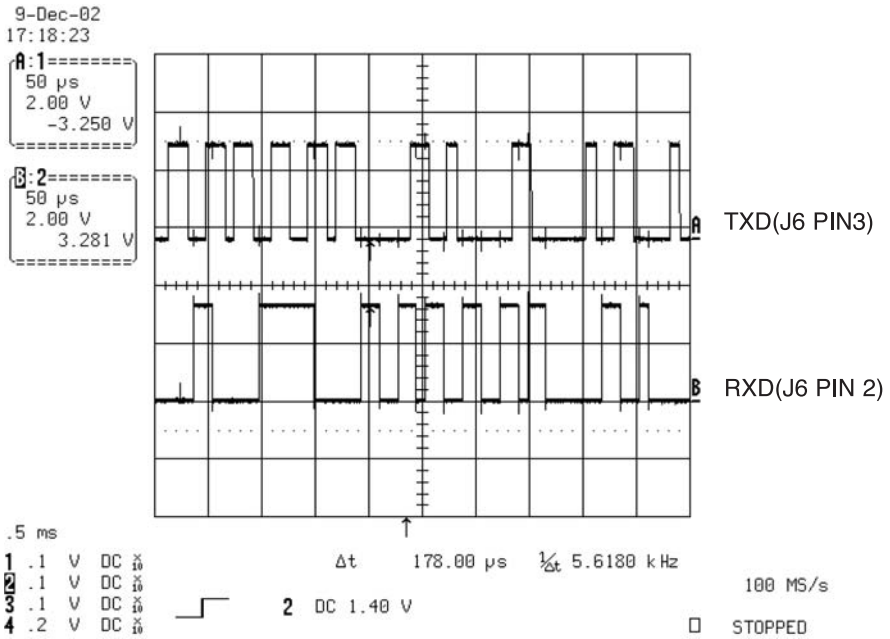

4) Flash R/W enable signal during download (Downloading)

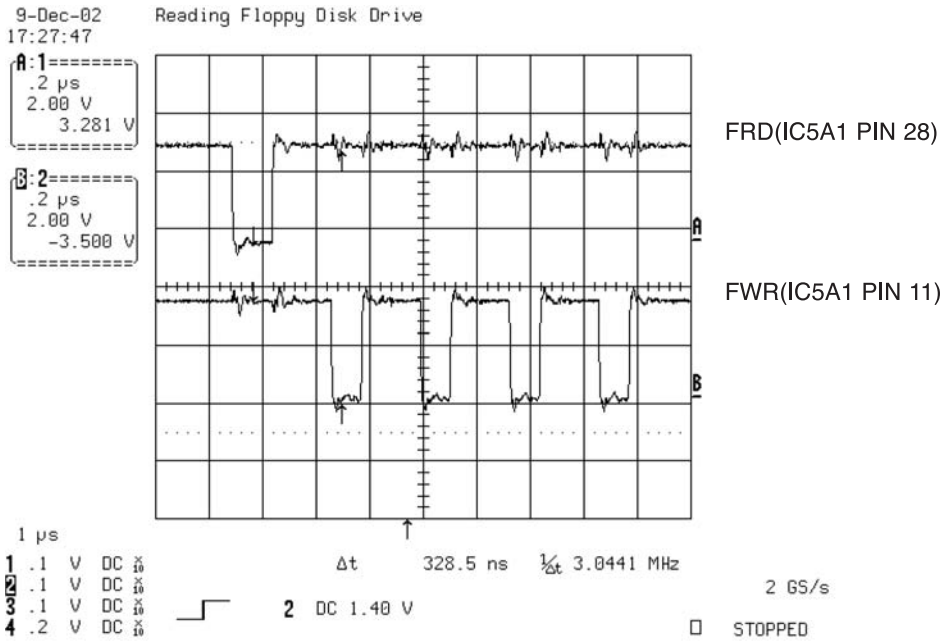

2. SDRAM CLOCK

1) MT1379 main clock is at 27MHz (X501)

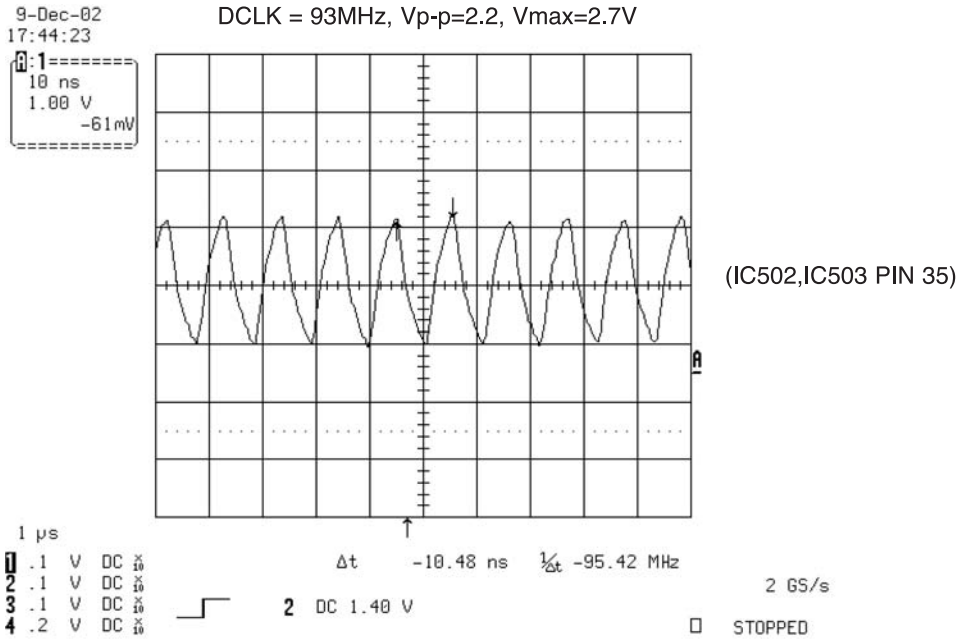

3. TRAY OPEN/CLOSE SIGNAL

1) Tray open/close waveform

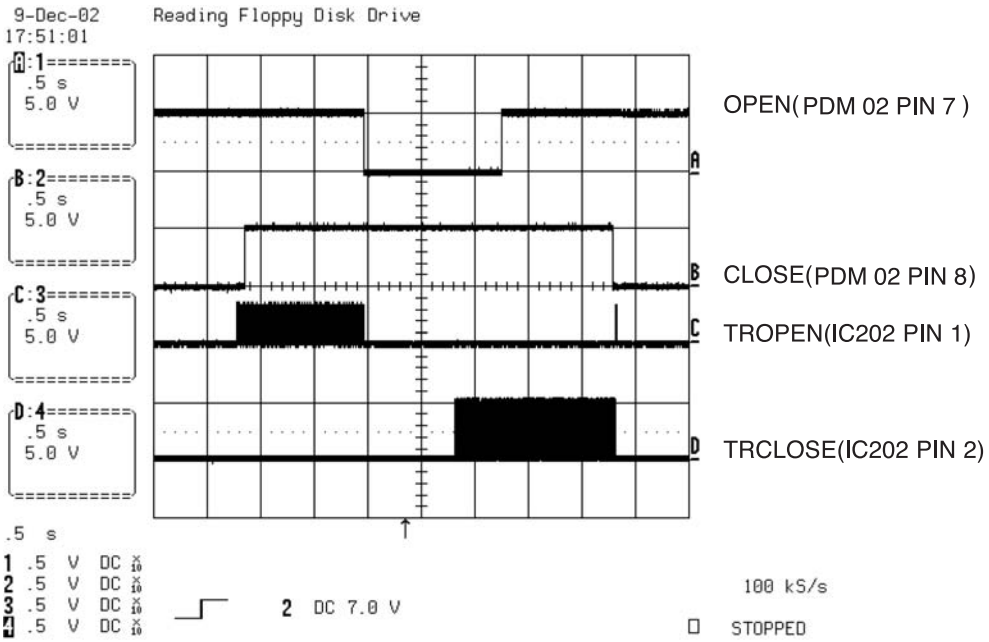

2) Tray close waveform

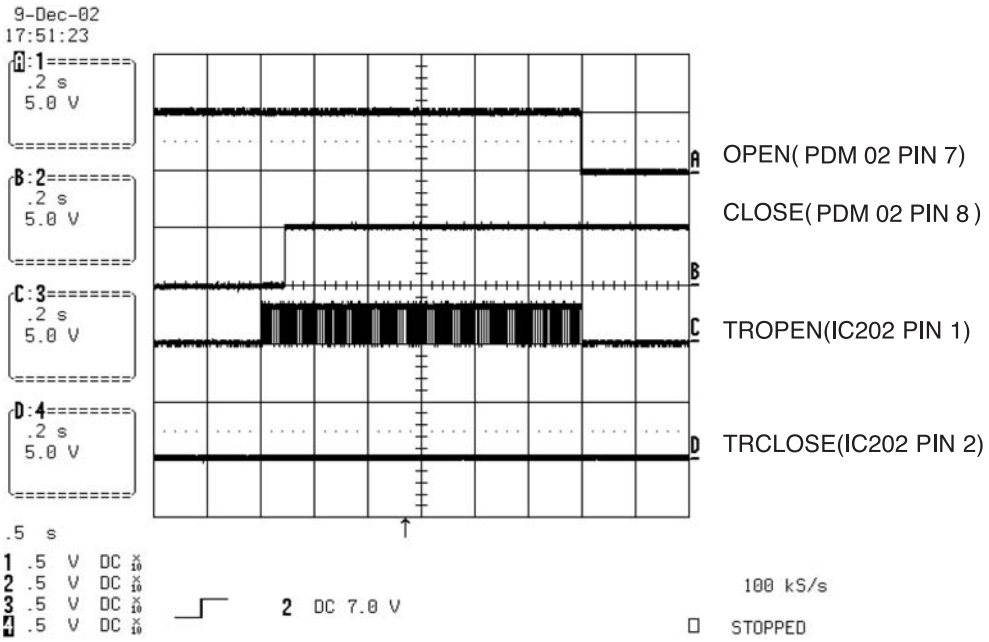

3) Tray open waveform

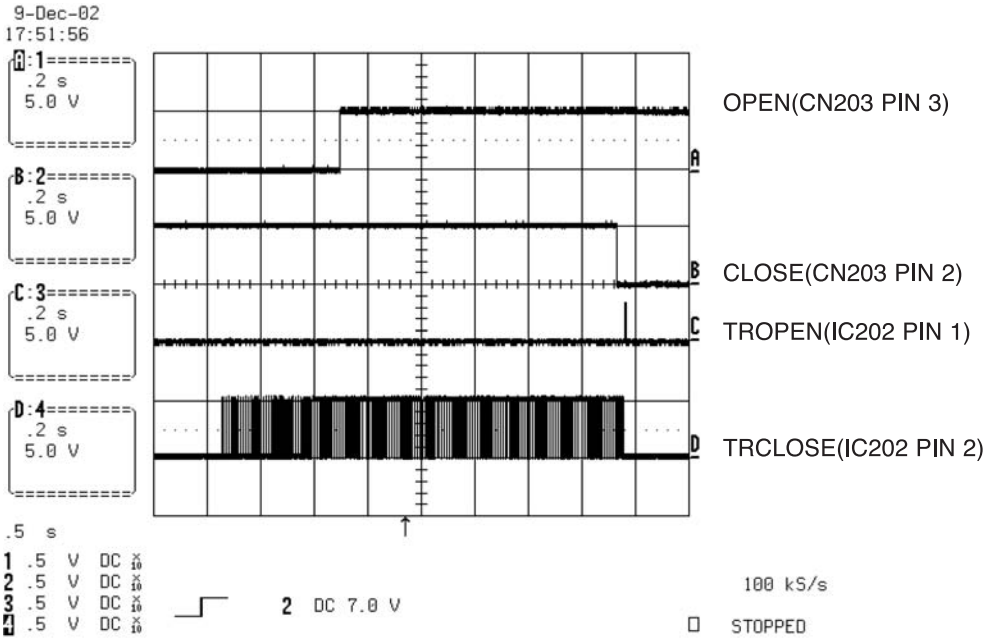

4. SLED CONTROL RELATED SIGNAL (NO DISC CONDITION)

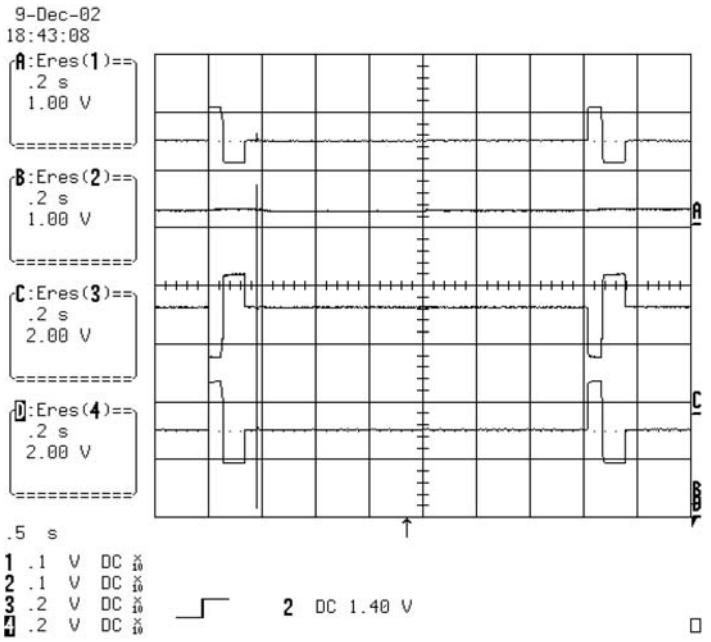

FMSO(2.0V/1.4V/1.0V)
(IC501 PIN 19)

STBY(5V) – (IC201 PIN 50)

SL+(4.7V/3.6V/1.9V)
(IC202 PIN 12)

SL-(5.3V/3.7V/2.5V)
(IC202 PIN 13)

5. LENS CONTROL RELATED SIGNAL (NO DISC CONDITION)

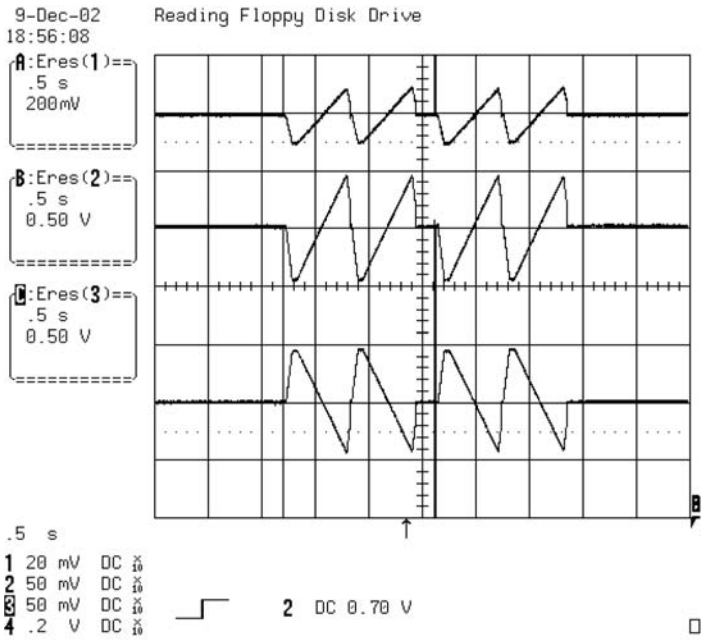

FOSO(1.5V/1.4V/1.3V)
(IC501 PIN 12)

F+(4.0V/3.6V/3.2V)
(IC202 PIN 9)

F-(4.0V/3.6V/3.2V)
(IC202 PIN 8)

6. LASER POWER CONTROL RELATED SIGNAL (NO DISC CONDITION)

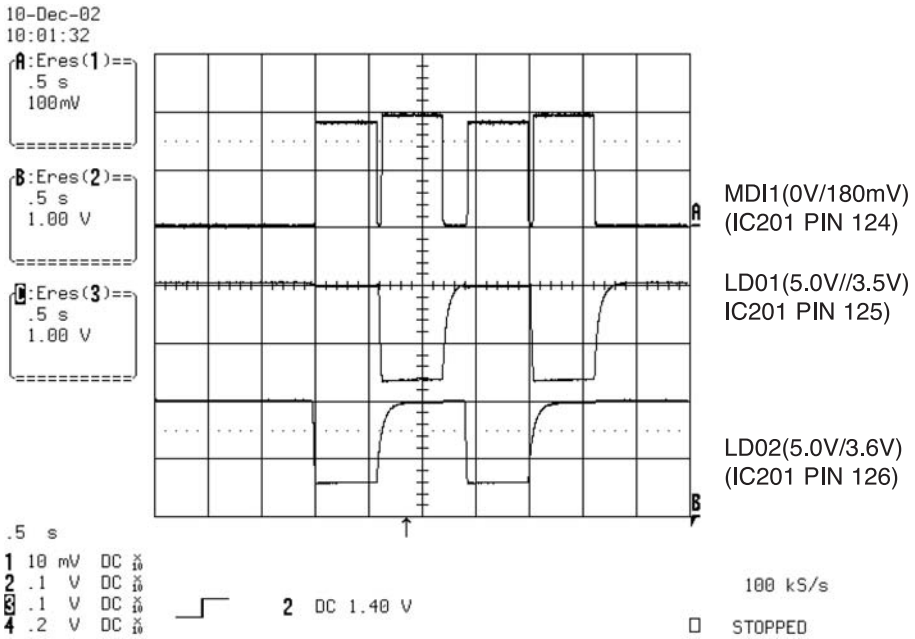

7. DISC TYPE JUDGEMENT WAVEFORM

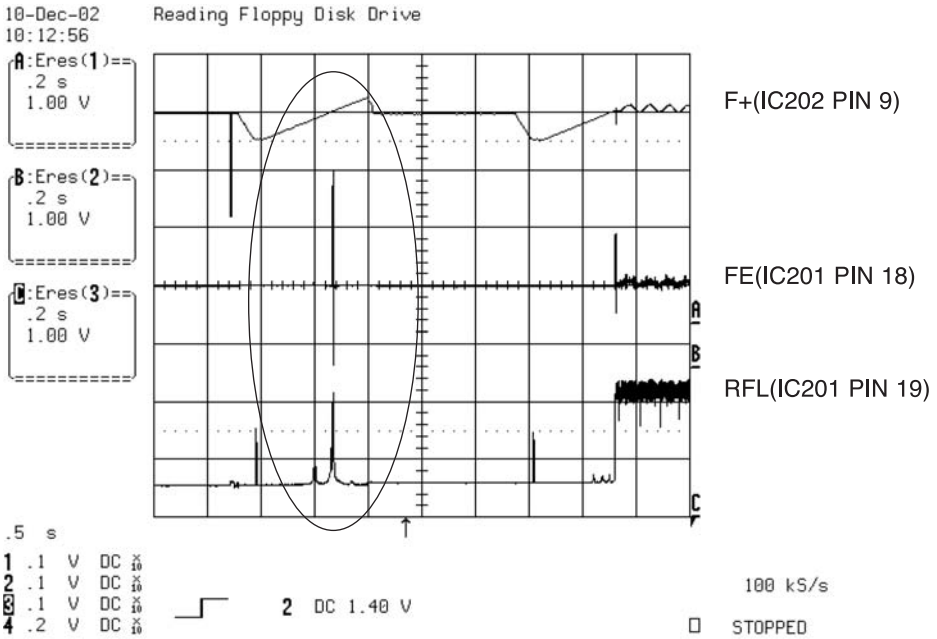

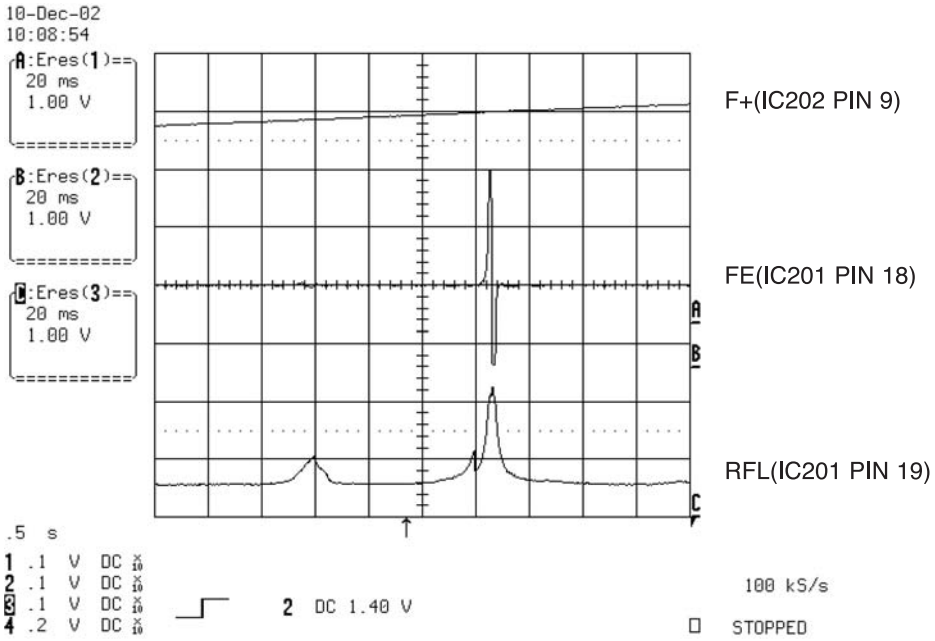
10-Dec-02
10:08:54
A:Eres(1)==
20 ms
1.00 V
B:Eres(2)==
20 ms
1.00 V
C:Eres(3)==
20 ms
1.00 V
F+(IC202 PIN 9)
FE(IC201 PIN 18)
RFL(IC201 PIN 19)
.5 s
1 .1 V DC
2 .1 V DC
3 .1 V DC
4 .2 V DC
2 DC 1.40 V
100 kS/s
STOPPED

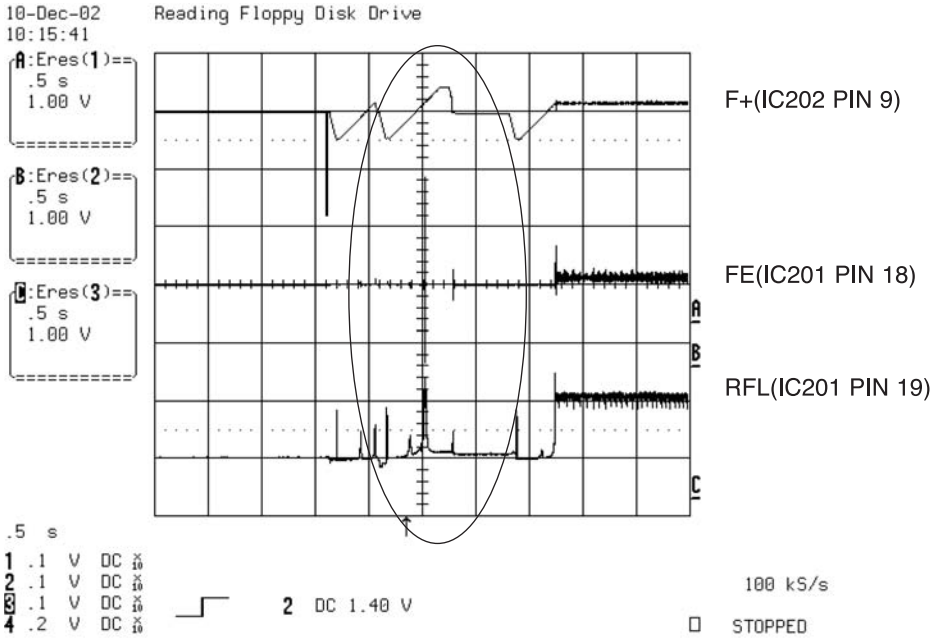
10-Dec-02
10:15:41
Reading Floppy Disk Drive
A:Eres(1)==
.5 s
1.00 V
B:Eres(2)==
.5 s
1.00 V
C:Eres(3)==
.5 s
1.00 V
F+(IC202 PIN 9)
FE(IC201 PIN 18)
RFL(IC201 PIN 19)
.5 s
1 .1 V DC
2 .1 V DC
3 .1 V DC
4 .2 V DC
2 DC 1.40 V
100 kS/s
STOPPED

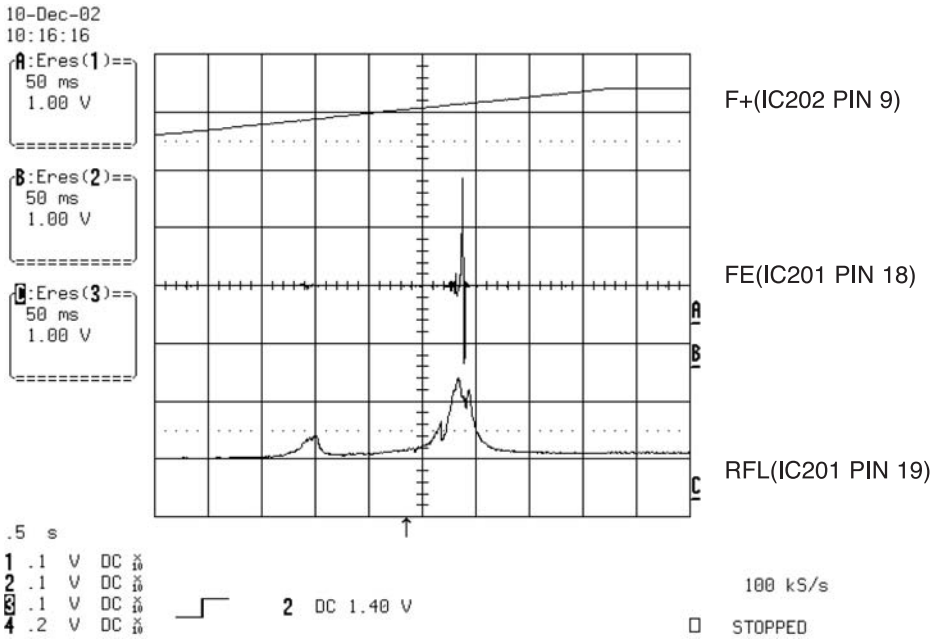

8. FOCUS ON WAVEFORM

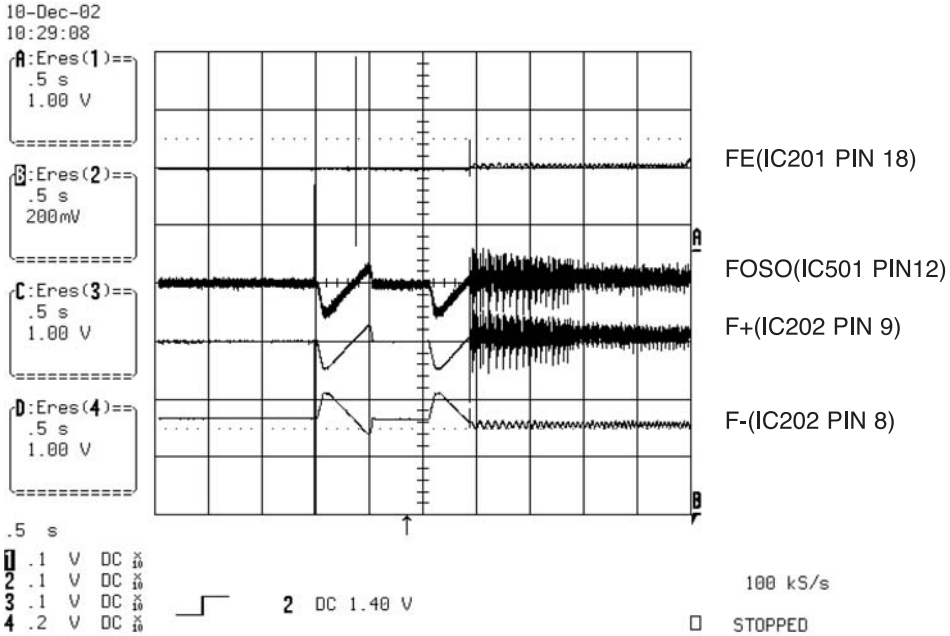

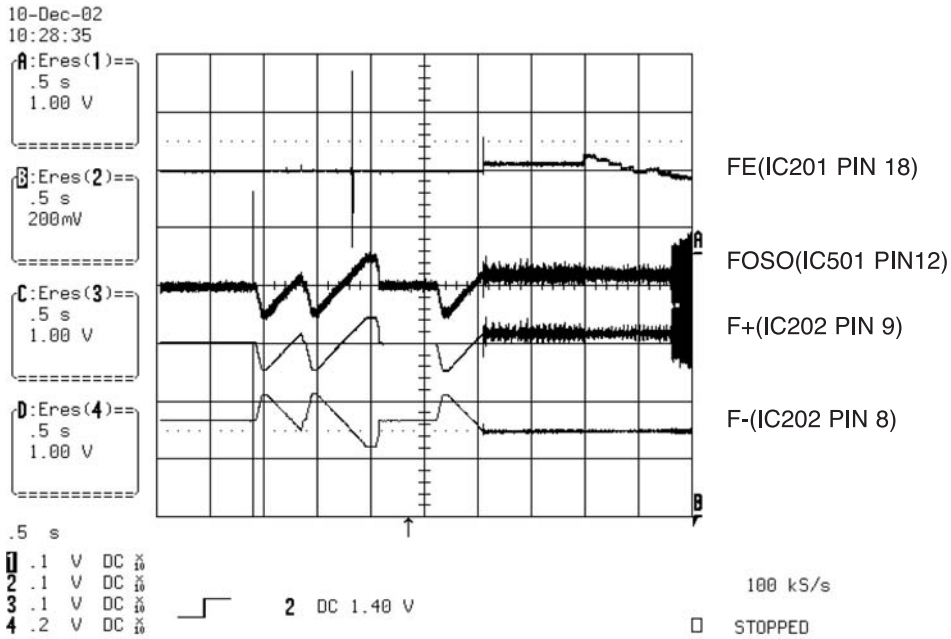

9. SPINDLE CONTROL WAVEFORM (NO DISC CONDITION)

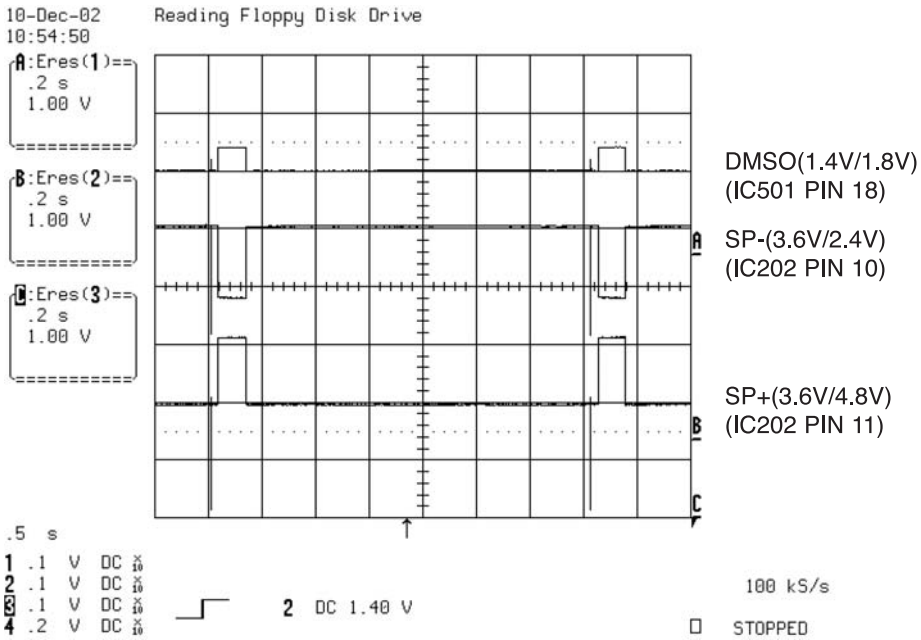

10. TRACKING CONTROL RELATED SIGNAL (SYSTEM CHECKING)

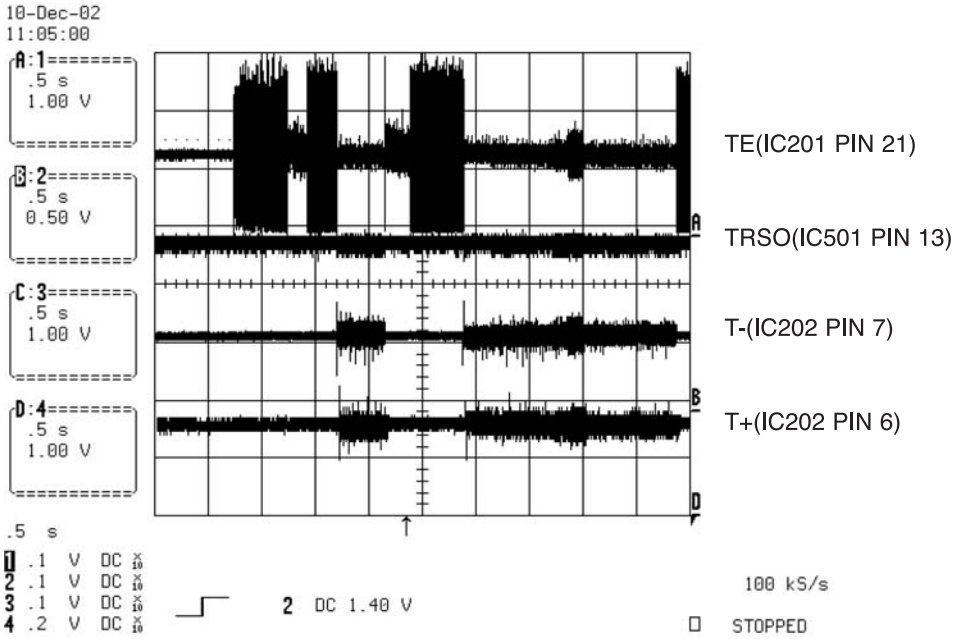

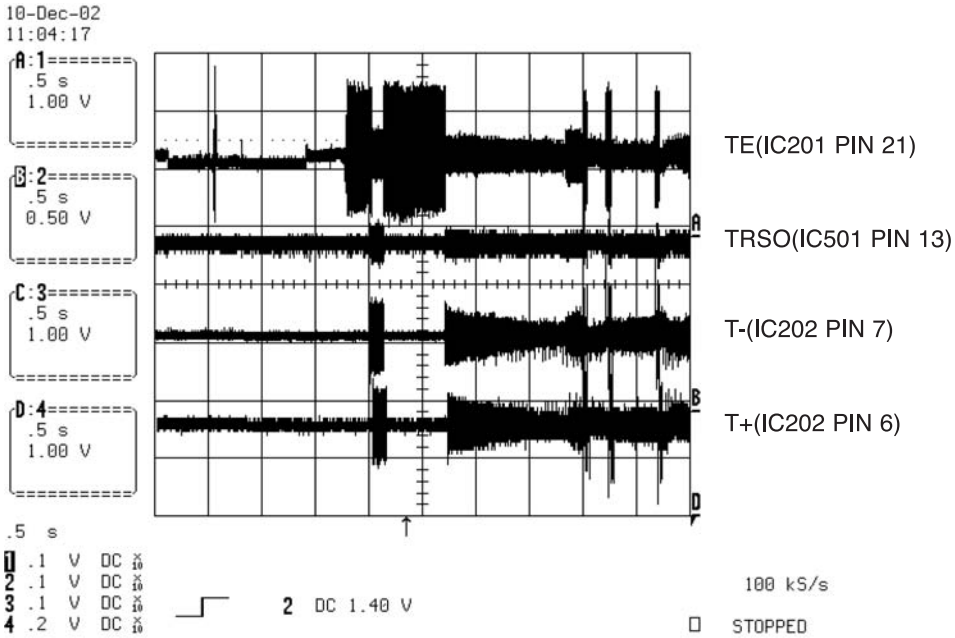

11. RF WAVEFORM

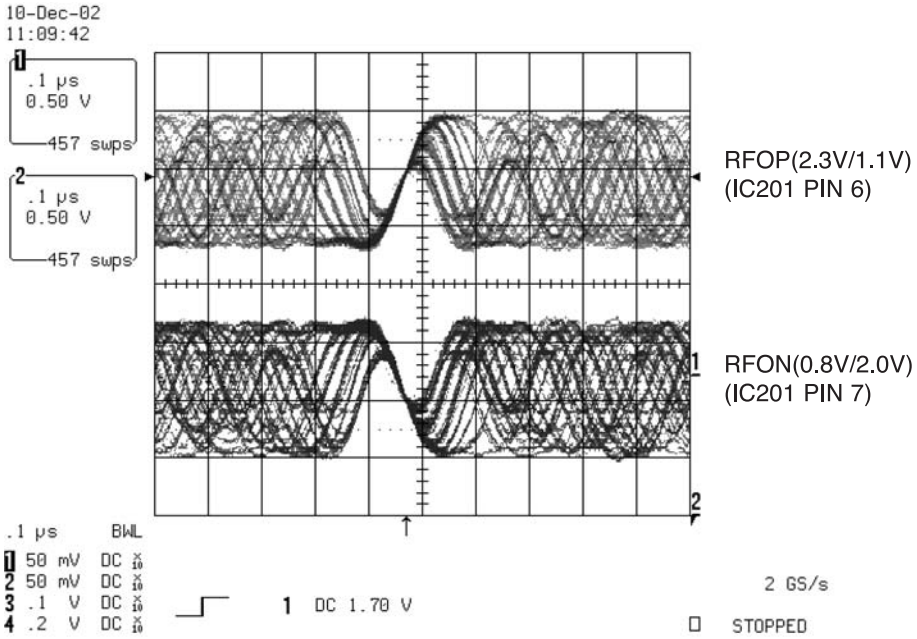

12. MT1379 AUDIO OPTICAL AND COAXIAL OUTPUT (ASPDIF)

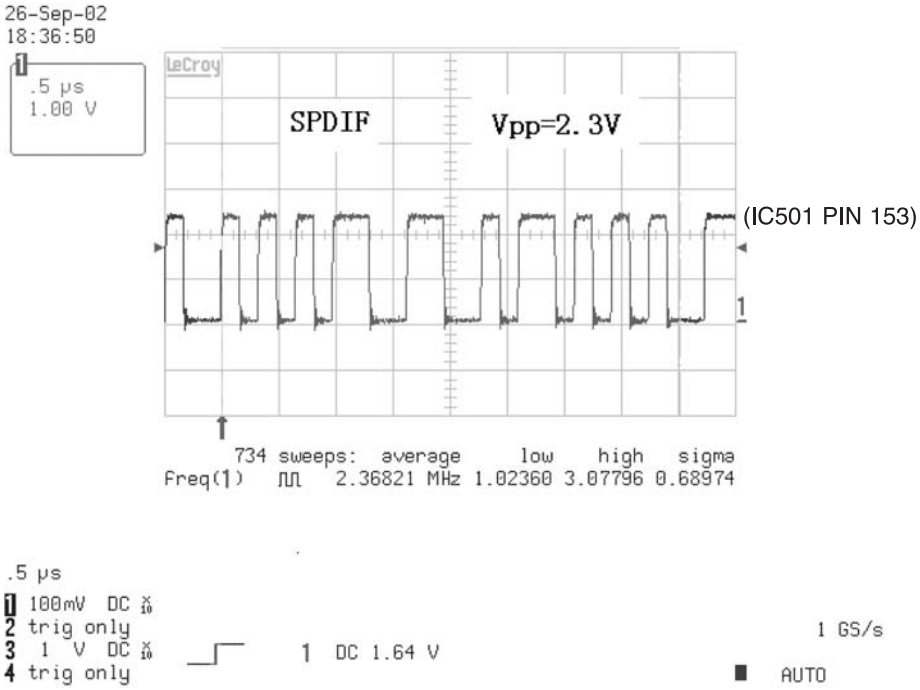

13. MT1379 VIDEO OUTPUT WAVEFORM
1) Full colorbar signal (CVBS)

DCLK = 93MHz, Vp-p=2.2, Vmax=2.7V

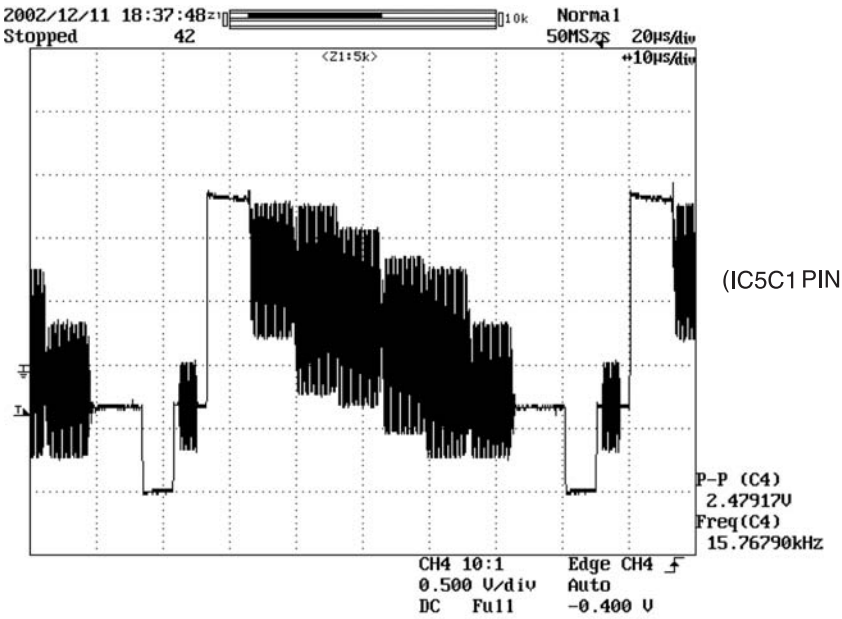

2) Y

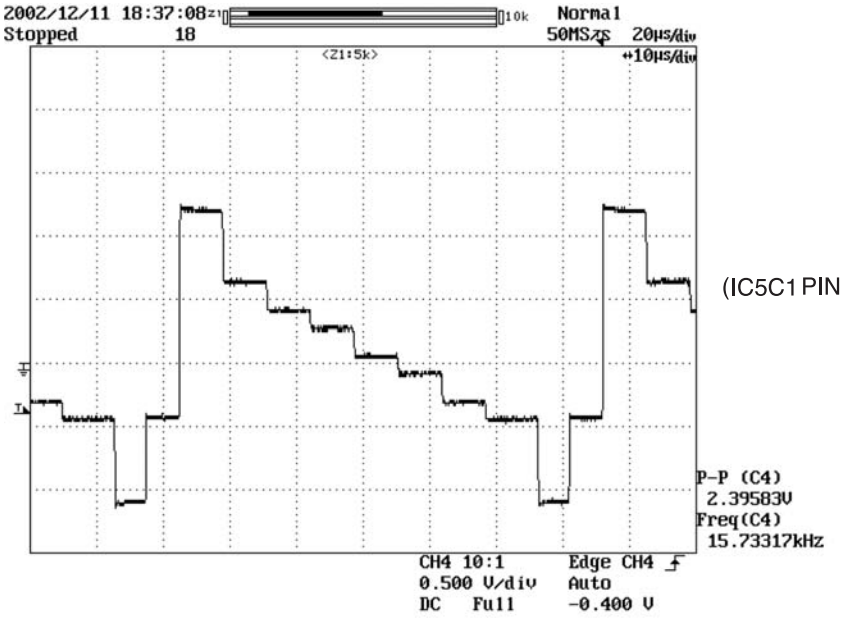

3) C

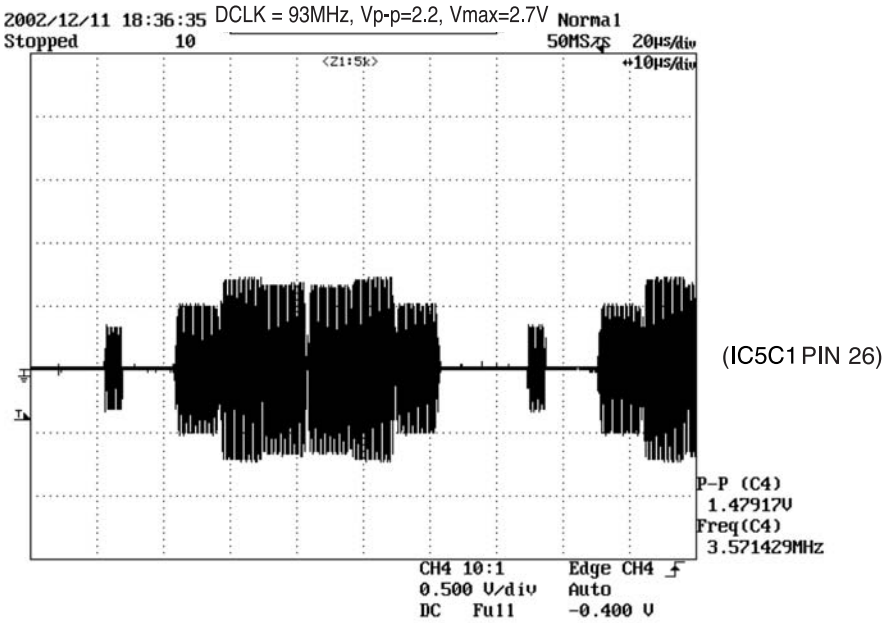

(IC5C1 PIN 26)

14. AUDIO OUTPUT FORM AUDIO DAC
1) Audio related Signal

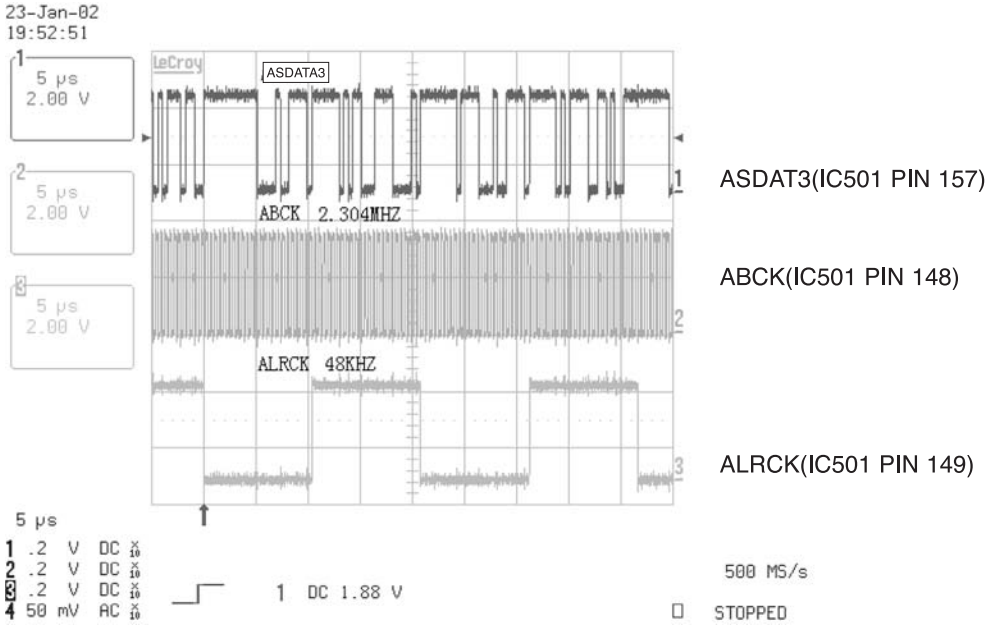

ASDAT3(IC501 PIN 157)

ABCK(IC501 PIN 148)

ALRCK(IC501 PIN 149)

DVD Processor Reset Procedure:

1. Press the [DVD SETUP] key on the remote commander to enter the set up screen. The following SET UP menu is displayed.

2. Move the cursor to [TV Aspect,16:9 Wide] on the screen.

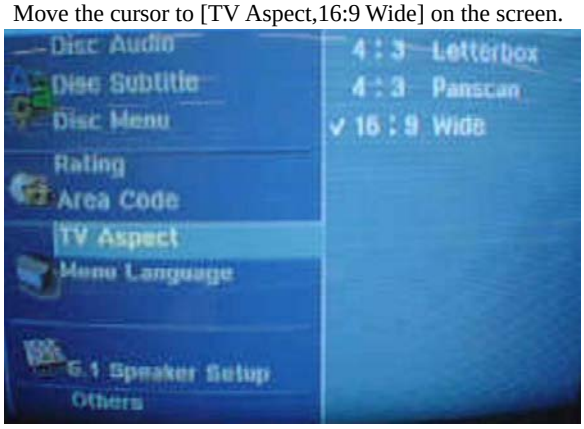

3. Press the following keys in the order of [1] → [3] → [9] → [7] → [1] → [3] → [9] → [ENTER] on the remote commander.

4. The following menu is displayed and the DVD Processor is reset to the default set up when the product is shipped from the factory.

5. Press any key on the remote commander to exit this mode. The DVD Processor reset procedure is completed.

SECTION 5
ELECTRICAL ADJUSTMENT

[RFMON Level Check]
Connection:

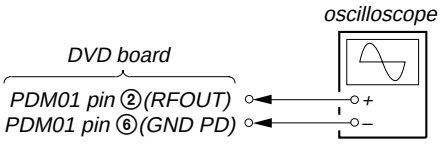

Procedure:

1. Connect an oscilloscope to PDM01 pin ② (RFOUT) and PDM01 pin ⑥ (GND PD) on the DVD board.
2. Turn the power on.
3. Set the test disc (DVD: TDV-520CSO, CD: LUV-P01) on the tray and touch the ▶ button to playback.
4. Confirm that oscilloscope waveform is clear and check RFOUT signal level is correct or not.

Note: A clear RFOUT signal waveform means that the shape "◊" can be clearly distinguished at the center of the waveform.

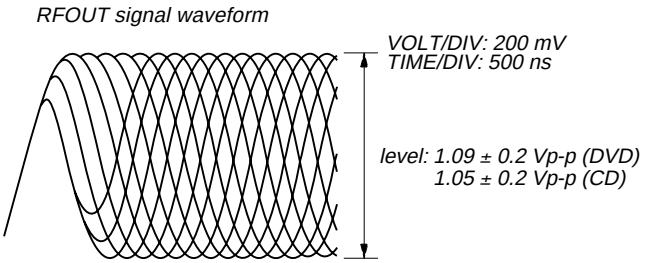

Checking Location: DVD board (COMPONENT SIDE)

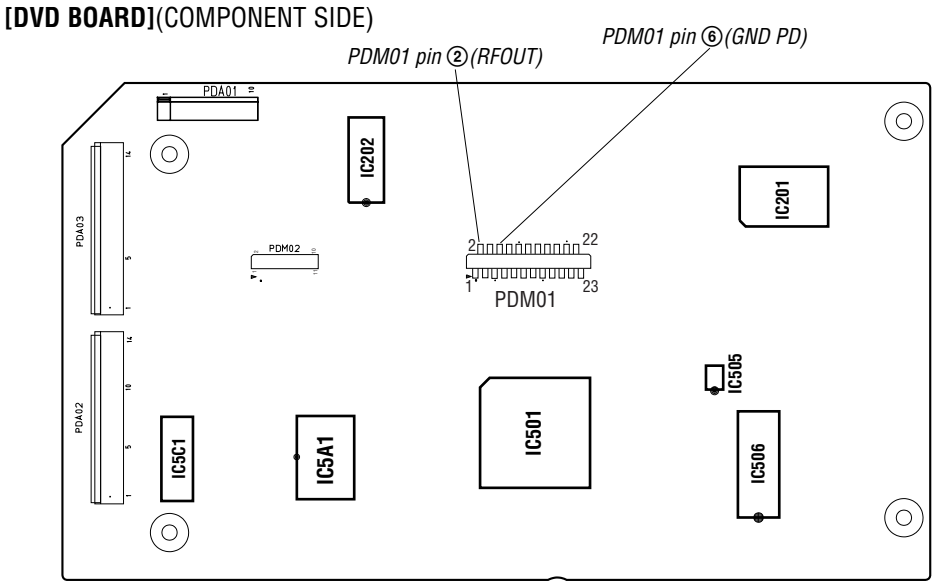

MEMO

SECTION 6
DIAGRAMS

6-1. BLOCK DIAGRAM — DVD SECTION —

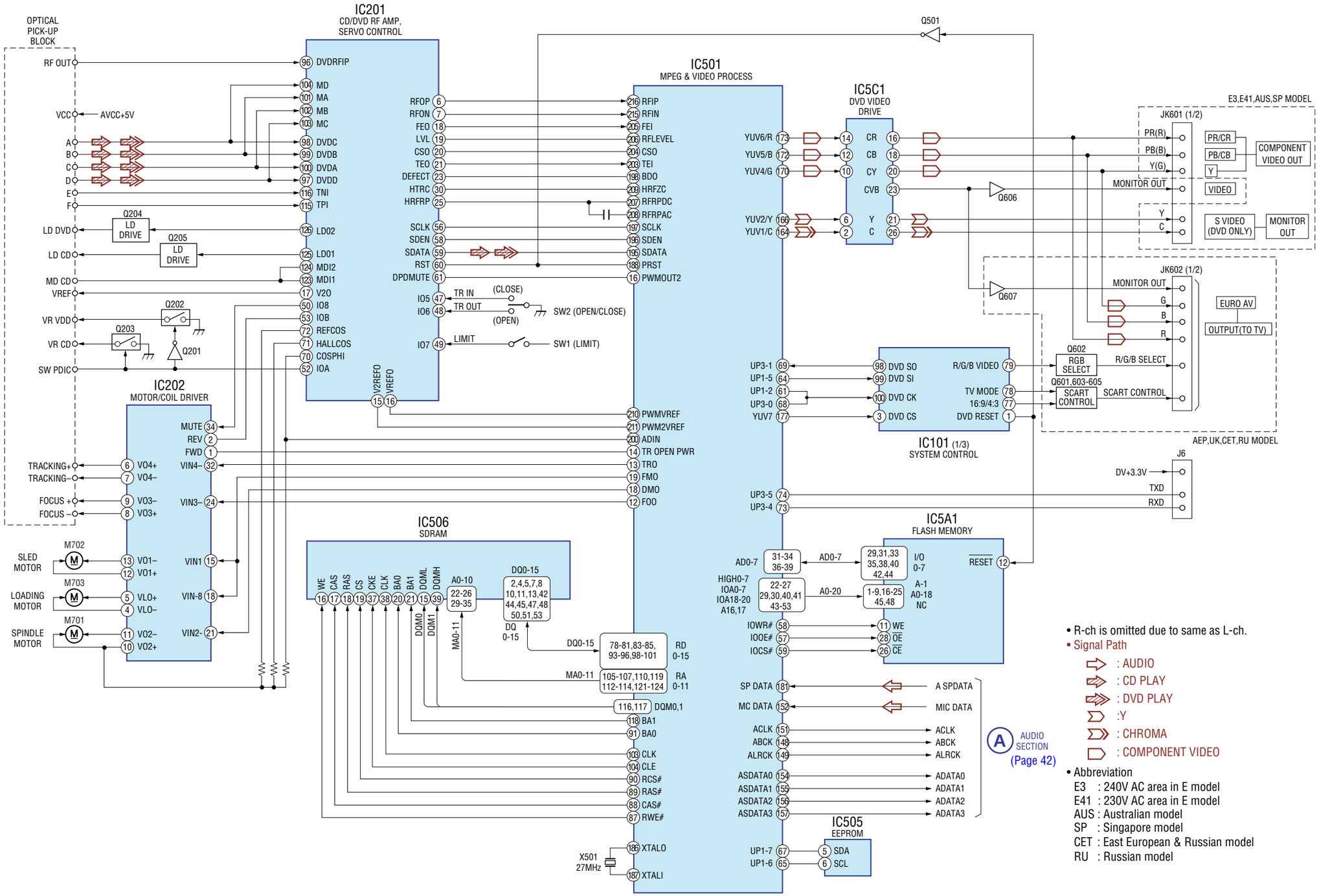

- R-ch is omitted due to same as L-ch.
- Signal Path
  - : AUDIO
  - : CD PLAY
  - : DVD PLAY
  - :Y
  - : CHROMA
  - : COMPONENT VIDEO
- Abbreviation
  - E3 : 240V AC area in E model
  - E41 : 230V AC area in E model
  - AUS : Australian model
  - SP : Singapore model
  - CET : East European & Russian model
  - RU : Russian model

6-2. BLOCK DIAGRAM — AUDIO SECTION —

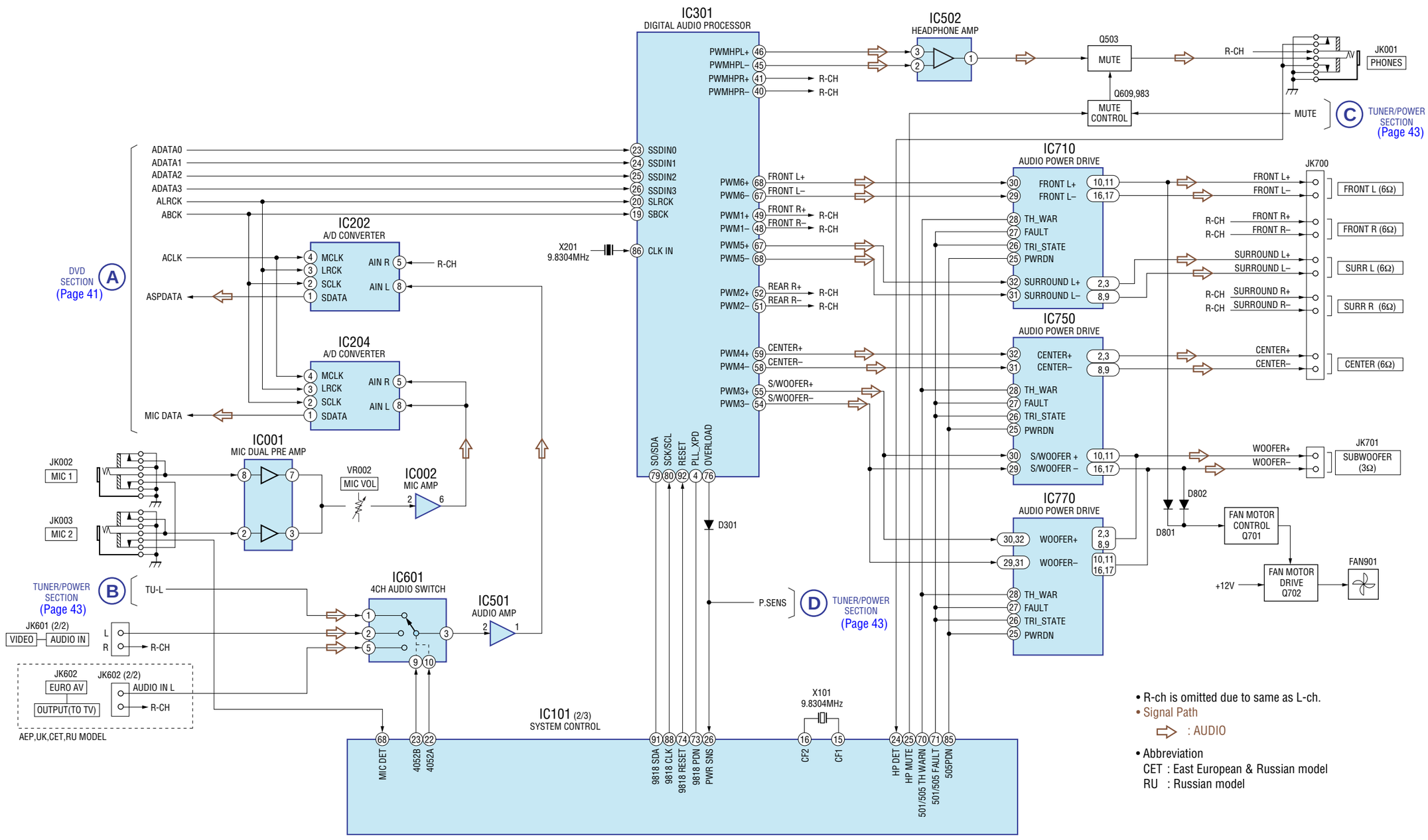

6-3. BLOCK DIAGRAM — TUNER/POWER SECTION —

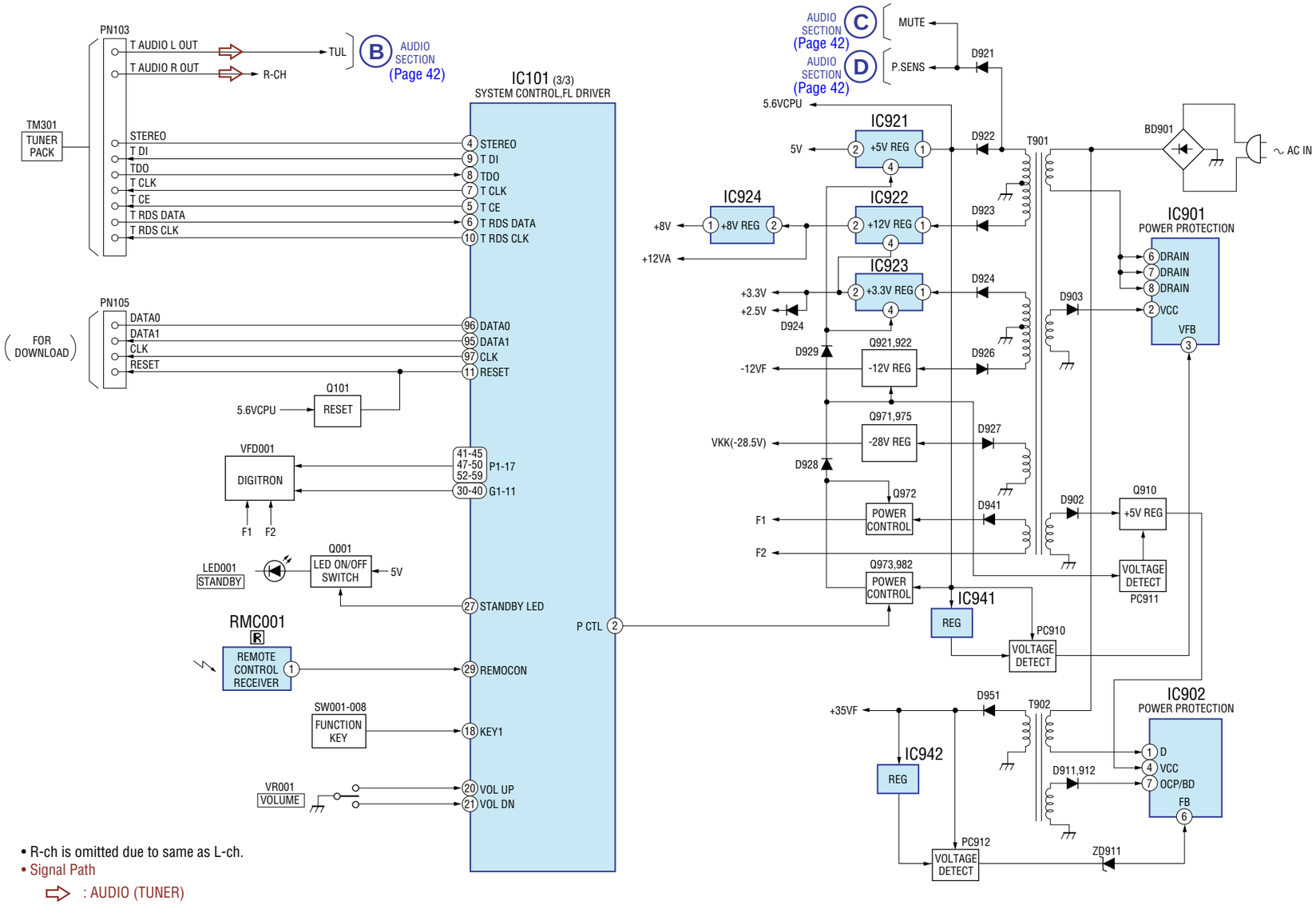

- R-ch is omitted due to same as L-ch.
- Signal Path
  ⇨ : AUDIO (TUNER)

• Circuit Boards Location

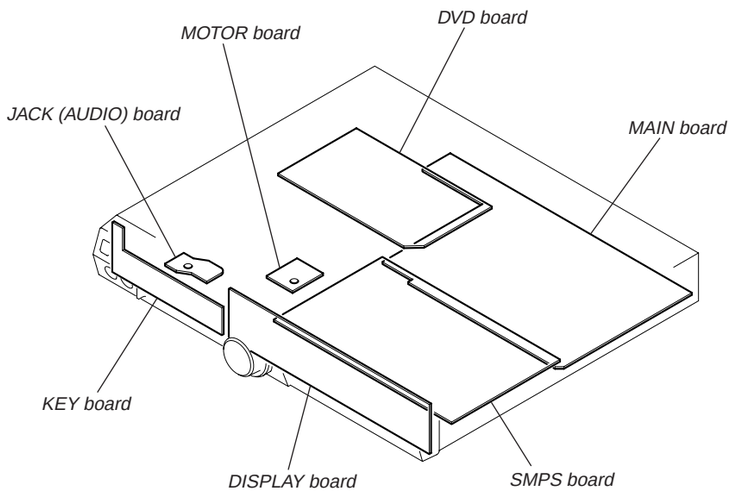

THIS NOTE IS COMMON FOR PRINTED WIRING BOARDS AND SCHEMATIC DIAGRAMS.
(In addition to this, the necessary note is printed in each block.)

for schematic diagram:

- All capacitors are in µF unless otherwise noted. (p: pF) 50 WV or less are not indicated except for electrolytics and tantalums.
- All resistors are in Ω and ¼ W or less unless otherwise specified.
- △ : internal component.
- : nonflammable resistor.
- : panel designation.

Note: The components identified by mark ⚠ or dotted line with mark ⚠ are critical for safety.
Replace only with part number specified.

- : B+ Line.
- : B– Line.
- : adjustment for repair.
- Voltage and waveforms are dc with respect to ground under no-signal (detuned) conditions.
  no mark : DVD PLAY
  ( ) : DVD STOP
- Voltages are taken with a VOM (Input impedance 10 MΩ). Voltage variations may be noted due to normal production tolerances.
- Waveforms are taken with a oscilloscope. Voltage variations may be noted due to normal production tolerances.
- Circled numbers refer to waveforms.
- Signal path.
  : Y
  : CHROMA
  : COMPONENT VIDEO
  : AUDIO
  : CD
  : DVD
- Abbreviation
  CET : East European & Russian model
  E3 : 240V AC area in E model
  E41 : 230V AC area in E model
  AUS : Australian model
  SP : Singapore model
  RU : Russian model

for printed wiring boards:

- : parts extracted from the component side.
- ■ : parts mounted on the conductor side.
- △ : internal component.
- : Pattern from the side which enables seeing.

Caution:
Pattern face side: (Side B) Parts on the pattern face side seen from the pattern face are indicated.
Parts face side: (Side A) Parts on the parts face side seen from the parts face are indicated.

- Abbreviation
  CET : East European & Russian model
  E3 : 240V AC area in E model
  E41 : 230V AC area in E model
  AUS : Australian model
  SP : Singapore model
  RU : Russian model

• Waveforms

— DVD Board —

① **IC201 ⑱ (FEO)**

100mV/DIV, 1ms/DIV

② **IC201 ㉑ (TEO)**

500mV/DIV, 1ms/DIV

③ **IC201 ⑯ (DVDRFIP)**

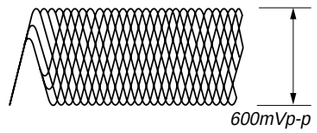

200mV/DIV, 100ns/DIV

④ **IC501 ⑯ (XTALO)**

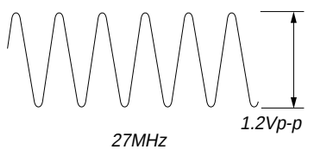

1V/DIV, 10ns/DIV

— MAIN Board —

① **IC101 ⑯ (CF2)**

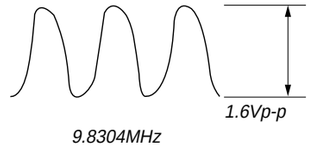

1V/DIV, 10ns/DIV

② **IC301 ⑯ (CLK IN)**

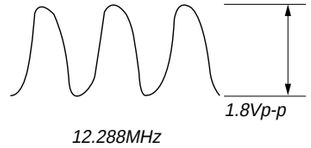

1V/DIV, 10ns/DIV

6-4. PRINTED WIRING BOARDS — DVD SECTION (1/2) — • Refer to page 44 for Circuit Boards Location. **: Uses unleaded solder.**

【DVD BOARD】(SIDE A)

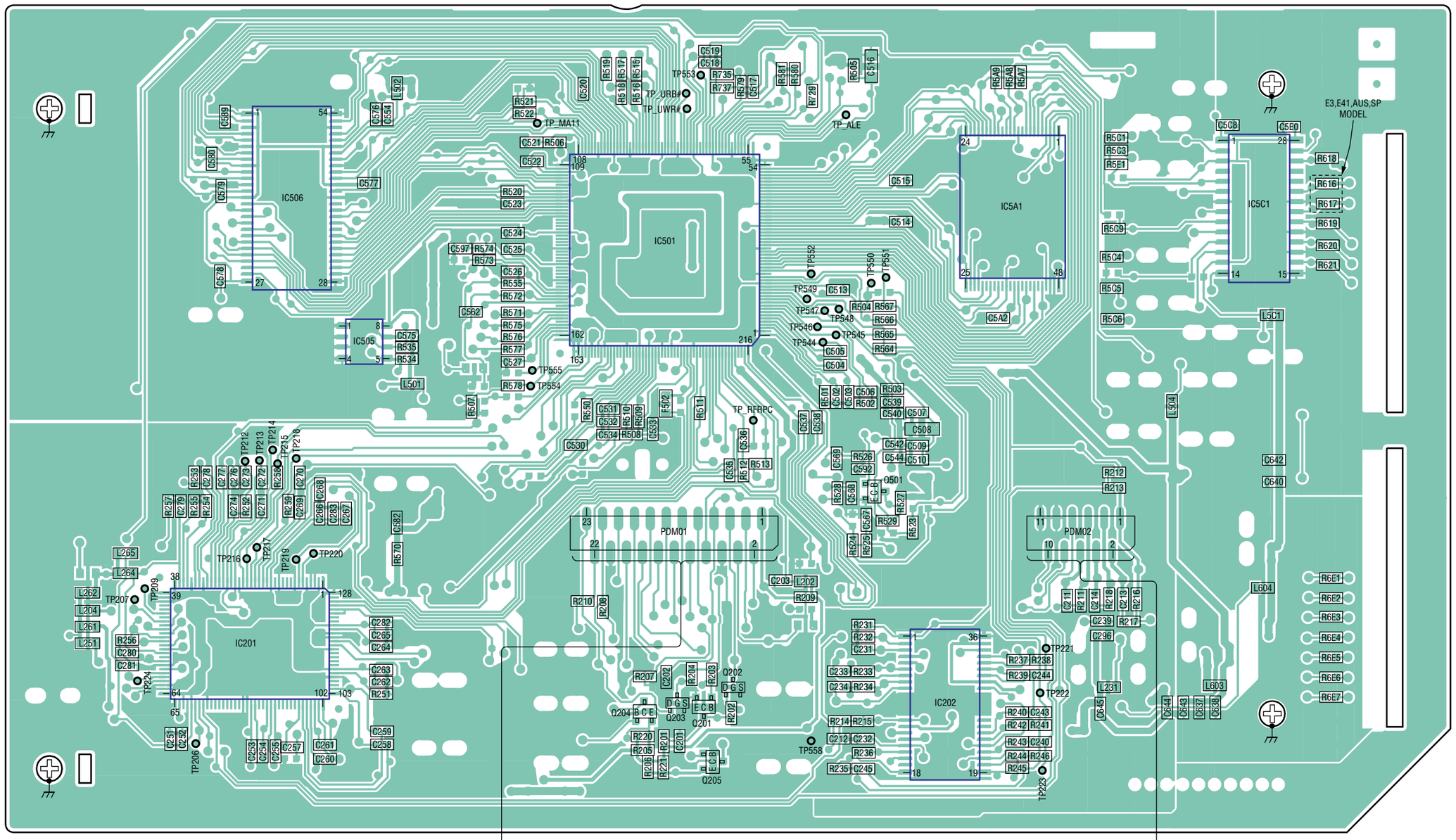

OPTICAL PICK-UP BLOCK (PVR-502W)

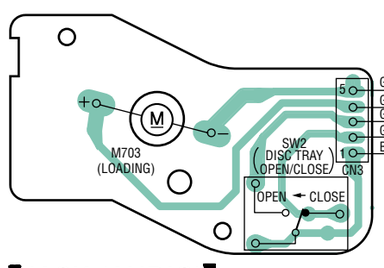

【JACK (AUDIO) BOARD】

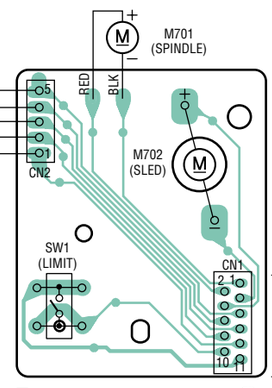

【MOTOR BOARD】

- **Semiconductor Location (Side A)**

Ref. No.	Location
IC201	G-12
IC202	G-6
IC501	C-8
IC505	D-11
IC506	C-11
IC5A1	C-5
IC5C1	C-3
Q201	G-8
Q202	G-8
Q203	G-8
Q204	G-8
Q205	G-8
Q501	E-6

6-5. PRINTED WIRING BOARD — DVD SECTION (2/2) — • Refer to page 44 for Circuit Boards Location. : Uses unleaded solder.

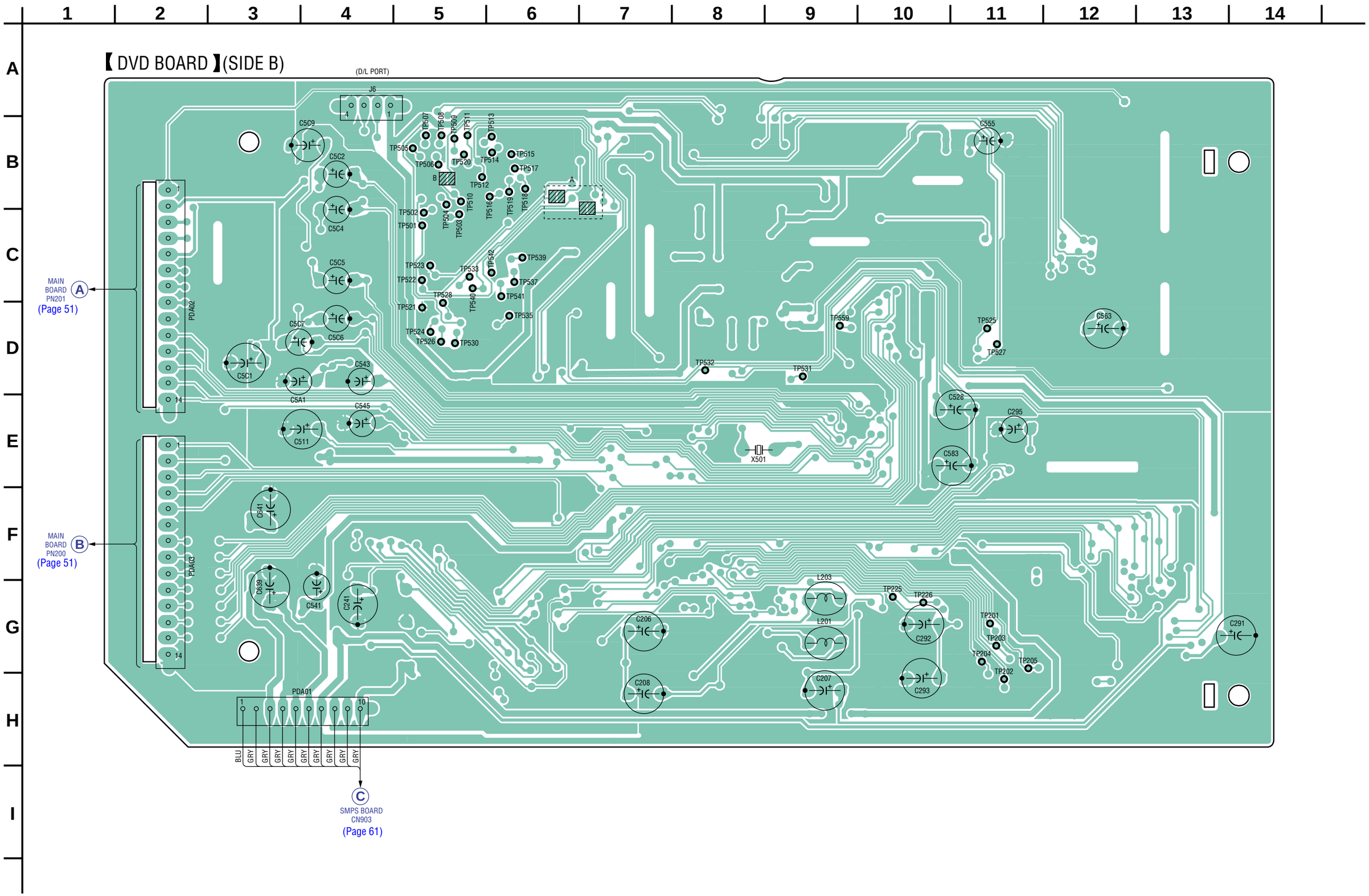

6-6. SCHEMATIC DIAGRAM — DVD SECTION (1/3) — • Refer to page 44 for Waveforms.

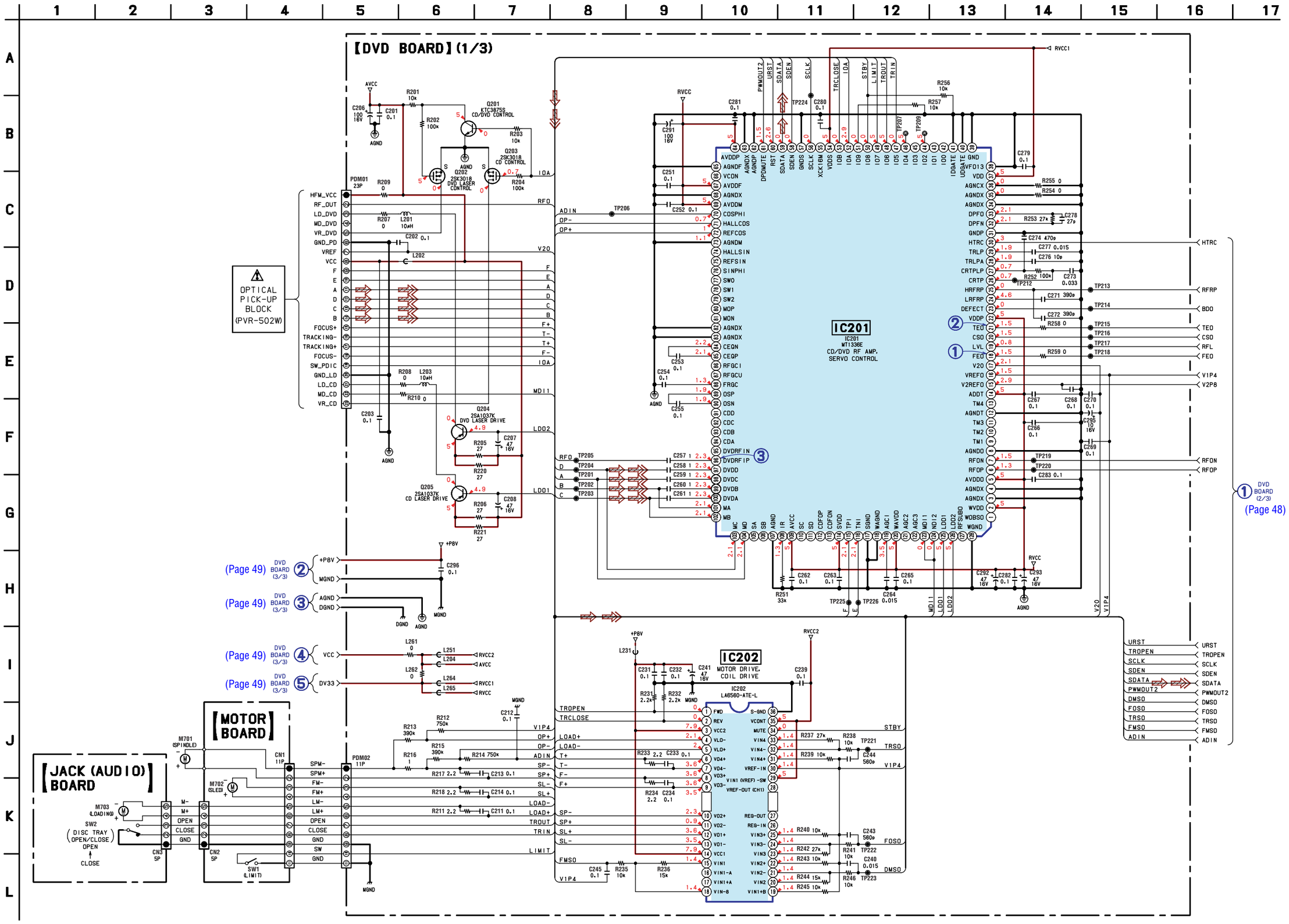

6-7. SCHEMATIC DIAGRAM — DVD SECTION (2/3) — • Refer to page 44 for Waveforms and page 63 for IC Block Diagrams.

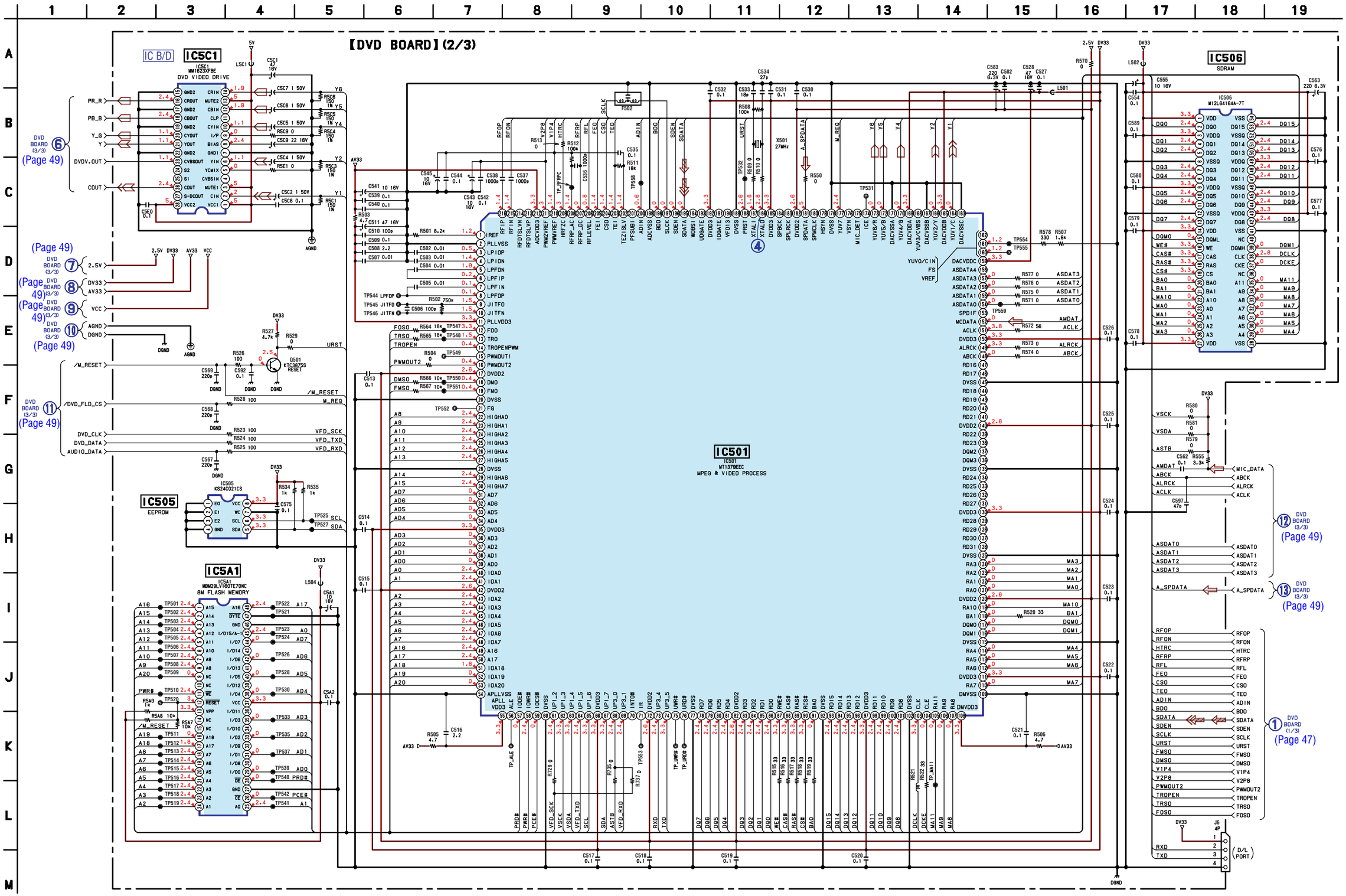

6-8. SCHEMATIC DIAGRAM — DVD SECTION (3/3) —

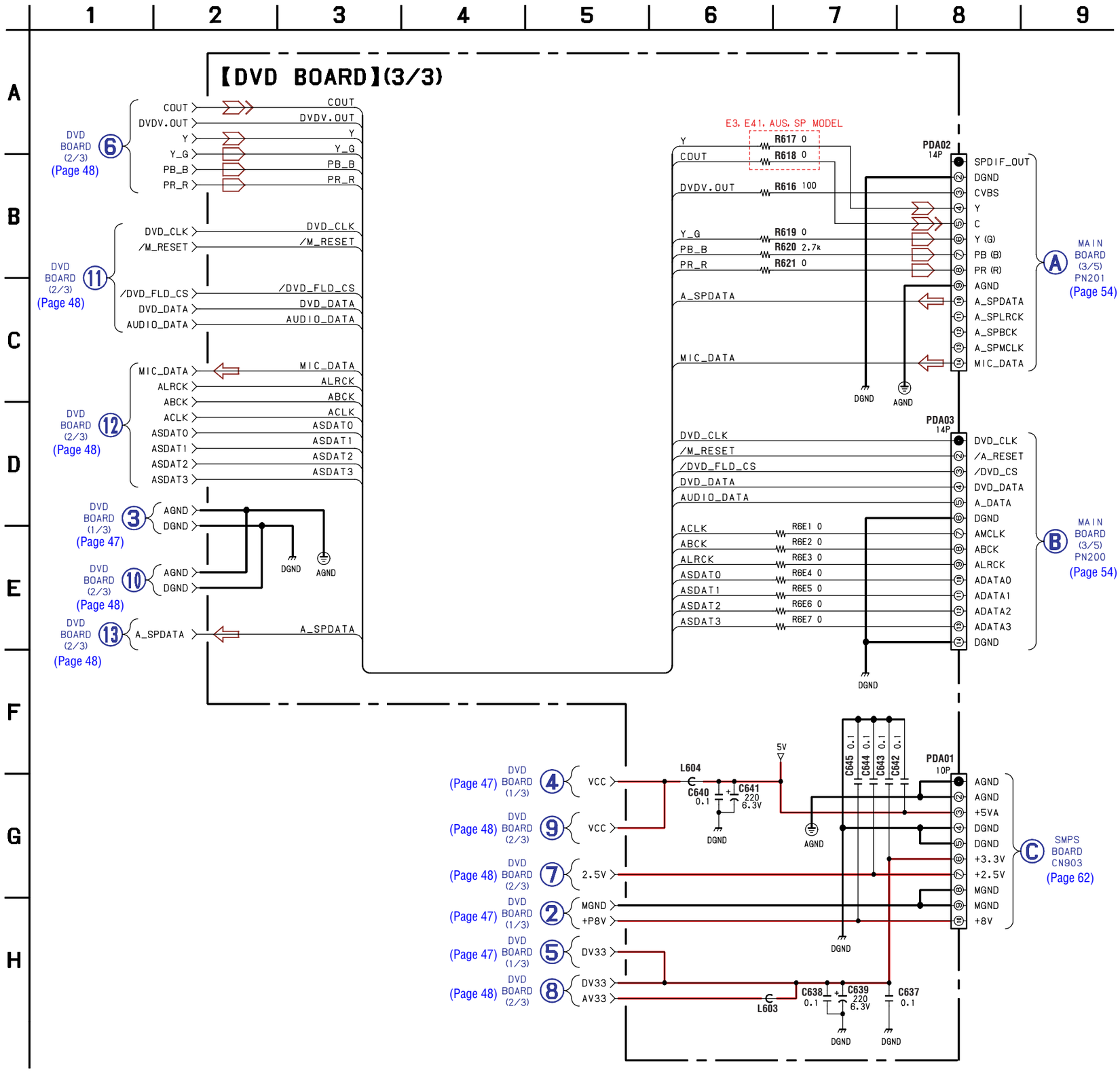

6-9. PRINTED WIRING BOARD — MAIN SECTION (1/2) — • Refer to page 44 for Circuit Boards Location. : Uses unleaded solder.

【MAIN BOARD】(SIDE A)

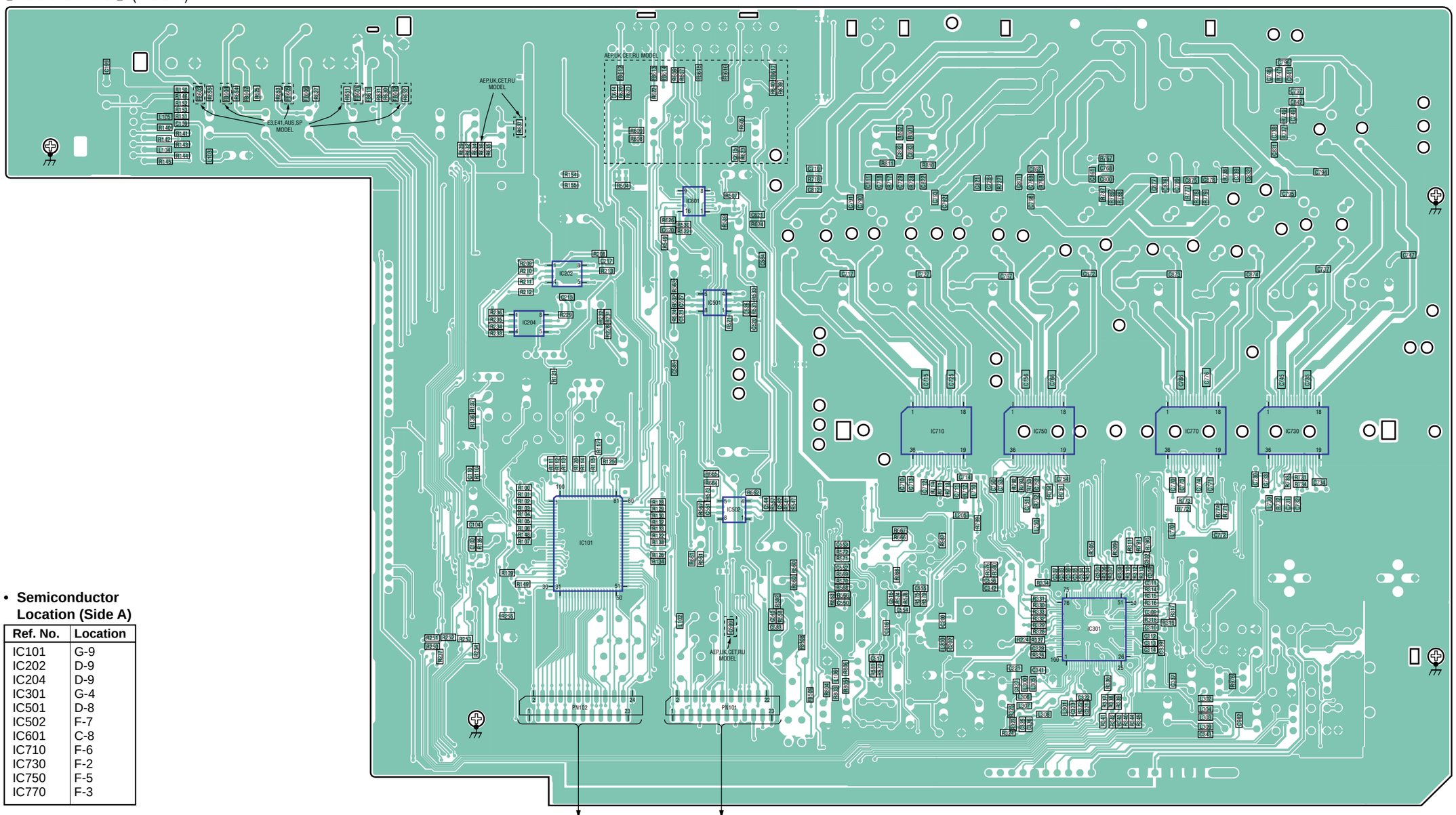

- **Semiconductor Location (Side A)**

Ref. No.	Location
IC101	G-9
IC202	D-9
IC204	D-9
IC301	G-4
IC501	D-8
IC502	F-7
IC601	C-8
IC710	F-6
IC730	F-2
IC750	F-5
IC770	F-3

6-10. PRINTED WIRING BOARD — MAIN SECTION (2/2) — • Refer to page 44 for Circuit Boards Location. : Uses unleaded solder.

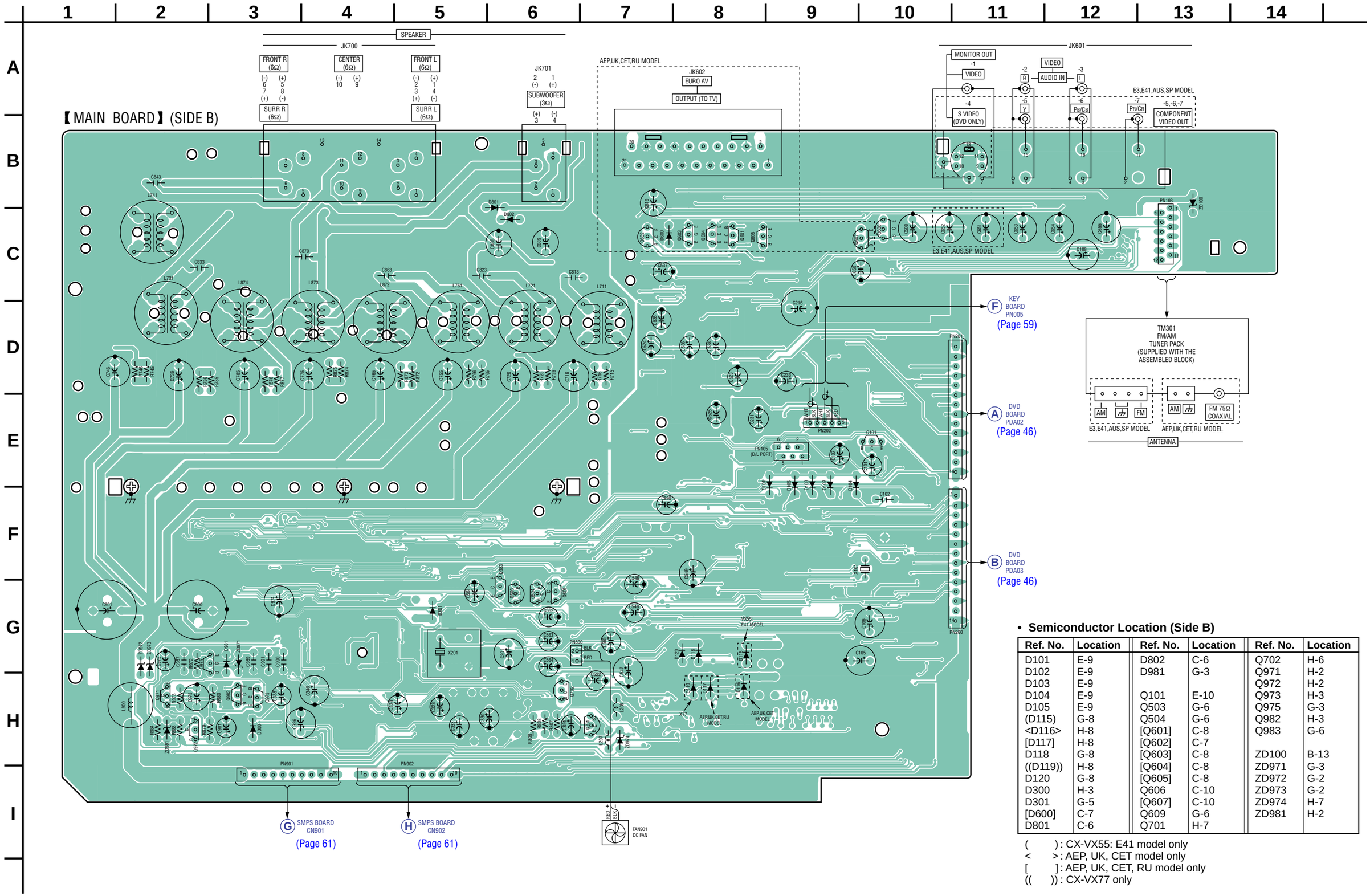

- **Semiconductor Location (Side B)**

Ref. No.	Location	Ref. No.	Location	Ref. No.	Location
D101	E-9	D802	C-6	Q702	H-6
D102	E-9	D981	G-3	Q971	H-2
D103	E-9			Q972	H-2
D104	E-9	Q101	E-10	Q973	H-3
D105	E-9	Q503	G-6	Q975	G-3
(D115)	G-8	Q504	G-6	Q982	H-3
<D116>	H-8	[Q601]	C-8	Q983	G-6
[D117]	H-8	[Q602]	C-7		
D118	G-8	[Q603]	C-8	ZD100	B-13
((D119))	H-8	[Q604]	C-8	ZD971	G-3
D120	G-8	[Q605]	C-8	ZD972	G-2
D300	H-3	Q606	C-10	ZD973	G-2
D301	G-5	[Q607]	C-10	ZD974	H-7
[D600]	C-7	Q609	G-6	ZD981	H-2
D801	C-6	Q701	H-7		

( ) : CX-VX55: E41 model only
< > : AEP, UK, CET model only
[ ] : AEP, UK, CET, RU model only
(( )) : CX-VX77 only

6-11. SCHEMATIC DIAGRAM — MAIN SECTION (1/5) — • Refer to page 44 for Waveforms.

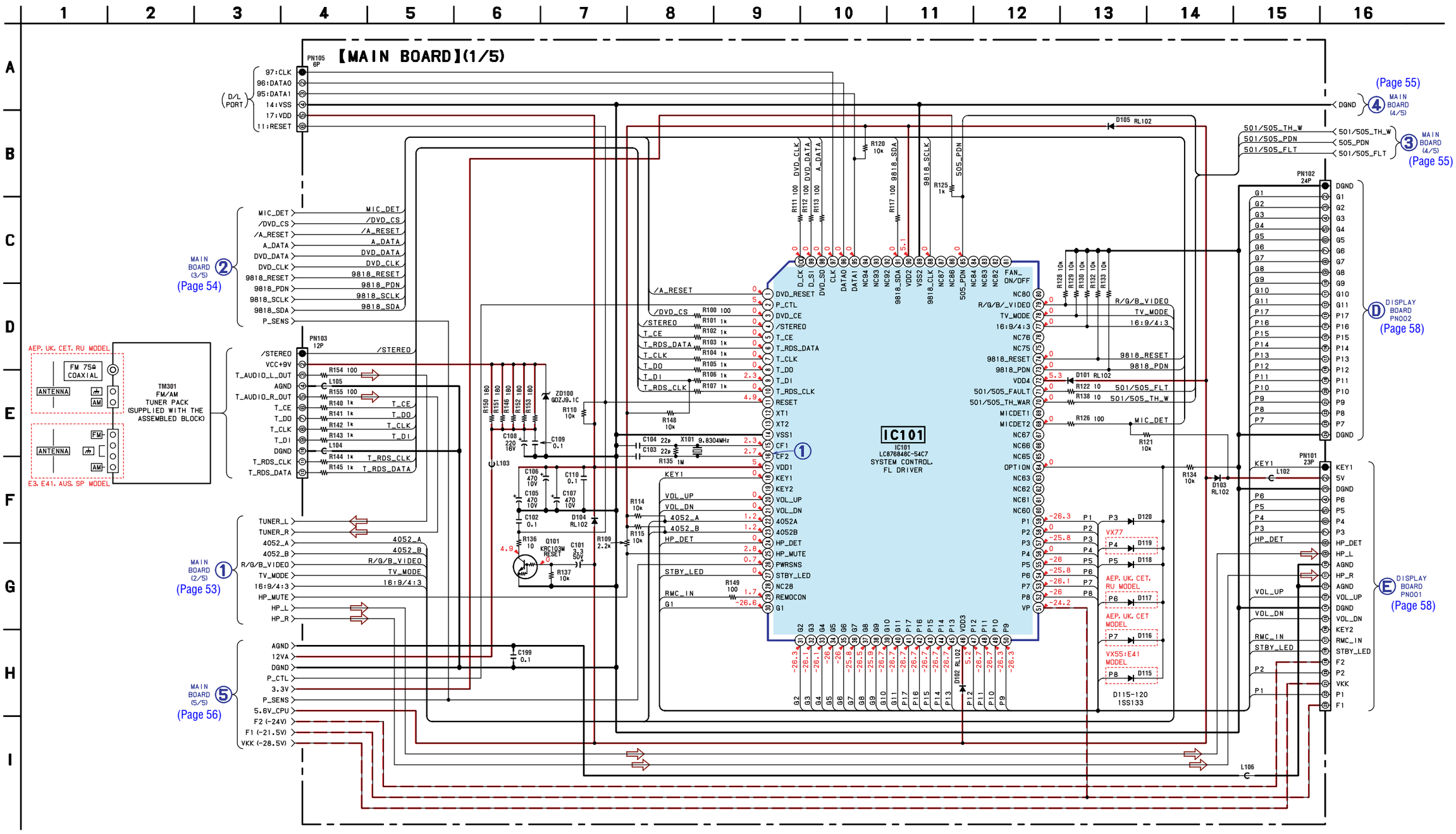

6-12. SCHEMATIC DIAGRAM — MAIN SECTION (2/5) — • Refer to page 63 for IC Block Diagrams.

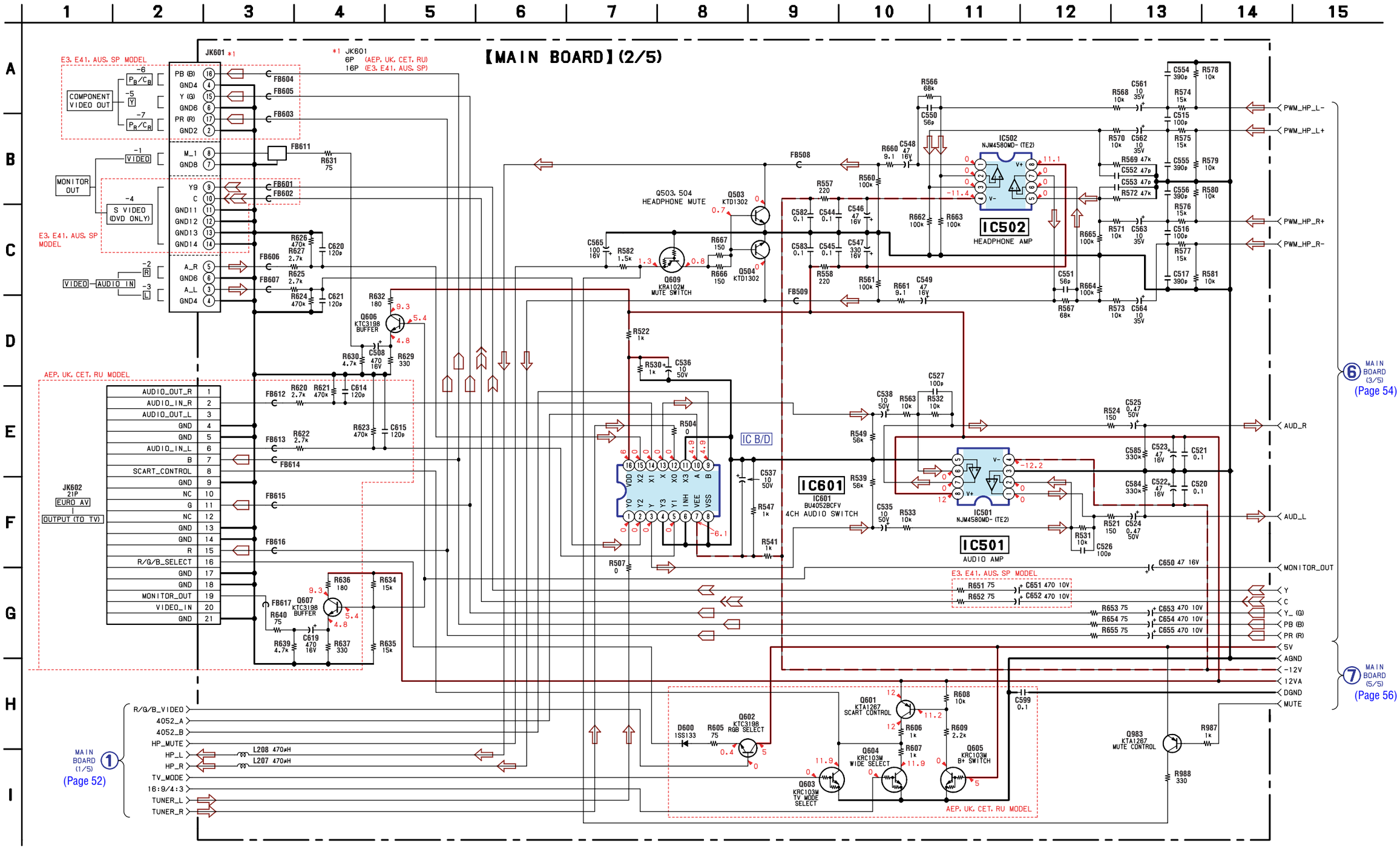

6-13. SCHEMATIC DIAGRAM — MAIN SECTION (3/5) — • Refer to page 44 for Waveforms and page 63 for IC Block Diagrams.

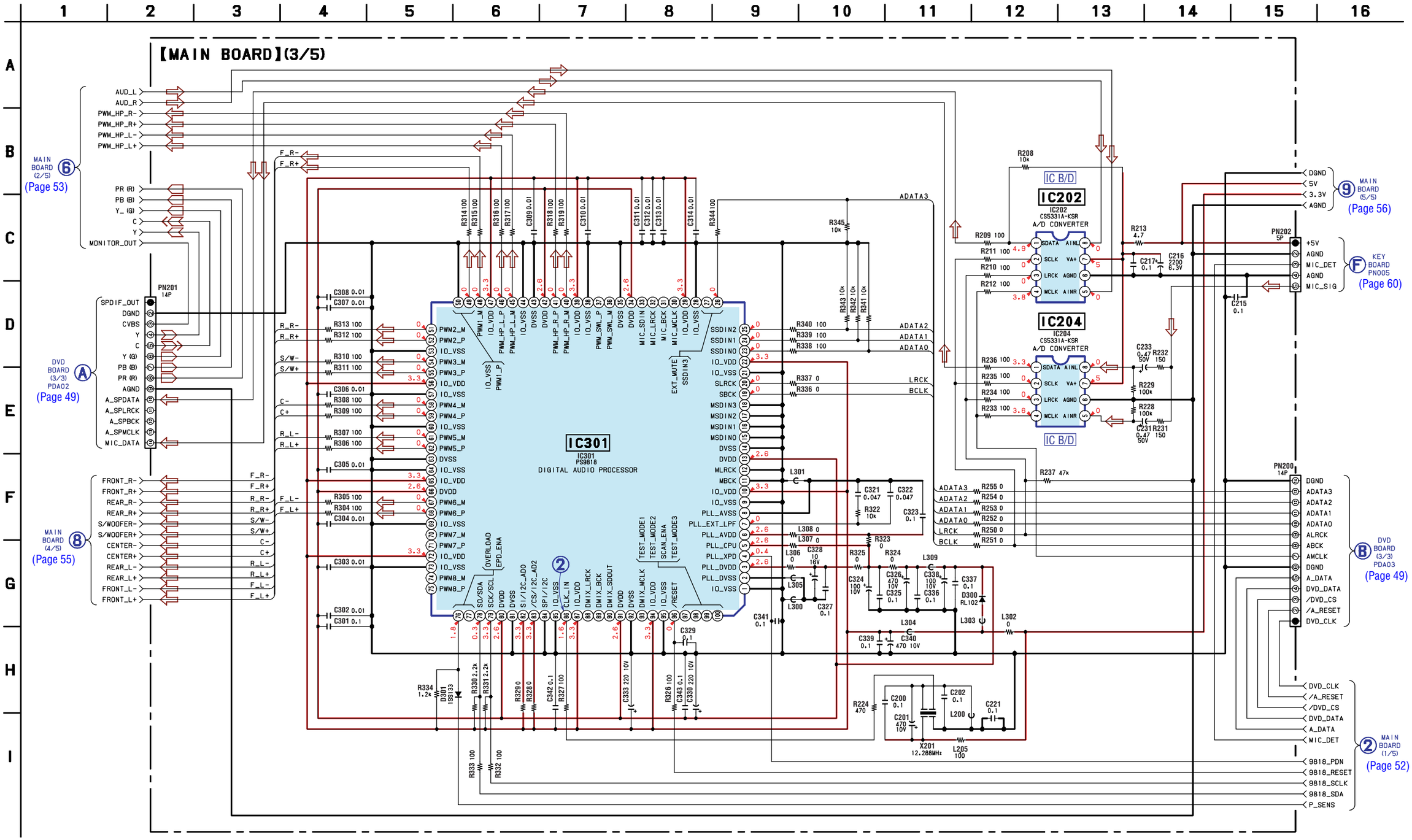

6-14. SCHEMATIC DIAGRAM — MAIN SECTION (4/5) — • Refer to page 64 for IC Block Diagrams.

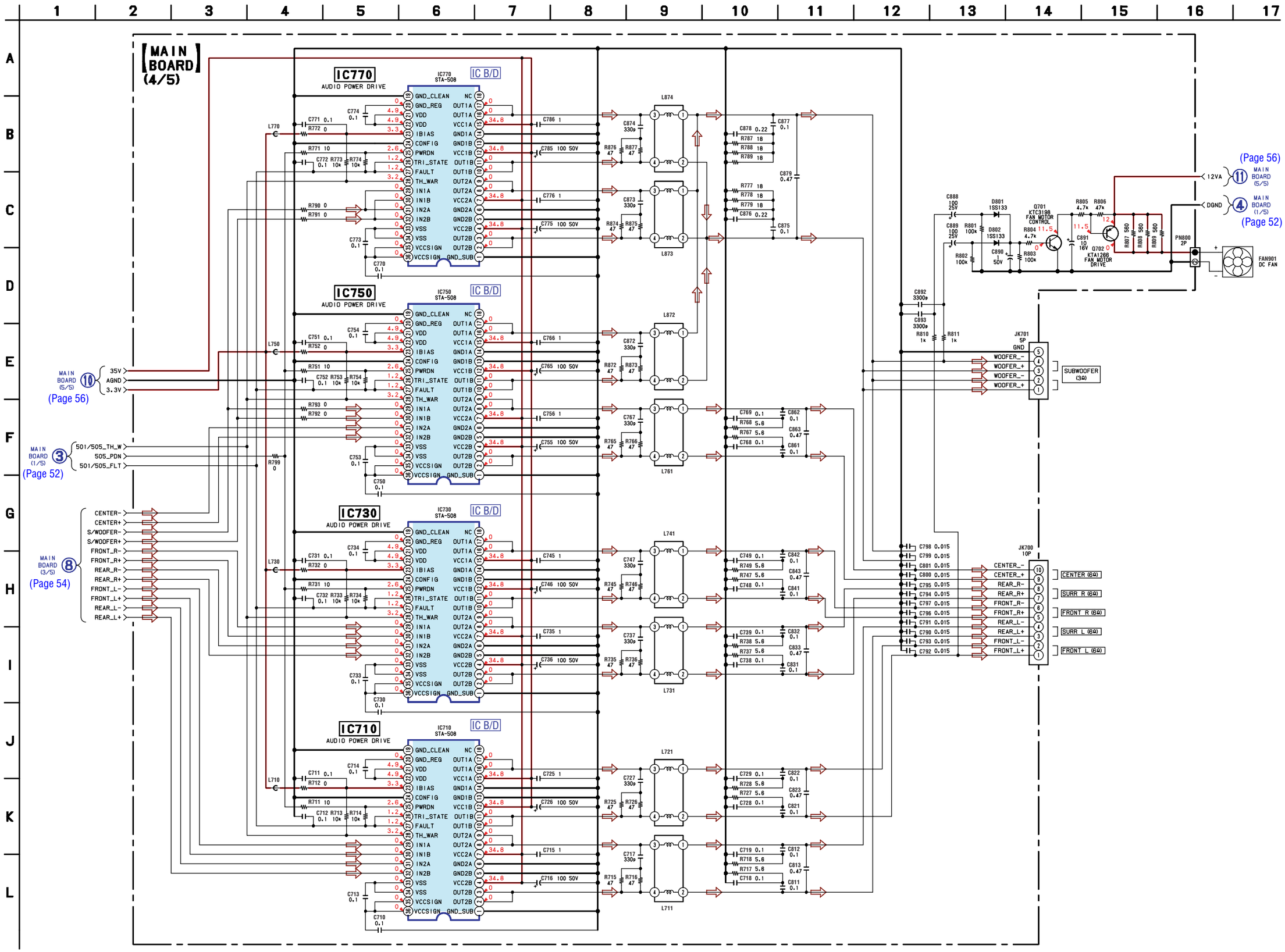

6-15. SCHEMATIC DIAGRAM — MAIN SECTION (5/5) —

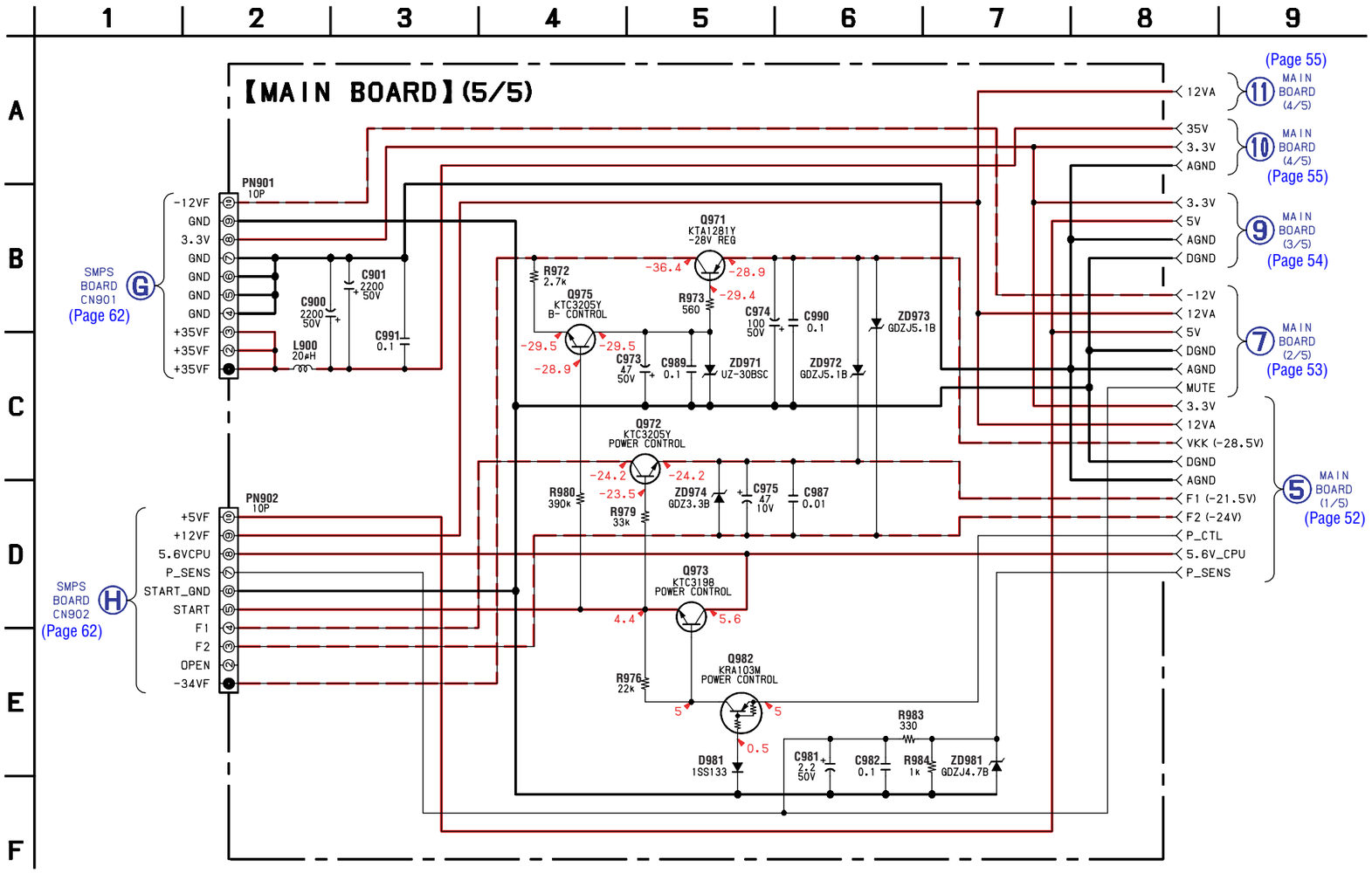

6-16. PRINTED WIRING BOARD — DISPLAY SECTION — • Refer to page 44 for Circuit Boards Location. : Uses unleaded solder.

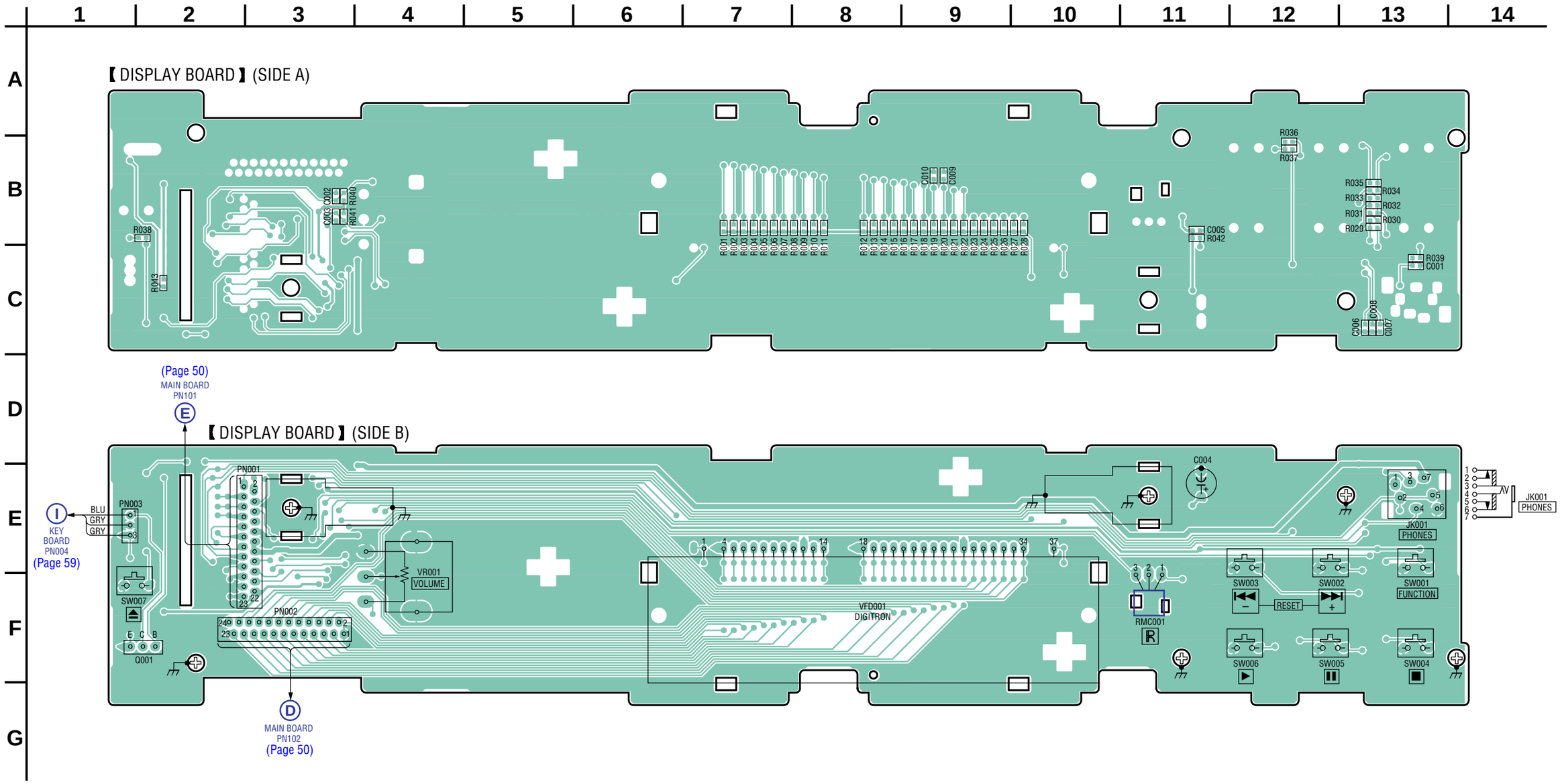

6-17. SCHEMATIC DIAGRAM — DISPLAY SECTION —

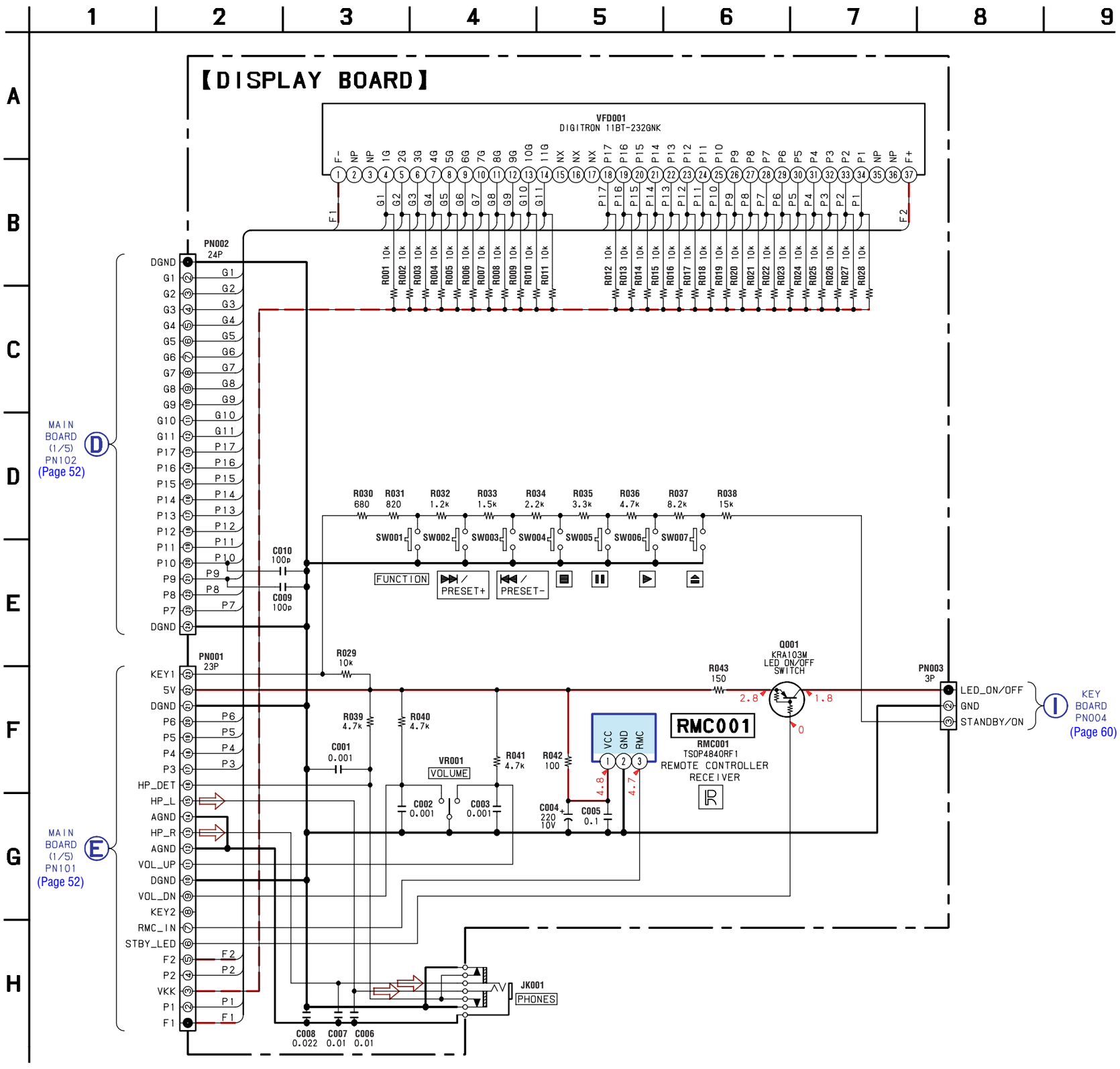

6-18. PRINTED WIRING BOARD — KEY SECTION — • Refer to page 44 for Circuit Boards Location. : Uses unleaded solder.

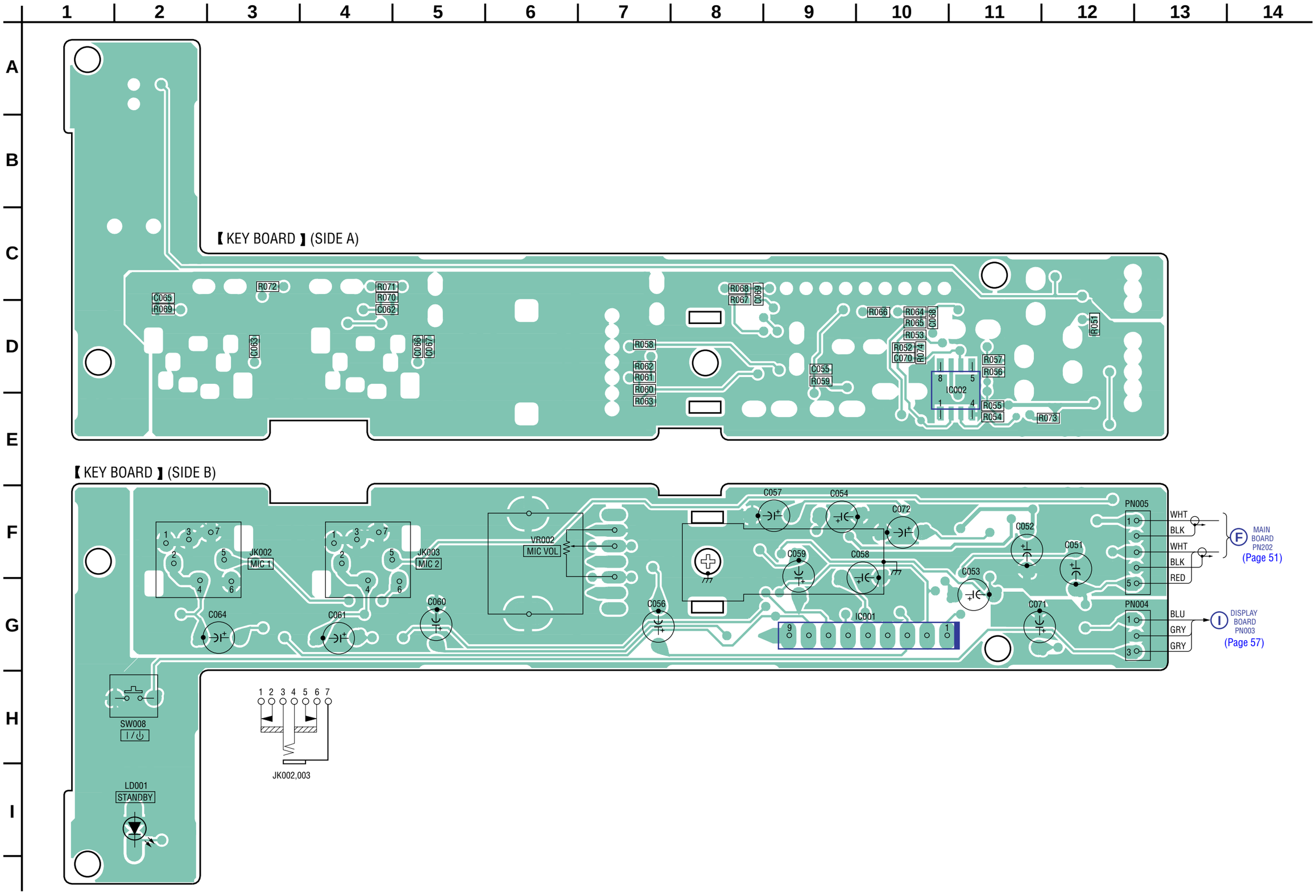

6-19. SCHEMATIC DIAGRAM — KEY SECTION — • Refer to page 64 for IC Block Diagrams.

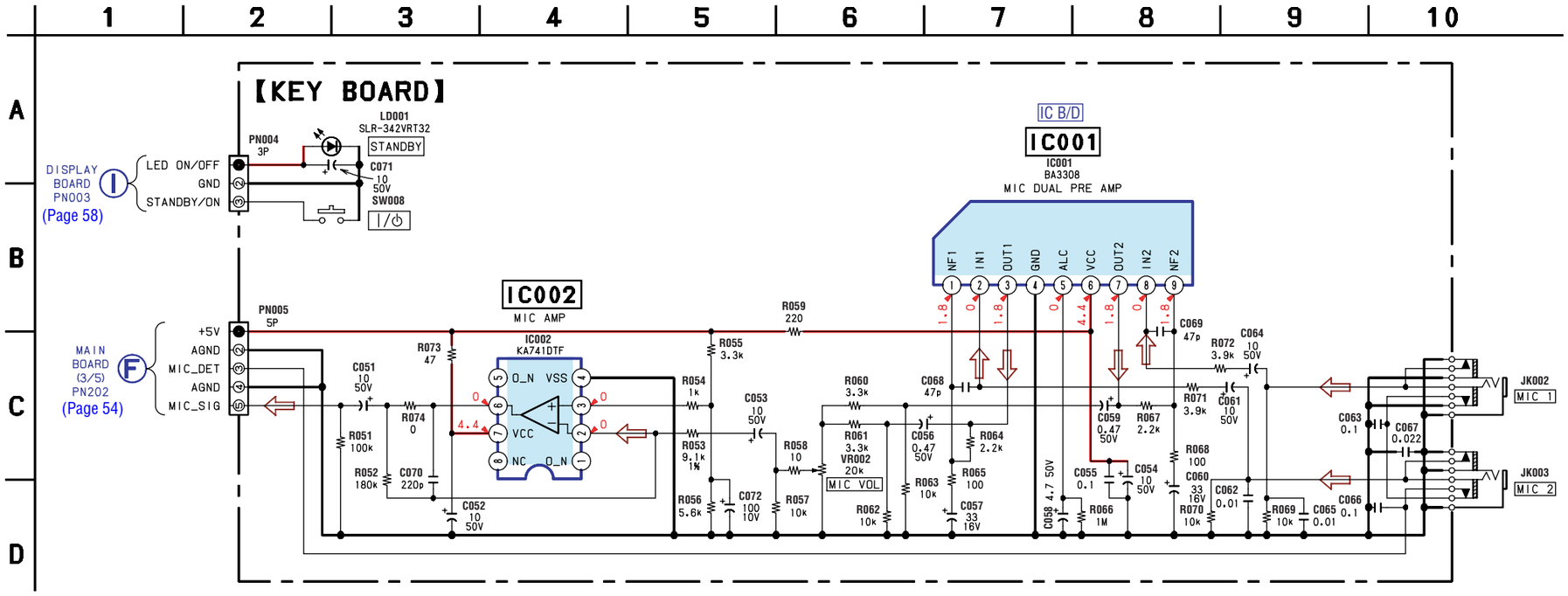

6-20. PRINTED WIRING BOARD — POWER SECTION — • Refer to page 44 for Circuit Boards Location. : Uses unleaded solder.

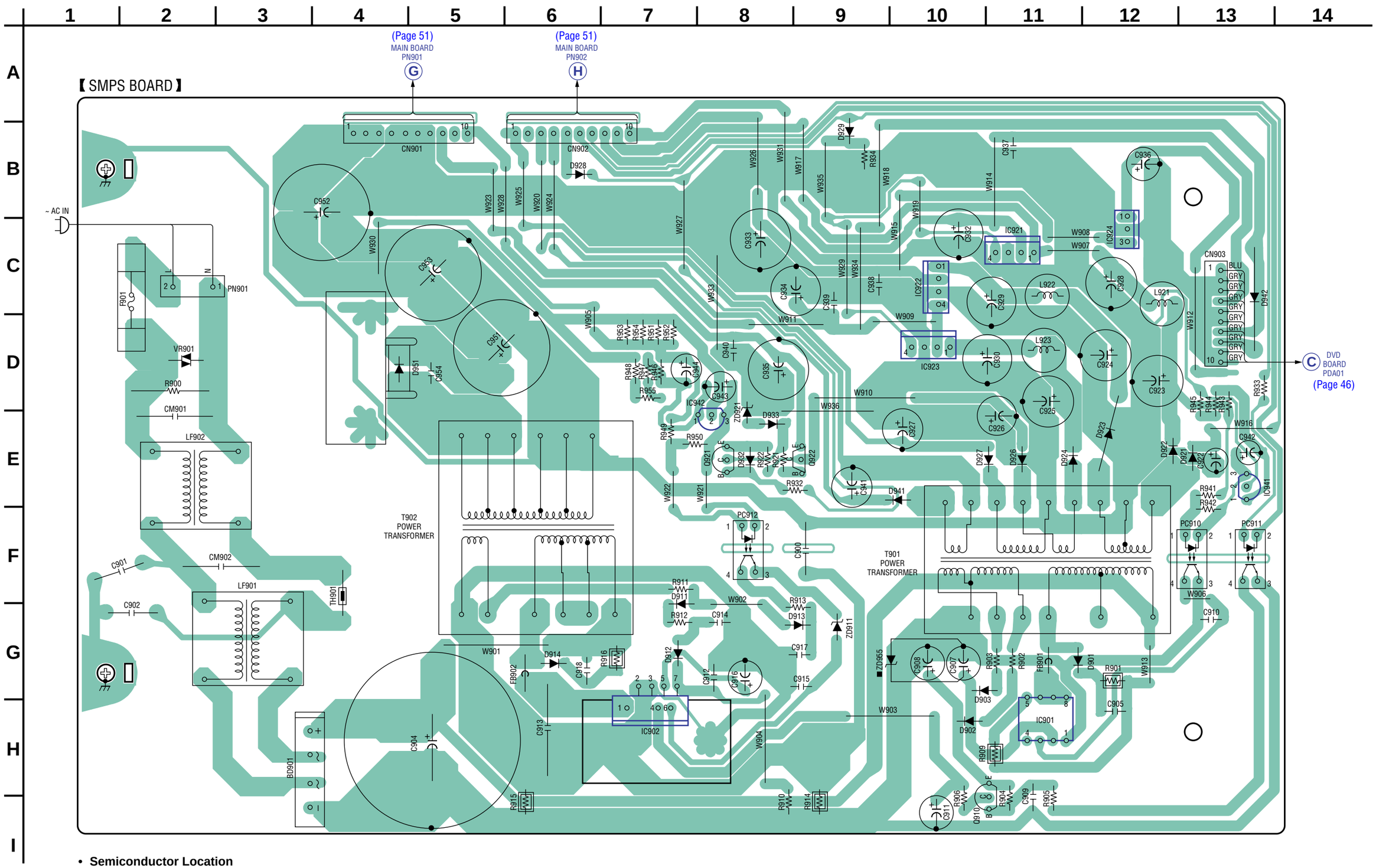

• **Semiconductor Location**

Ref. No.	Location	Ref. No.	Location	Ref. No.	Location	Ref. No.	Location	Ref. No.	Location	Ref. No.	Location
BD901	H-4	D913	G-9	D927	E-11	D951	D-4	IC924	C-12	Q910	I-10
		D914	G-6	D928	B-6			IC941	E-13	Q921	E-8
D901	G-12	D921	E-13	D929	B-9	IC901	H-11	IC942	E-8	Q922	E-9
D902	H-10	D922	E-12	D932	E-8	IC902	H-7				
D903	G-11	D923	E-12	D933	E-8	IC921	C-11	PC910	F-13	ZD911	G-9
D911	G-7	D924	E-11	D941	E-10	IC922	C-10	PC911	F-13	ZD921	E-8
D912	G-7	D926	E-11	D942	C-13	IC923	D-10	PC912	F-8	ZD955	G-10

6-21. SCHEMATIC DIAGRAM — POWER SECTION —

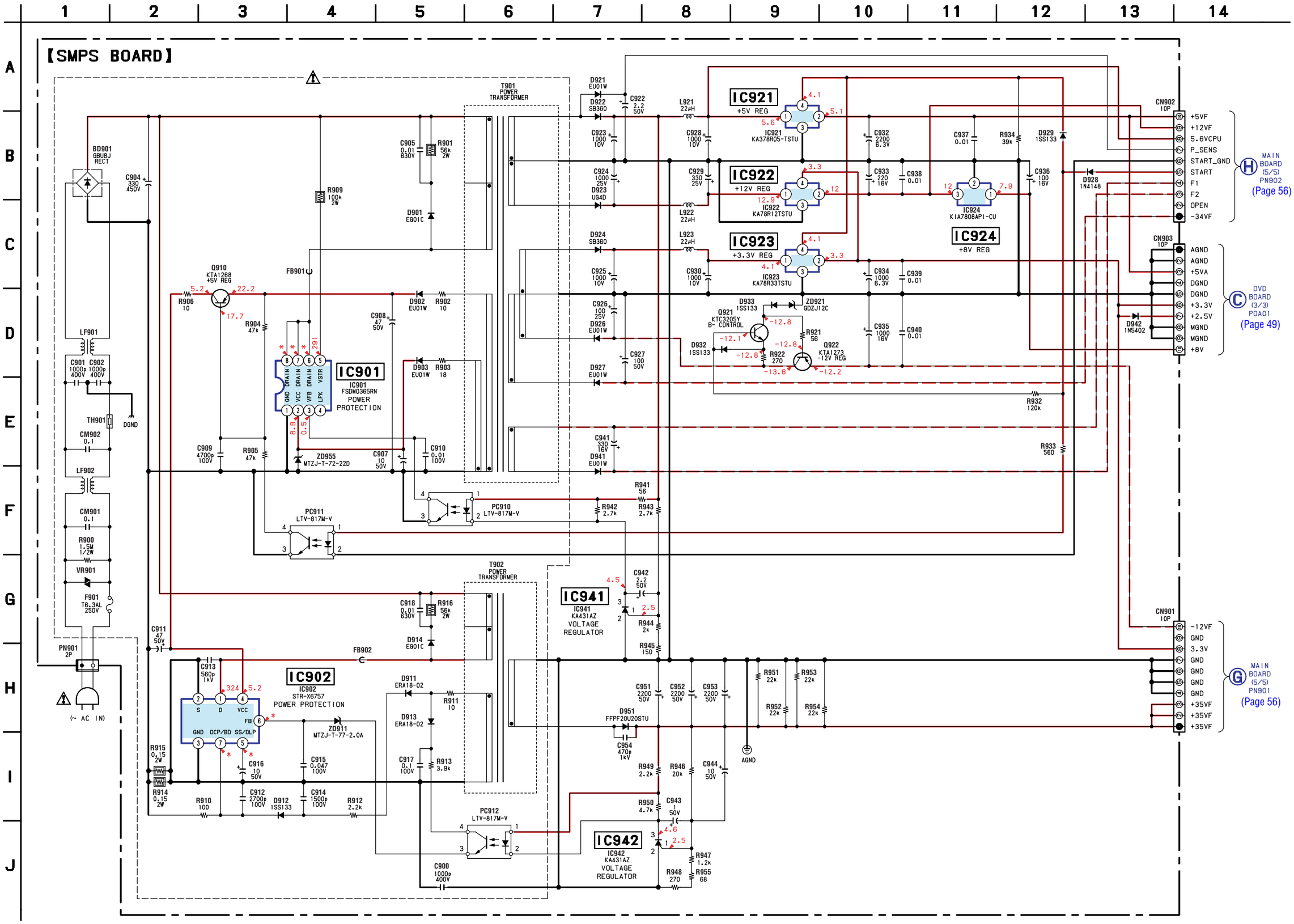

• IC Block Diagrams

IC5C1 MM1623XFBE (DVD BOARD (2/3))

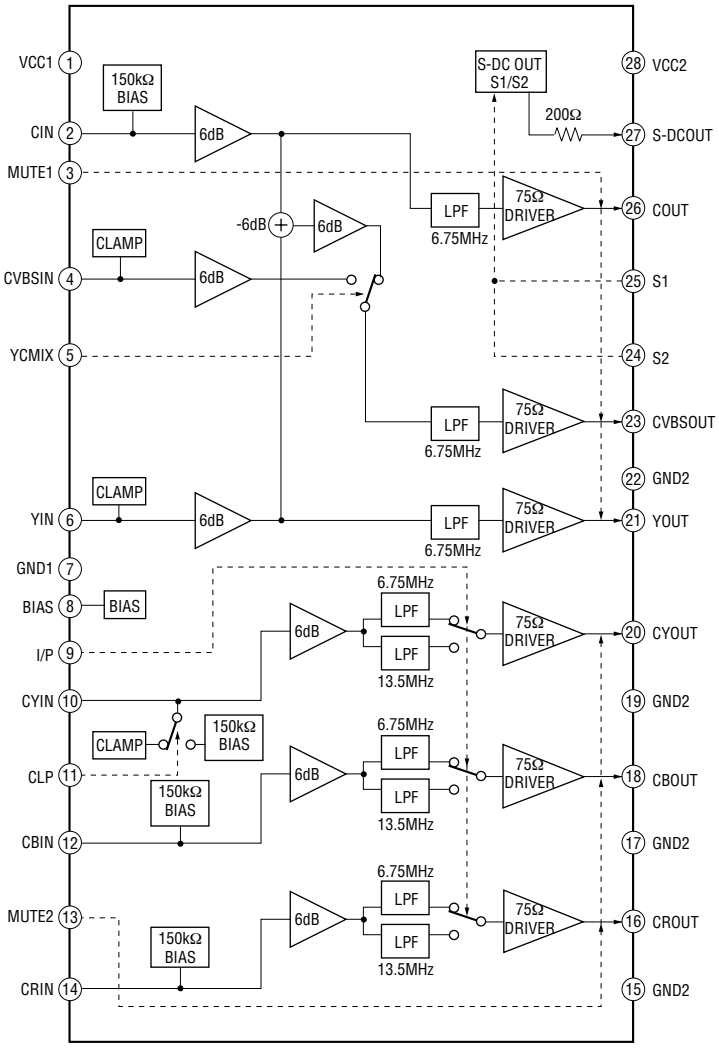

IC601 BU4052BCFV (MAIN BOARD (2/5))

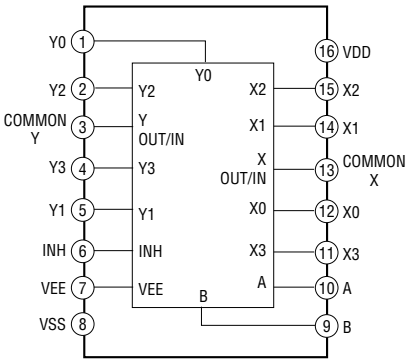

IC202 CS5331A-KSR (MAIN BOARD (3/5))
IC204 CS5331A-KSR (MAIN BOARD (3/5))

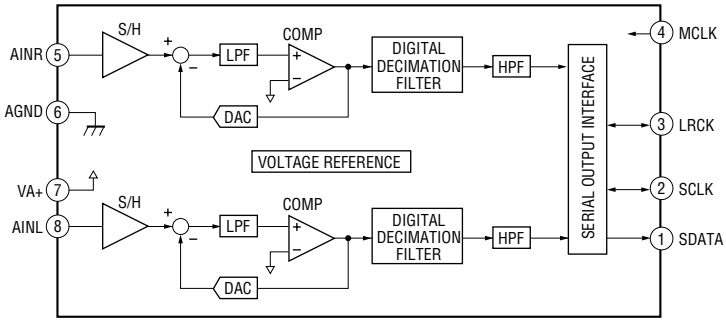

IC710 STA-508 (MAIN BOARD (4/5))
IC730 STA-508 (MAIN BOARD (4/5))
IC750 STA-508 (MAIN BOARD (4/5))
IC770 STA-508 (MAIN BOARD (4/5))

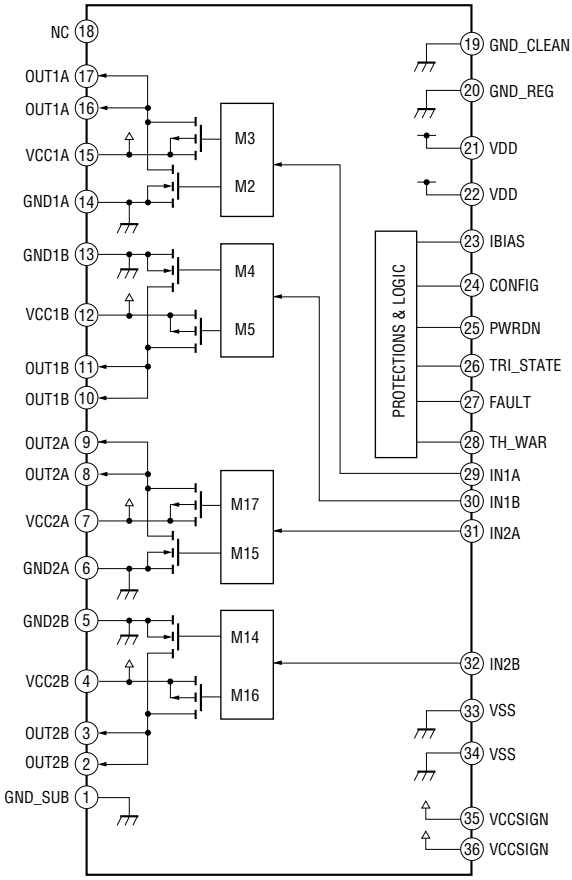

IC001 BA3308 (KEY BOARD)

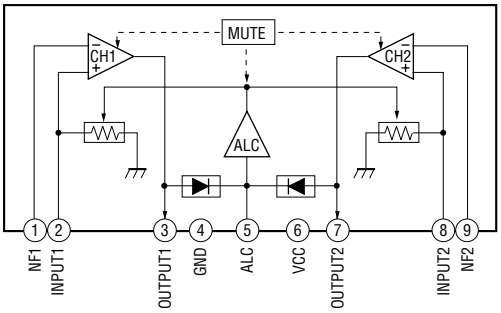

• IC Pin Description

IC301 PS9818 (DIGITAL AUDIO PROCESSOR) (MAIN BOARD (3/5))

Pin No.	Pin Name	I/O	Pin Description
1	IO_VSS	—	I/O digital ground
2	PLL_DVSS	—	PLL digital ground
3	PLL_DVDD	—	PLL peripheral digital power supply (+2.5 V)
4	PLL_XPD	I	Internal PLL power down signal input (L: active)
5	PLL_CPC	I	Internal PLL charge pump current selection input (Fixed at H in this set)
6	PLL_AVDD	—	PLL analog power supply (+2.5 V)
7	PLL_EXT_LPF	I/O	External PLL low pass filter signal input/output
8	PLL_AVSS	—	PLL analog ground
9	IO_VSS	—	I/O digital ground
10	IO_VDD	—	I/O digital power supply (+3.3 V)
11	MBCK	I/O	PCM bit clock input/output of main 8-channel audio. (Fixed at L in this set)
12	MLRCK	I/O	PCM word clock (left-right clock) input/output of main 8-channel audio. (Fixed at L in this set)
13	DVDD	—	Core digital power supply (+2.5 V)
14	DVSS	—	Core digital ground
15 to 18	MSDIN0 to MSDIN3	I	PCM serial data input of main 8-channel audio. (Fixed at L in this set)
19	SBCK	I/O	PCM bit clock input/output of sub 8-channel audio.
20	SLRCK	I/O	PCM word clock (left-right clock) input/output of sub 8-channel audio.
21	IO_VSS	—	I/O digital ground
22	IO_VDD	—	I/O digital power supply (+3.3 V)
23 to 26	SSDIN0 to SSDIN3	I/O	PCM serial data input/output of sub-channel audio.
27	EXT_MUTE	I	External mute control input (H: active) (Not used in this set)
28	IO_VSS	—	I/O digital ground
29	IO_VDD	—	I/O digital power supply (+3.3 V)
30	MIC_MCLK	O	Main clock output for external microphone input A/D converter. (Not used in this set)
31	MIC_BCK	O	PCM bit clock output of external microphone. (Not used in this set)
32	MIC_LRCK	O	PCM word clock (left-right clock) output of external microphone. (Not used in this set)
33	MIC_SDIN	I	PCM serial data input of external microphone. (Not used in this set)
34	DVDD	—	Core digital power supply (+2.5 V)
35	DVSS	—	Core digital ground
36	PWM_SWL_M	O	Negative PWM output of subwoofer line output. (Not used in this set)
37	PWM_SWL_P	O	Positive PWM output of subwoofer line output. (Not used in this set)
38	IO_VSS	—	I/O digital ground
39	IO_VDD	—	I/O digital power supply (+3.3 V)
40	PWM_HP_R_M	O	Negative PWM output of headphone right channel.
41	PWM_HP_R_P	O	Positive PWM output of headphone right channel.
42	DVDD	—	Core digital power supply (+2.5 V)
43	DVSS	—	Core digital ground
44	IO_VSS	—	I/O digital ground
45	PWM_HP_L_M	O	Negative PWM output of headphone left channel.
46	PWM_HP_L_P	O	Positive PWM output of headphone left channel.
47	IO_VDD	—	I/O digital power supply (+3.3 V)
48	PWM1_M	O	Negative PWM output of channel 1.
49	PWM1_P	O	Positive PWM output of channel 1.
50	IO_VSS	—	I/O digital ground
51	PWM2_M	O	Negative PWM output of channel 2.
52	PWM2_P	O	Positive PWM output of channel 2.
53	IO_VSS	—	I/O digital ground
54	PWM3_M	O	Negative PWM output of channel 3.
55	PWM3_P	O	Positive PWM output of channel 3.
56	IO_VDD	—	I/O digital power supply (+3.3 V)

Pin No.	Pin Name	I/O	Pin Description
57	IO_VSS	—	I/O digital ground
58	PWM4_M	O	Negative PWM output of channel 4.
59	PWM4_P	O	Positive PWM output of channel 4.
60	IO_VSS	—	I/O digital ground
61	PWM5_M	O	Negative PWM output of channel 5.
62	PWM5_P	O	Positive PWM output of channel 5.
63	DVSS	—	Core digital ground
64	IO_VSS	—	I/O digital ground
65	IO_VDD	—	I/O digital power supply (+3.3 V)
66	DVDD	—	Core digital power supply (+2.5 V)
67	PWM6_M	O	Negative PWM output of channel 6.
68	PWM6_P	O	Positive PWM output of channel 6.
69	IO_VSS	—	I/O digital ground
70	PWM7_M	O	Negative PWM output of channel 7. (Not used in this set)
71	PWM7_P	O	Positive PWM output of channel 7. (Not used in this set)
72	IO_VDD	—	I/O digital power supply (+3.3 V)
73	IO_VSS	—	I/O digital ground
74	PWM8_M	O	Negative PWM output of channel 8. (Not used in this set)
75	PWM8_P	O	Positive PWM output of channel 8. (Not used in this set)
76	OVERLOAD	I	Power stage overload indication input
77	EPD_ENA	O	External amplifier power device enable output (H: active)
78	SO/SDA	I/O	SO for SPI mode signal input/output or SDA for I2C mode signal input/output.
79	SCK/SCL	I	SCK for SPI mode signal input or SCL for I2C mode signal input.
80	DVDD	—	Core digital power supply (+2.5 V)
81	DVSS	—	Core digital ground
82	SI/I2C_AD0	I	SI for SPI mode signal input or slave address 0 for I2C mode signal input. (Fixed at H in this set)
83	/CS/I2C_AD2	I	Chip selector for SPI mode signal input or slave address 2 for I2C mode signal input. (Fixed at H in this set)
84	SPI/I2C	I	Host interface mode (SPI or I2C) select signal input (Fixed at L in this set)
85	IO_VSS	—	I/O digital ground
86	CLK_IN	I	External clock input (12.288MHz)
87	IO_VDD	—	I/O digital power supply (+3.3 V)
88	DMIX_LRCK	O	PCM word clock (left-right clock) output of downmix signal. (Not used in this set)
89	DMIX_BCK	O	PCM bit clock output of downmix signal. (Not used in this set)
90	DMIX_SDOUT	O	PCM serial data output of downmix signal. (Not used in this set)
91	DVDD	—	Core digital power supply (+2.5 V)
92	DVSS	—	Core digital ground
93	DMIX_MCLK	O	Main clock output for external downmix line output D/A converter. (Not used in this set)
94	IO_VDD	—	I/O digital power supply (+3.3 V)
95	IO_VSS	—	I/O digital ground
96	/RESET	I	H/W reset signal input (L: active)
97, 98	TEST_MODE1, TEST_MODE2	I	Test mode selection pin 1, 2 (Not used in this set)
99	SCAN_ENA	I	Scan enable signal input (H: active) (Not used in this set)
100	TEST_MODE3	I	Test mode selection pin 3 (Not used in this set)

SECTION 7
EXPLODED VIEWS

NOTE:
- The mechanical parts with no reference number in the exploded views are not supplied.
- Items marked "*" are not stocked since they are seldom required for routine service. Some delay should be anticipated when ordering these items.
- Abbreviation
  CET : East European & Russian model
  E3 : 240 V AC area in E model
  E41 : 230 V AC area in E model
  AUS : Australian model
  SP : Singapore model
  RU : Russian model
- -XX and -X mean standardized parts, so they may have some difference from the original one.
- Accessories are given in the last of this parts list.

The components identified by mark ⚠ or dotted line with mark ⚠ are critical for safety.
Replace only with part number specified.

7-1. FRONT PANEL SECTION

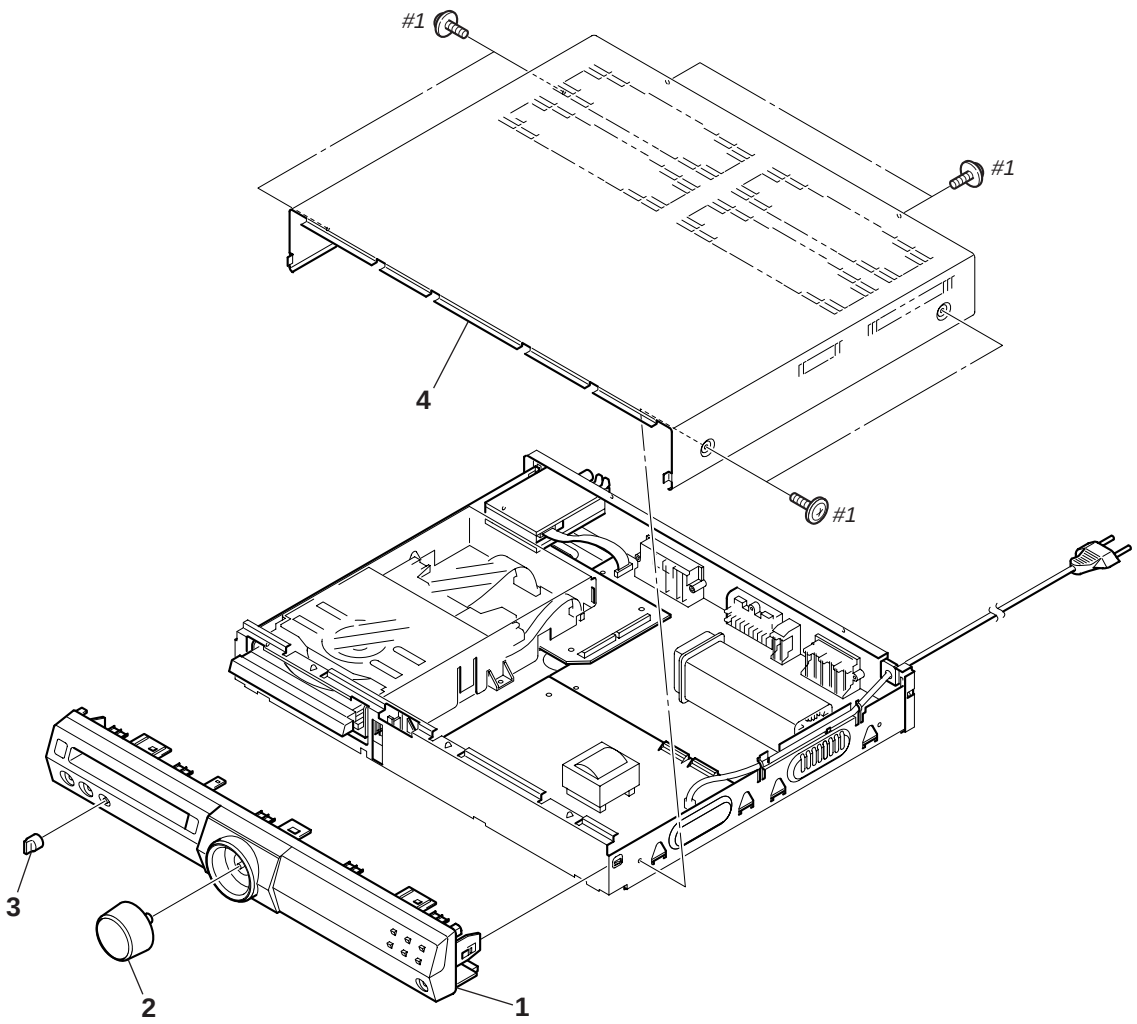

Ref. No.	Part No.	Description	Remark	Ref. No.	Part No.	Description	Remark
1	9-885-070-93	FRONT PANEL ASSY (VX55:AEP,UK,CET)		2	9-885-071-35	KNOB, VOL	
1	9-885-070-94	FRONT PANEL ASSY (VX55:E3,E41,AUS,SP,RU)		3	9-885-071-36	KNOB, MIC	
1	9-885-070-95	FRONT PANEL ASSY (VX77:AEP,UK,CET)		4	9-885-069-35	COVER, TOP	
1	9-885-070-96	FRONT PANEL ASSY (VX77:AUS,RU)		#1	7-685-646-79	SCREW +BVTP 3X8 TYPE2 IT-3	

7-2. BOARDS SECTION

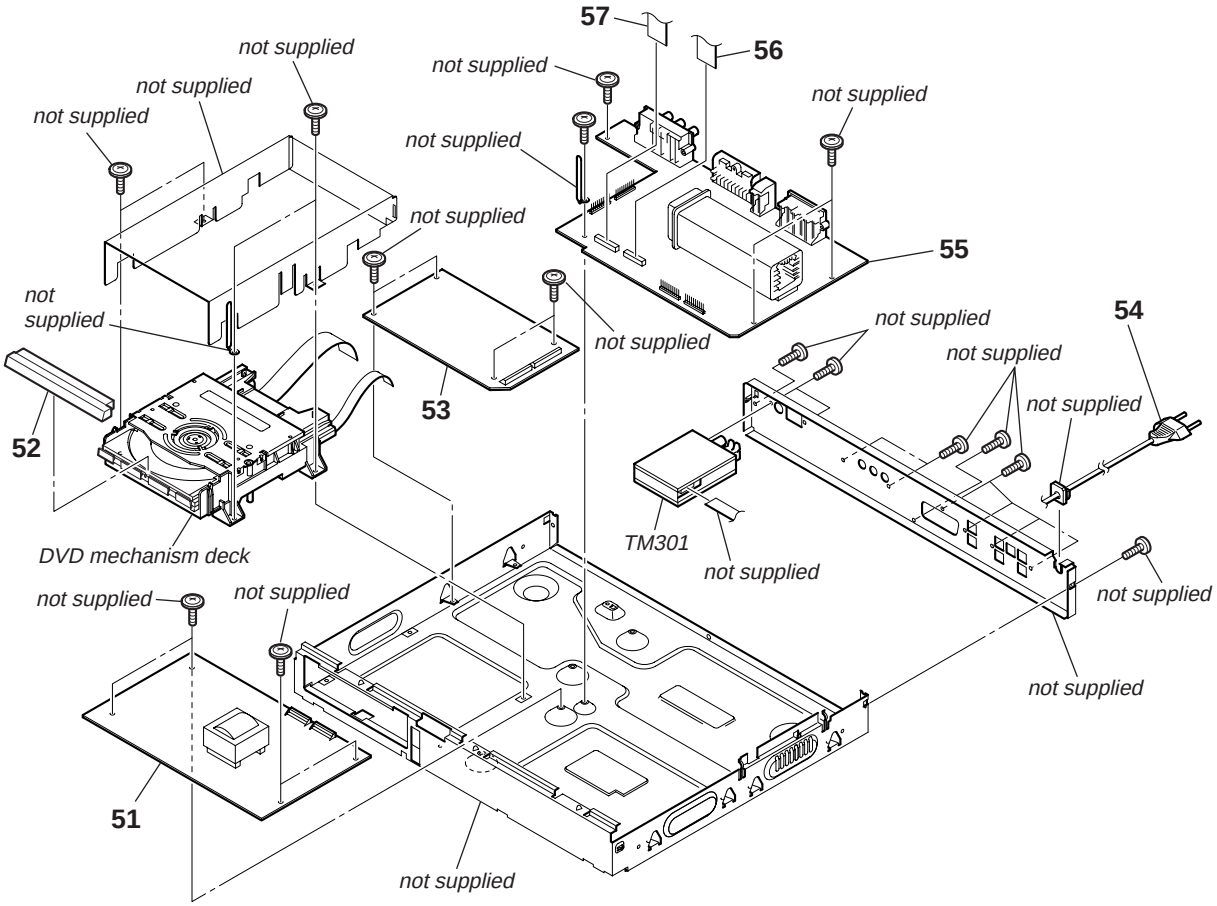

The components identified by mark ⚠ or dotted line with mark ⚠ are critical for safety.
Replace only with part number specified.

Ref. No.	Part No.	Description	Remark
51	9-885-071-05	SMPS BOARD, COMPLETE	
52	9-885-071-37	TRAY, DOOR	
53	9-885-071-06	DVD BOARD, COMPLETE (AEP,UK)	
53	9-885-071-07	DVD BOARD, COMPLETE (CET)	
53	9-885-071-08	DVD BOARD, COMPLETE (RU)	
53	9-885-071-09	DVD BOARD, COMPLETE (AUS)	
53	9-885-071-10	DVD BOARD, COMPLETE (SP)	
53	9-885-074-20	DVD BOARD, COMPLETE (E3)	
53	9-885-074-21	DVD BOARD, COMPLETE (E41)	
⚠54	9-885-071-11	CORD, POWER (UK)	
⚠54	9-885-072-40	CORD, POWER (EXCEPT UK,AUS)	
⚠54	9-885-072-41	CORD, POWER (AUS)	

Ref. No.	Part No.	Description	Remark
55	9-885-071-18	MAIN BOARD, COMPLETE (VX55:AEP,UK,CET)	
55	9-885-071-19	MAIN BOARD, COMPLETE (VX55:RU)	
55	9-885-071-20	MAIN BOARD, COMPLETE (VX55:E3,AUS,SP)	
55	9-885-071-22	MAIN BOARD, COMPLETE (VX55:E41)	
55	9-885-071-23	MAIN BOARD, COMPLETE (VX77:AEP,UK,CET)	
55	9-885-074-22	MAIN BOARD, COMPLETE (VX77:RU)	
55	9-885-074-23	MAIN BOARD, COMPLETE (VX77:AUS)	
56	9-885-069-29	CABLE, FLAT 23P	
57	9-885-069-30	CABLE, FLAT 24P	
TM301	9-885-069-34	TUNER PACK (AEP,UK,CET)	
TM301	9-885-069-53	TUNER PACK (RU)	
TM301	9-885-069-54	TUNER PACK (E3,E41,AUS,SP)	

7-3. DVD MECHANISM SECTION

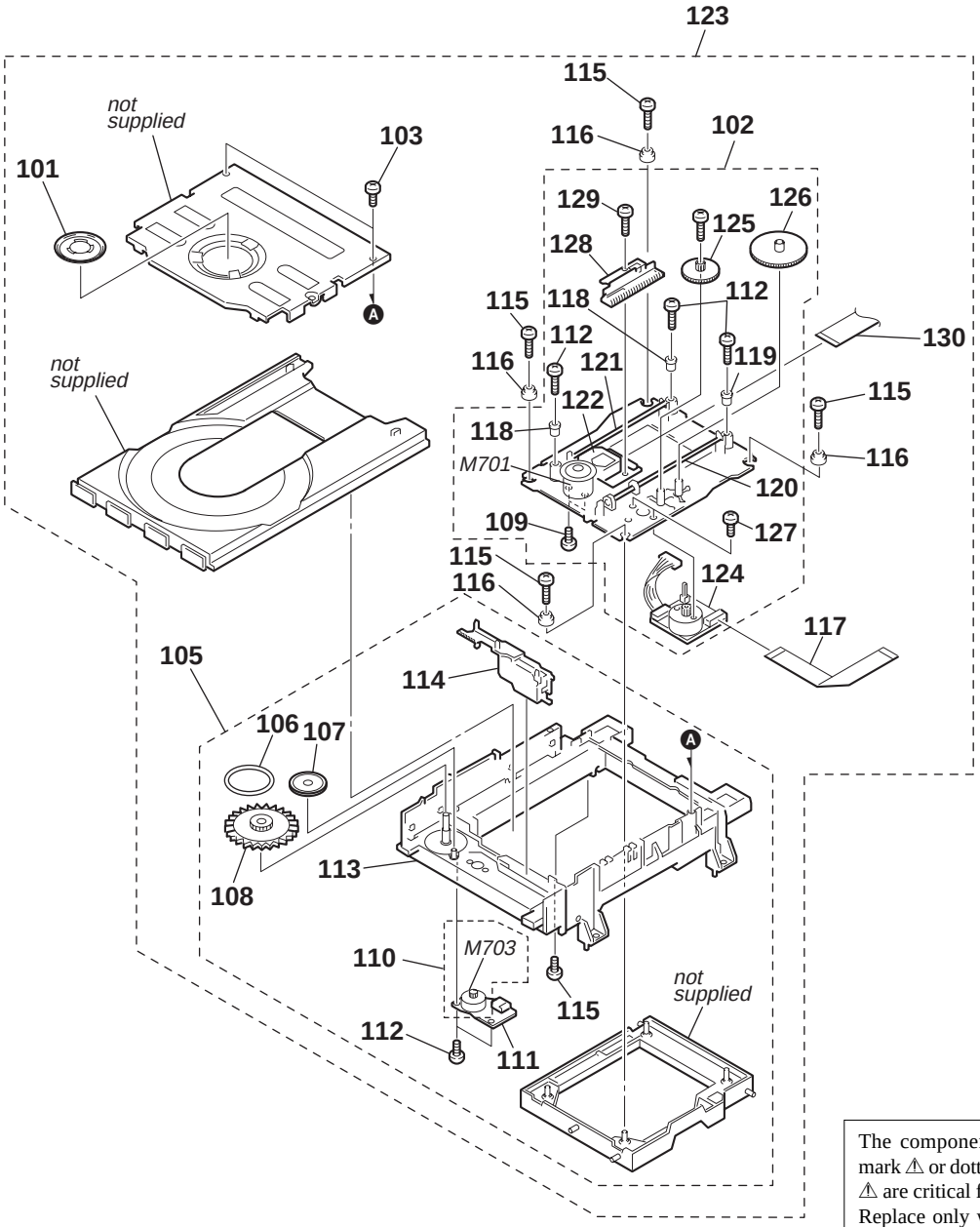

The components identified by mark ⚠ or dotted line with mark ⚠ are critical for safety.
Replace only with part number specified.

Ref. No.	Part No.	Description	Remark
101	9-885-072-02	CLAMP ASSEMBLY	
102	9-885-072-04	BASE ASSEMBLY	
103	9-885-072-33	SCREW, DRAWING	
105	9-885-072-03	BASE ASSEMBLY	
106	9-885-072-13	BELT	
107	9-885-072-14	GEAR	
108	9-885-072-19	GEAR	
109	9-885-072-37	SCREW, DRAWING	
110	9-885-072-16	MOTOR ASSEMBLY	
111	9-885-072-15	JACK (AUDIO) BOARD, COMPLETE	
112	9-885-072-35	SCREW, DRAWING	
113	9-885-072-21	BASE	
114	9-885-072-20	GUIDE	
115	9-885-072-34	SCREW, DRAWING	
116	9-885-072-12	RUBBER	
117	9-885-072-09	CABLE, FLAT 11P	
118	9-885-072-25	CAP	
119	9-885-072-26	CAP	
120	9-885-072-29	SHAFT	
121	9-885-072-30	SHAFT	
⚠122	9-885-072-32	PICK-UP, DVD	
123	9-885-072-01	DECK ASSEMBLY, VIDEO	
124	9-885-072-23	MOTOR ASSEMBLY (including M702)	
125	9-885-072-27	GEAR	
126	9-885-072-24	GEAR	
127	9-885-072-38	SCREW, DRAWING	
128	9-885-072-31	GEAR ASSEMBLY	
129	9-885-072-36	SCREW, DRAWING	
130	9-885-072-11	CABLE, FLAT 23P	
M701	9-885-072-22	MOTOR (MECH) (SPINDLE)	
M703	9-885-072-18	MOTOR (MECH) (LOADING)	

SECTION 8
ELECTRICAL PARTS LIST

NOTE:
- Due to standardization, replacements in the parts list may be different from the parts specified in the diagrams or the components used on the set.
- -XX and -X mean standardized parts, so they may have some difference from the original one.
- RESISTORS
  All resistors are in ohms.
  METAL:Metal-film resistor.
  METAL OXIDE: Metal oxide-film resistor.
  F:nonflammable
- Items marked "*" are not stocked since they are seldom required for routine service. Some delay should be anticipated when ordering these items.
- SEMICONDUCTORS
  In each case, u : µ, for example:
  uA.. : µA.. uPA.. : µPA..
  uPB.. : µPB.. uPC.. : µPC.. uPD.. : µPD..
- CAPACITORS
  uF : µF
- COILS
  uH : µH

The components identified by mark ⚠ or dotted line with mark ⚠ are critical for safety.
Replace only with part number specified.

When indicating parts by reference number, please include the board.

- Abbreviation
  CET : East European & Russian model
  E3 : 240 V AC area in E model
  E41 : 230 V AC area in E model
  AUS : Australian model
  SP : Singapore model
  RU : Russian model

Ref. No.	Part No.	Description	Remark
		DISPLAY BOARD	
		**********	
		< JACK >	
JK001	9-885-073-92	JACK, PHONE (PHONES)	
		< CONNECTOR >	
PN001	9-885-073-97	CONNECTOR (CIRC), FFC/FPC 23P	
PN002	9-885-073-98	CONNECTOR (CIRC), FFC/FPC 24P	
		< TRANSISTOR >	
Q001	9-885-073-61	TRANSISTOR KRA103M	
		< SWITCH >	
SW001	9-885-073-86	SWITCH, TACTILE (FUNCTION)	
SW002	9-885-073-86	SWITCH, TACTILE (▶▶I /PRESET+)	
SW003	9-885-073-86	SWITCH, TACTILE (I◀◀ /PRESET–)	
SW004	9-885-073-86	SWITCH, TACTILE (■)	
SW005	9-885-073-86	SWITCH, TACTILE (❚❚)	
SW006	9-885-073-86	SWITCH, TACTILE (▶)	
SW007	9-885-073-86	SWITCH, TACTILE (⏏)	
		< DIGITRON >	
VFD001	9-885-073-83	DIGITRON 11BT-232GNK	
**********			
	9-885-071-06	DVD BOARD, COMPLETE (AEP,UK)	
	9-885-071-07	DVD BOARD, COMPLETE (CET)	
	9-885-071-08	DVD BOARD, COMPLETE (RU)	
	9-885-071-09	DVD BOARD, COMPLETE (AUS)	
	9-885-071-10	DVD BOARD, COMPLETE (SP)	
	9-885-074-20	DVD BOARD, COMPLETE (E3)	
	9-885-074-21	DVD BOARD, COMPLETE (E41)	
		**********	
		< IC >	
IC201	9-885-041-57	IC MT1336E	
IC202	9-885-073-50	IC LA6560-ATE-L	
IC501	9-885-073-38	IC MT1379EEC	
IC505	supplied with complete DVD board.		
IC506	9-885-073-40	IC M12L64164A-7T	
IC5A1	supplied with complete DVD board.		
IC5C1	9-885-041-64	IC MM1623XFBE	

Ref. No.	Part No.	Description	Remark
		< CONNECTOR >	
J6	9-885-073-73	CONNECTOR (CIRC), HOUSING 4P	
		< FILTER >	
L201	9-885-073-59	INDUCTOR, RADIAL LEAD 10uH	
L202	9-885-058-23	FILTER (CIRC), EMC	
L203	9-885-073-59	INDUCTOR, RADIAL LEAD 10uH	
L204	9-885-058-23	FILTER (CIRC), EMC	
L231	9-885-058-23	FILTER (CIRC), EMC	
L251	9-885-058-23	FILTER (CIRC), EMC	
L264	9-885-058-23	FILTER (CIRC), EMC	
L265	9-885-058-23	FILTER (CIRC), EMC	
L501	9-885-058-23	FILTER (CIRC), EMC	
L502	9-885-058-23	FILTER (CIRC), EMC	
L504	9-885-058-23	FILTER (CIRC), EMC	
L5C1	9-885-058-23	FILTER (CIRC), EMC	
L603	9-885-058-23	FILTER (CIRC), EMC	
L604	9-885-058-23	FILTER (CIRC), EMC	
		< CONNECTOR >	
PDA02	9-885-073-94	CONNECTOR (CIRC), BOARD TO BOARD 14P	
PDA03	9-885-073-94	CONNECTOR (CIRC), BOARD TO BOARD 14P	
PDM01	9-885-055-76	CONNECTOR, 23P	
PDM02	9-885-055-75	CONNECTOR, 11P	
		< TRANSISTOR >	
Q201	9-855-033-24	TRANSISTOR KTC3875S-GR-T1	
Q202	8-729-048-50	FET 2SK3018-T106	
Q203	8-729-048-50	FET 2SK3018-T106	
Q204	9-885-073-62	TRANSISTOR 2SA1037K-Q	
Q205	9-885-073-62	TRANSISTOR 2SA1037K-Q	
Q501	9-855-033-24	TRANSISTOR KTC3875S-GR-T1	
		< COIL >	
R521	9-885-073-58	INDUCTOR, CHIP	
		< RESONATOR >	
X501	9-885-040-11	RESONATOR, CRYSTAL (27MHz)	
**********			

Ref. No.	Part No.	Description	Remark
		KEY BOARD	
		**********	
		< IC >	
IC001	9-885-073-53	IC BA3308	
IC002	9-885-073-37	IC KA741DTF	
		< JACK >	
JK002	9-885-073-92	JACK, PHONE (MIC 1)	
JK003	9-885-073-92	JACK, PHONE (MIC 2)	
		< DIODE >	
LD001	9-885-073-18	LED SLR-342VRT32 (STANDBY)	
		< CONNECTOR >	
PN004	9-885-073-72	CONNECTOR (CIRC), WAFER 3P	
PN005	9-885-073-74	CONNECTOR (CIRC), WAFER 5P	
		< SWITCH >	
SW008	9-885-073-86	SWITCH, TACTILE (I/⏻)	
**********			
	9-885-071-18	MAIN BOARD, COMPLETE (VX55:AEP,UK,CET)	
	9-885-071-19	MAIN BOARD, COMPLETE (VX55:RU)	
	9-885-071-20	MAIN BOARD, COMPLETE (VX55:E3,AUS,SP)	
	9-885-071-22	MAIN BOARD, COMPLETE (VX55:E41)	
	9-885-071-23	MAIN BOARD, COMPLETE (VX77:AEP,UK,CET)	
	9-885-074-22	MAIN BOARD, COMPLETE (VX77:RU)	
	9-885-074-23	MAIN BOARD, COMPLETE (VX77:AUS)	
		**********	
		< DIODE >	
D101	9-885-073-19	DIODE RL102-10C	
D102	9-885-073-19	DIODE RL102-10C	
D103	9-885-073-19	DIODE RL102-10C	
D104	9-885-073-19	DIODE RL102-10C	
D105	9-885-073-19	DIODE RL102-10C	
D115	8-719-991-33	DIODE 1SS133T-77 (VX55:E41)	
D116	8-719-991-33	DIODE 1SS133T-77 (AEP,UK,CET)	
D117	8-719-991-33	DIODE 1SS133T-77 (AEP,UK,CET,RU)	
D118	8-719-991-33	DIODE 1SS133T-77	
D119	8-719-991-33	DIODE 1SS133T-77 (VX77)	
D120	8-719-991-33	DIODE 1SS133T-77	
D300	9-885-073-19	DIODE RL102-10C	
D301	8-719-991-33	DIODE 1SS133T-77	
D600	8-719-991-33	DIODE 1SS133T-77 (AEP,UK,CET,RU)	
D801	8-719-991-33	DIODE 1SS133T-77	
D802	8-719-991-33	DIODE 1SS133T-77	
D981	8-719-991-33	DIODE 1SS133T-77	
		< FILTER >	
FB508	9-885-058-23	FILTER (CIRC), EMC	
FB509	9-885-058-23	FILTER (CIRC), EMC	
FB601	9-885-058-23	FILTER (CIRC), EMC (E3,E41,AUS,SP)	
FB602	9-885-058-23	FILTER (CIRC), EMC (E3,E41,AUS,SP)	
FB603	9-885-058-23	FILTER (CIRC), EMC (E3,E41,AUS,SP)	
FB604	9-885-058-23	FILTER (CIRC), EMC (E3,E41,AUS,SP)	
FB605	9-885-058-23	FILTER (CIRC), EMC (E3,E41,AUS,SP)	
FB606	9-885-058-23	FILTER (CIRC), EMC	
FB607	9-885-058-23	FILTER (CIRC), EMC	
FB612	9-885-058-23	FILTER (CIRC), EMC (AEP,UK,CET,RU)	
FB613	9-885-058-23	FILTER (CIRC), EMC (AEP,UK,CET,RU)	
FB614	9-885-058-23	FILTER (CIRC), EMC (AEP,UK,CET,RU)	
FB615	9-885-058-23	FILTER (CIRC), EMC (AEP,UK,CET,RU)	
FB616	9-885-058-23	FILTER (CIRC), EMC (AEP,UK,CET,RU)	
		< IC >	
IC101	9-885-073-39	IC LC876848C-54C7	
IC202	9-885-073-36	IC CS5331A-KSR	
IC204	9-885-073-36	IC CS5331A-KSR	
IC301	9-885-073-48	IC PS9818	
IC501	8-759-656-83	IC NJM4580MD-(TE2)	
IC502	8-759-656-83	IC NJM4580MD-(TE2)	
IC601	9-885-073-54	IC BU4052BCFV	
IC710	9-885-073-52	IC STA-508	
IC730	9-885-073-52	IC STA-508	
IC750	9-885-073-52	IC STA-508	
IC770	9-885-073-52	IC STA-508	
		< JACK >	
JK601	9-885-073-89	JACK, RCA (MONITOR OUT VIDEO, VIDEO AUDIO IN L/R) (AEP,UK,CET,RU)	
JK601	9-885-073-90	JACK, RCA (MONITOR OUT VIDEO, VIDEO AUDIO IN L/R,S VIDEO (DVD ONLY), COMPONENT VIDEO OUT Y,PB/CB,PR/CR) (E3,E41,AUS,SP)	
JK602	9-885-073-91	JACK, SCART (EURO AV OUTPUT(TO TV)) (AEP,UK,CET,RU)	
		< FILTER >	
L102	9-885-058-23	FILTER (CIRC), EMC	
L103	9-885-058-23	FILTER (CIRC), EMC	
L104	9-885-058-23	FILTER (CIRC), EMC	
L105	9-885-058-23	FILTER (CIRC), EMC	
L106	9-885-058-23	FILTER (CIRC), EMC	
L200	9-885-058-23	FILTER (CIRC), EMC	
L207	9-885-073-57	INDUCTOR, AXIAL LEAD 470uH	
L208	9-885-073-57	INDUCTOR, AXIAL LEAD 470uH	
L300	9-885-058-23	FILTER (CIRC), EMC	
L301	9-885-058-23	FILTER (CIRC), EMC	
L303	9-885-058-23	FILTER (CIRC), EMC	
L304	9-885-058-23	FILTER (CIRC), EMC	
L305	9-885-058-23	FILTER (CIRC), EMC	
L309	9-885-058-23	FILTER (CIRC), EMC	
L710	9-885-058-23	FILTER (CIRC), EMC	
L730	9-885-058-23	FILTER (CIRC), EMC	
L750	9-885-058-23	FILTER (CIRC), EMC	
L770	9-885-058-23	FILTER (CIRC), EMC	
		< CONNECTOR >	
PN101	9-885-055-76	CONNECTOR, 23P	
PN102	9-885-074-00	CONNECTOR (CIRC), FFC/FPC 24P	
PN103	9-885-054-96	CONNECTOR, FFC 12P	
PN200	9-885-073-96	CONNECTOR (CIRC), BOARD TO BOARD 14P	
PN201	9-885-073-96	CONNECTOR (CIRC), BOARD TO BOARD 14P	

Ref. No.	Part No.	Description	Remark
PN202	9-885-073-74	CONNECTOR (CIRC), WAFER 5P	
PN800	9-885-073-71	CONNECTOR (CIRC), HOUSING 2P	
PN901	9-885-073-95	CONNECTOR (CIRC), BOARD TO BOARD 10P	
PN902	9-885-073-95	CONNECTOR (CIRC), BOARD TO BOARD 10P	
		< TRANSISTOR >	
Q101	8-729-036-73	TRANSISTOR KRC103M	
Q503	9-885-073-67	TRANSISTOR KTD1302	
Q504	9-885-073-67	TRANSISTOR KTD1302	
Q601	9-885-073-64	TRANSISTOR KTA1267-Y (AEP,UK,CET,RU)	
Q602	9-885-073-68	TRANSISTOR KTC3198-TP-BL	(AEP,UK,CET,RU)
Q603	8-729-036-73	TRANSISTOR KRC103M (AEP,UK,CET,RU)	
Q604	8-729-036-73	TRANSISTOR KRC103M (AEP,UK,CET,RU)	
Q605	8-729-036-73	TRANSISTOR KRC103M (AEP,UK,CET,RU)	
Q606	9-885-073-68	TRANSISTOR KTC3198-TP-BL	
Q607	9-885-073-68	TRANSISTOR KTC3198-TP-BL	(AEP,UK,CET,RU)
Q609	9-885-073-60	TRANSISTOR KRA102M	
Q701	9-885-073-68	TRANSISTOR KTC3198-TP-BL	
Q702	9-885-073-63	TRANSISTOR KTA1266-GR	
Q971	9-885-073-66	TRANSISTOR KTA1281Y	
Q972	8-729-043-89	TRANSISTOR KTC3205Y	
Q973	9-885-073-68	TRANSISTOR KTC3198-TP-BL	
Q975	8-729-043-89	TRANSISTOR KTC3205Y	
Q982	9-885-073-61	TRANSISTOR KRA103M	
Q983	9-885-073-64	TRANSISTOR KTA1267-Y	
		< VIBRATOR >	
X101	9-885-054-89	VIBRATOR, CRYSTAL (9.8304MHz)	
X201	9-885-055-90	OSCILLATOR (12.288MHz)	
		< DIODE >	
ZD100	9-885-073-33	DIODE GDZJ9.1C	
ZD971	9-885-073-29	DIODE UZ-30BSC	
ZD972	9-885-073-32	DIODE GDZJ5.1B	
ZD973	9-885-073-32	DIODE GDZJ5.1B	
ZD974	9-885-073-30	DIODE GDZ3.3B	
ZD981	9-885-073-31	DIODE GDZJ4.7B	

****

	9-885-071-05	SMPS BOARD, COMPLETE			
		**********			
		< DIODE >			
⚠BD901	9-885-073-26	DIODE GBU8J			
		< CAPACITOR >			
⚠C900	9-885-073-15	CERAMIC	0.001uF		400V
⚠C901	9-885-073-15	CERAMIC	0.001uF		400V
⚠C902	9-885-073-15	CERAMIC	0.001uF		400V
⚠C904	9-885-058-16	ELECT	330uF	20%	450V
C954	9-885-073-80	FILM	470PF		1KV
⚠CM901	9-885-073-81	CAPACITOR	0.1uF		
⚠CM902	9-885-073-81	CAPACITOR	0.1uF		
		< CONNECTOR >			
CN901	9-885-073-93	CONNECTOR (CIRC), BOARD TO BOARD 10P			
CN902	9-885-073-93	CONNECTOR (CIRC), BOARD TO BOARD 10P			
CN903	9-885-073-76	CONNECTOR (CIRC), WAFER 10P			
		< DIODE >			
⚠D901	9-885-073-16	DIODE EG01C			
⚠D902	8-719-085-16	DIODE EU01W			
⚠D903	8-719-085-16	DIODE EU01W			
⚠D911	9-885-073-20	DIODE ERA18-02KFRB			
⚠D912	8-719-991-33	DIODE 1SS133T-77			
⚠D913	9-885-073-20	DIODE ERA18-02KFRB			
⚠D914	9-885-073-16	DIODE EG01C			
D921	8-719-085-16	DIODE EU01W			
D922	9-885-073-25	DIODE SB360			
D923	9-885-073-24	DIODE UG4D			
D924	9-885-073-25	DIODE SB360			
D926	8-719-085-16	DIODE EU01W			
D927	8-719-085-16	DIODE EU01W			
D928	8-719-991-33	DIODE 1SS133T-77			
D929	8-719-991-33	DIODE 1SS133T-77			
D932	8-719-991-33	DIODE 1SS133T-77			
D933	8-719-991-33	DIODE 1SS133T-77			
D941	8-719-085-16	DIODE EU01W			
D942	9-885-073-17	DIODE 1N5402			
D951	9-885-055-56	DIODE FFPF20U20STU			
		< FUSE >			
⚠F901	9-885-073-35	FUSE (T6.3AL/250V)			
		< FILTER >			
⚠FB901	9-885-073-85	FILTER (CIRC), EMC			
⚠FB902	9-885-073-85	FILTER (CIRC), EMC			
		< IC >			
⚠IC901	9-885-073-46	IC FSDM0365RN			
⚠IC902	9-885-073-49	IC STR-X6757			
IC921	9-885-073-43	IC KA378R05-TSTU			
IC922	9-885-073-44	IC KA78R12TSTU			
IC923	8-759-544-11	IC KA78R33TSTU			
IC924	9-885-073-47	IC KIA7808API-CU			
IC941	9-885-073-56	IC KA431AZ			
IC942	9-885-073-56	IC KA431AZ			
		< COIL >			
L921	9-885-073-84	COIL, CHOKE			
L922	9-885-073-84	COIL, CHOKE			
L923	9-885-073-84	COIL, CHOKE			
		< PHOTO COUPLER >			
⚠PC910	8-749-018-95	PHOTO COUPLER LTV-817M-V			
⚠PC911	8-749-018-95	PHOTO COUPLER LTV-817M-V			
⚠PC912	8-749-018-95	PHOTO COUPLER LTV-817M-V			
		< CONNECTOR >			
PN901	9-885-073-70	CONNECTOR (CIRC), DRAWING 3P			
		< TRANSISTOR >			
⚠Q910	9-885-073-65	TRANSISTOR KTA1268-BL			

The components identified by mark ⚠ or dotted line with mark ⚠ are critical for safety.
Replace only with part number specified.

Ref. No.	Part No.	Description	Remark
Q921	8-729-043-89	TRANSISTOR KTC3205Y	
Q922	8-729-040-76	TRANSISTOR KTA1273-Y-AT	
		< TRANSFORMER >	
⚠T901	9-885-073-79	TRANSFORMER, SMPS (COIL)	
⚠T902	9-885-073-77	TRANSFORMER, SMPS (COIL)	
		< THERMISTOR >	
⚠TH901	9-885-055-61	THERMISTOR 4.0OHM	
		< DIODE >	
⚠ZD911	8-719-109-50	DIODE RD2.0ESB1	
ZD921	9-885-073-27	DIODE GDZJ12C	
ZD955	8-719-947-79	DIODE MTZJ-T-72-22D	

****

MISCELLANEOUS
****

⚠54	9-885-071-11	CORD, POWER (UK)	
⚠54	9-885-072-40	CORD, POWER (EXCEPT UK,AUS)	
⚠54	9-885-072-41	CORD, POWER (AUS)	
56	9-885-069-29	CABLE, FLAT 23P	
57	9-885-069-30	CABLE, FLAT 24P	
110	9-885-072-16	MOTOR ASSEMBLY	
117	9-885-072-09	CABLE, FLAT 11P	
⚠122	9-885-072-32	PICK-UP, DVD	
124	9-885-072-23	MOTOR ASSEMBLY (including M702)	
130	9-885-072-11	CABLE, FLAT 23P	
M701	9-885-072-22	MOTOR (MECH) (SPINDLE)	
M703	9-885-072-18	MOTOR (MECH) (LOADING)	
TM301	9-885-069-34	TUNER PACK (AEP,UK,CET)	
TM301	9-885-069-53	TUNER PACK (RU)	
TM301	9-885-069-54	TUNER PACK (E3,E41,AUS,SP)	

The components identified by mark ⚠ or dotted line with mark ⚠ are critical for safety.
Replace only with part number specified.

REVISION HISTORY

Clicking the version allows you to jump to the revised page.
Also, clicking the version at the upper on the revised page allows you to jump to the next revised page.

Ver.	Date	Description of Revision
1.0	2004. 10	New
1.1	2004. 12	Addition of Disassembly, Electrical Troubleshooting Guide, Diagrams and Electrical Parts List.
1.2	2005. 06	The change of the parts supply: IC505 and IC5A1. (SPM-05072)
1.3	2005. 10	Ref. No. 104 (TRAY) is change to not supplied. (SPM-05173)