MAX232x Dual EIA-232 Drivers/Receivers

1 Features

- Meets or Exceeds TIA/EIA-232-F and ITU Recommendation V.28
- Operates From a Single 5-V Power Supply With 1.0-µF Charge-Pump Capacitors
- Operates up to 120 kbit/s
- Two Drivers and Two Receivers
- ±30-V Input Levels
- Low Supply Current: 8 mA Typical
- ESD Protection Exceeds JESD 22
  - 2000-V Human-Body Model (A114-A)
- Upgrade With Improved ESD (15-kV HBM) and 0.1-µF Charge-Pump Capacitors is Available With the MAX202 Device

2 Applications

- TIA/EIA-232-F
- Battery-Powered Systems
- Terminals
- Modems
- Computers

3 Description

The MAX232 device is a dual driver/receiver that includes a capacitive voltage generator to supply TIA/EIA-232-F voltage levels from a single 5-V supply. Each receiver converts TIA/EIA-232-F inputs to 5-V TTL/CMOS levels. These receivers have a typical threshold of 1.3 V, a typical hysteresis of 0.5 V, and can accept ±30-V inputs. Each driver converts TTL/CMOS input levels into TIA/EIA-232-F levels.

Device Information(1)

ORDER NUMBER	PACKAGE (PIN)	BODY SIZE
MAX232x	SOIC (16)	9.90 mm × 3.91 mm
	SOIC (16)	10.30 mm × 7.50 mm
	PDIP (16)	19.30 mm × 6.35 mm
	SOP (16)	10.3 mm × 5.30 mm

(1) For all available packages, see the orderable addendum at the end of the datasheet.

4 Simplified Schematic

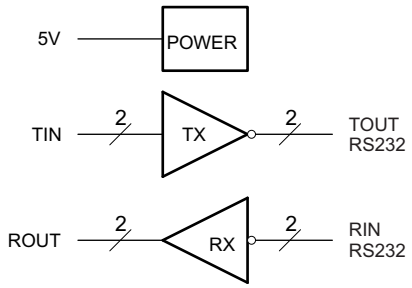

An IMPORTANT NOTICE at the end of this data sheet addresses availability, warranty, changes, use in safety-critical applications, intellectual property matters and other important disclaimers. PRODUCTION DATA.

Table of Contents

1 Features ... 1
2 Applications ... 1
3 Description ... 1
4 Simplified Schematic ... 1
5 Revision History ... 2
6 Pin Configuration and Functions ... 3
7 Specifications ... 4
7.1 Absolute Maximum Ratings ... 4
7.2 Handling Ratings ... 4
7.3 Recommended Operating Conditions ... 4
7.4 Thermal Information ... 4
7.5 Electrical Characteristics — Device ... 4
7.6 Electrical Characteristics — Driver ... 5
7.7 Electrical Characteristics — Receiver ... 5
7.8 Switching Characteristics ... 5
7.9 Typical Characteristics ... 6
8 Parameter Measurement Information ... 7
9 Detailed Description ... 9
9.1 Overview ... 9
9.2 Functional Block Diagram ... 9
9.3 Feature Description ... 9
9.4 Device Functional Modes ... 9
10 Application and Implementation ... 10
10.1 Application Information ... 10
10.2 Typical Application ... 10
11 Power Supply Recommendations ... 11
12 Layout ... 11
12.1 Layout Guidelines ... 11
12.2 Layout Example ... 11
13 Device and Documentation Support ... 12
13.1 Related Links ... 12
13.2 Trademarks ... 12
13.3 Electrostatic Discharge Caution ... 12
13.4 Glossary ... 12
14 Mechanical, Packaging, and Orderable Information ... 12

5 Revision History

Changes from Revision L (March 2004) to Revision M	Page
• Removed Ordering Information table.	1
• Added Handling Rating table, Feature Description section, Device Functional Modes, Application and Implementation section, Power Supply Recommendations section, Layout section, Device and Documentation Support section, and Mechanical, Packaging, and Orderable Information section.	1
• Moved T_{stg} to Handling Ratings table.	4

Copyright © 1989–2014, Texas Instruments Incorporated

6 Pin Configuration and Functions

Top View

MAX232 . . . D, DW, N, OR NS PACKAGE
MAX232I . . . D, DW, OR N PACKAGE
(TOP VIEW)

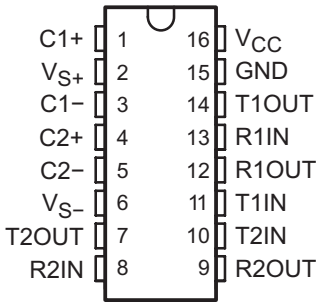

Pin Functions

PIN		TYPE	DESCRIPTION
NAME	NO.		
C1+	1	—	Positive lead of C1 capacitor
VS+	2	O	Positive charge pump output for storage capacitor only
C1-	3	—	Negative lead of C1 capacitor
C2+	4	—	Positive lead of C2 capacitor
C2-	5	—	Negative lead of C2 capacitor
VS-	6	O	Negative charge pump output for storage capacitor only
T2OUT, T1OUT	7, 14	O	RS232 line data output (to remote RS232 system)
R2IN, R1IN	8, 13	I	RS232 line data input (from remote RS232 system)
R2OUT, R1OUT	9, 12	O	Logic data output (to UART)
T2IN, T1IN	10, 11	I	Logic data input (from UART)
GND	15	—	Ground
V_{CC}	16	—	Supply Voltage, Connect to external 5V power supply

Copyright © 1989–2014, Texas Instruments Incorporated

7 Specifications

7.1 Absolute Maximum Ratings[1]

over operating free-air temperature range (unless otherwise noted)

			MIN	MAX	UNIT
V_{CC}	Input Supply voltage range[2]		–0.3	6	V
V_{S+}	Positive output supply voltage range		V_{CC} – 0.3	15	V
V_{S-}	Negative output supply voltage range		–0.3	–15	V
V_I	Input voltage range	T1IN, T2IN	–0.3	V_{CC} + 0.3	V
		R1IN, R2IN		±30	
V_O	Output voltage range	T1OUT, T2OUT	V_{S-} – 0.3	V_{S+} + 0.3	V
		R1OUT, R2OUT	–0.3	V_{CC} + 0.3	
	Short-circuit duration	T1OUT, T2OUT	Unlimited		
T_J	Operating virtual junction temperature			150	°C

(1) Stresses beyond those listed under *Absolute Maximum Ratings* may cause permanent damage to the device. These are stress ratings only, and functional operation of the device at these or any other conditions beyond those indicated under *Recommended Operating Conditions* is not implied. Exposure to absolute-maximum-rated conditions for extended periods may affect device reliability.
(2) All voltages are with respect to network GND.

7.2 Handling Ratings

			MIN	MAX	UNIT
T_{stg}	Storage temperature range		-65	150	°C
$V_{(ESD)}$	Electrostatic discharge	Human body model (HBM), per ANSI/ESDA/JEDEC JS-001, all pins[1]	0	2000	V
		Charged device model (CDM), per JEDEC specification JESD22-C101, all pins[2]	0	1000	

(1) JEDEC document JEP155 states that 500-V HBM allows safe manufacturing with a standard ESD control process.
(2) JEDEC document JEP157 states that 250-V CDM allows safe manufacturing with a standard ESD control process.

7.3 Recommended Operating Conditions

			MIN	NOM	MAX	UNIT
V_{CC}	Supply voltage		4.5	5	5.5	V
V_{IH}	High-level input voltage (T1IN,T2IN)		2			V
V_{IL}	Low-level input voltage (T1IN, T2IN)				0.8	V
R1IN, R2IN	Receiver input voltage				±30	V
T_A	Operating free-air temperature	MAX232	0		70	°C
		MAX232I	–40		85	

7.4 Thermal Information

THERMAL METRIC[1]		MAX232xD	MAX232xDW	MAX232xN	MAX232xNS	UNIT
		SOIC	SOIC wide	PDIP	SOP	
		16 PINS	16 PINS	16 PINS	16 PINS	
$R_{\theta JA}$	Junction-to-ambient thermal resistance	73	57	67	64	°C/W

(1) For more information about traditional and new thermal metrics, see the *IC Package Thermal Metrics* application report (SPRA953).

7.5 Electrical Characteristics –– Device

over recommended ranges of supply voltage and operating free-air temperature (unless otherwise noted) (see Figure 6)

PARAMETER		TEST CONDITIONS[1]	MIN	TYP[2]	MAX	UNIT
I_{CC}	Supply current	V_{CC} = 5.5V, all outputs open, T_A = 25°C		8	10	mA

(1) Test conditions are C1–C4 = 1 µF at V_{CC} = 5 V ± 0.5 V
(2) All typical values are at V_{CC} = 5 V, and T_A = 25°C.

Copyright © 1989–2014, Texas Instruments Incorporated

7.6 Electrical Characteristics –– Driver

over recommended ranges of supply voltage and operating free-air temperature (unless otherwise noted)

PARAMETER			TEST CONDITIONS(1)	MIN	TYP(2)	MAX	UNIT
V_{OH}	High-level output voltage	T1OUT, T2OUT	R_L = 3 kΩ to GND	5	7		V
V_{OL}	Low-level output voltage(3)	T1OUT, T2OUT	R_L = 3 kΩ to GND		–7	–5	V
r_O	Output resistance	T1OUT, T2OUT	$V_{S+} = V_{S-} = 0$, V_O = ±2 V	300			Ω
I_{OS}(4)	Short-circuit output current	T1OUT, T2OUT	V_{CC} = 5.5 V, V_O = 0 V		±10		mA
I_{IS}	Short-circuit input current	T1IN, T2IN	V_I = 0			200	µA

(1) Test conditions are C1–C4 = 1 µF at V_{CC} = 5 V ± 0.5 V
(2) All typical values are at V_{CC} = 5 V, T_A = 25°C.
(3) The algebraic convention, in which the least-positive (most negative) value is designated minimum, is used in this data sheet for logic voltage levels only.
(4) Not more than one output should be shorted at a time.

7.7 Electrical Characteristics –– Receiver

over recommended ranges of supply voltage and operating free-air temperature (unless otherwise noted)

PARAMETER			TEST CONDITIONS(1)	MIN	TYP(2)	MAX	UNIT
V_{OH}	High-level output voltage	R1OUT, R2OUT	I_{OH} = –1 mA	3.5			V
V_{OL}	Low-level output voltage(3)	R1OUT, R2OUT	I_{OL} = 3.2 mA			0.4	V
V_{IT+}	Receiver positive-going input threshold voltage	R1IN, R2IN	V_{CC} = 5 V, T_A = 25°C		1.7	2.4	V
V_{IT-}	Receiver negative-going input threshold voltage	R1IN, R2IN	V_{CC} = 5 V, T_A = 25°C	0.8	1.2		V
V_{hys}	Input hysteresis voltage	R1IN, R2IN	V_{CC} = 5 V	0.2	0.5	1	V
r_I	Receiver input resistance	R1IN, R2IN	V_{CC} = 5 V, T_A = 25°C	3	5	7	kΩ

(1) Test conditions are C1–C4 = 1 µF at V_{CC} = 5 V ± 0.5 V.
(2) All typical values are at V_{CC} = 5 V, T_A = 25°C.
(3) The algebraic convention, in which the least-positive (most negative) value is designated minimum, is used in this data sheet for logic voltage levels only.

7.8 Switching Characteristics

over recommended ranges of supply voltage and operating free-air temperature (unless otherwise noted)

PARAMETER		TEST CONDITIONS(1)	MIN	TYP(1)	MAX	UNIT
SR	Driver slew rate	RL = 3 kΩ to 7 kΩ, see Figure 4			30	V/µs
SR(t)	Driver transition region slew rate	see Figure 5		3		V/µs
	Data rate	One TOUT switching		120		kbit/s
$t_{PLH®)}$	Receiver propagation delay time, low- to high-level output	TTL load, see Figure 3		500		ns
$t_{PHL®)}$	Receiver propagation delay time, high- to low-level output	TTL load, see Figure 3		500		ns

(1) Test conditions are C1–C4 = 1 µF at V_{CC} = 5 V ± 0.5 V.

Copyright © 1989–2014, Texas Instruments Incorporated

7.9 Typical Characteristics

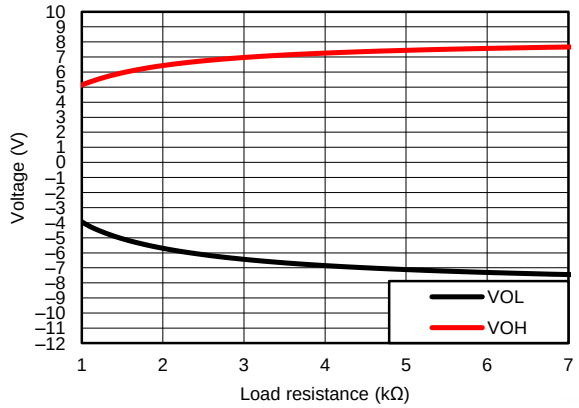

Figure 1. TOUT VOH & VOL vs Load Resistance, Both Drivers Loaded

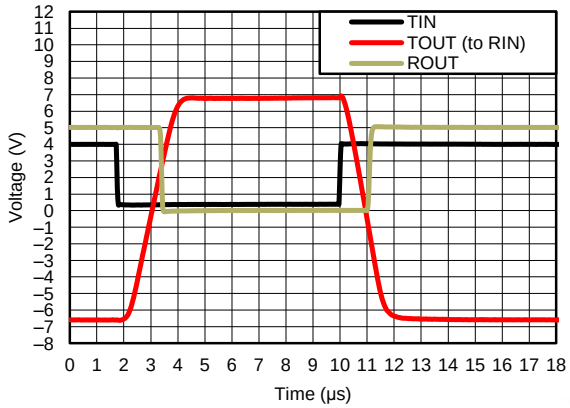

Figure 2. Driver to Receiver Loopback Timing Waveform

Copyright © 1989–2014, Texas Instruments Incorporated

8 Parameter Measurement Information

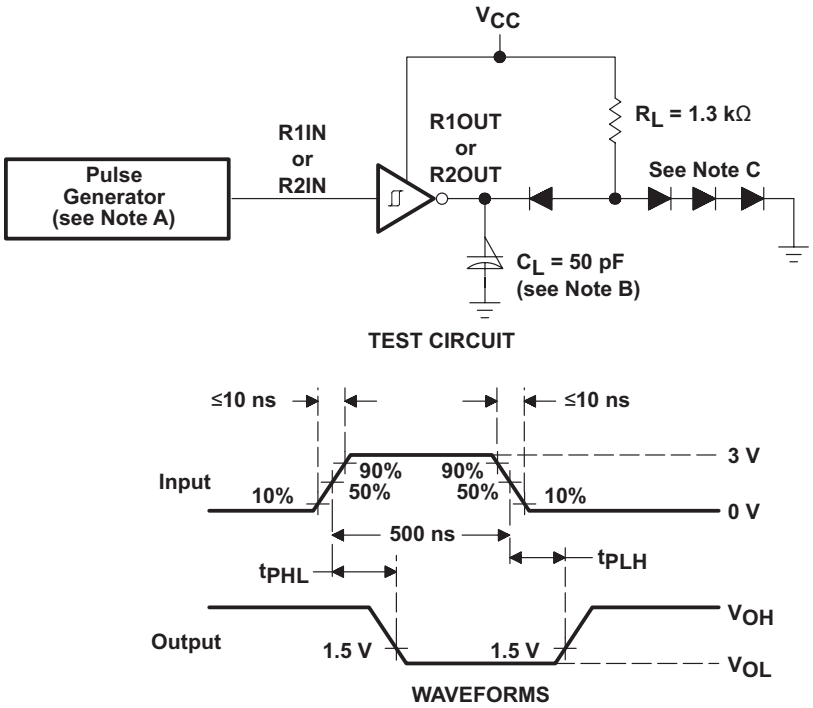

A. The pulse generator has the following characteristics: Z_O = 50 Ω, duty cycle ≤ 50%.

B. C_L includes probe and jig capacitance.

C. All diodes are 1N3064 or equivalent.

Figure 3. Receiver Test Circuit and Waveforms for t_{PHL} and t_{PLH} Measurements

Parameter Measurement Information (continued)

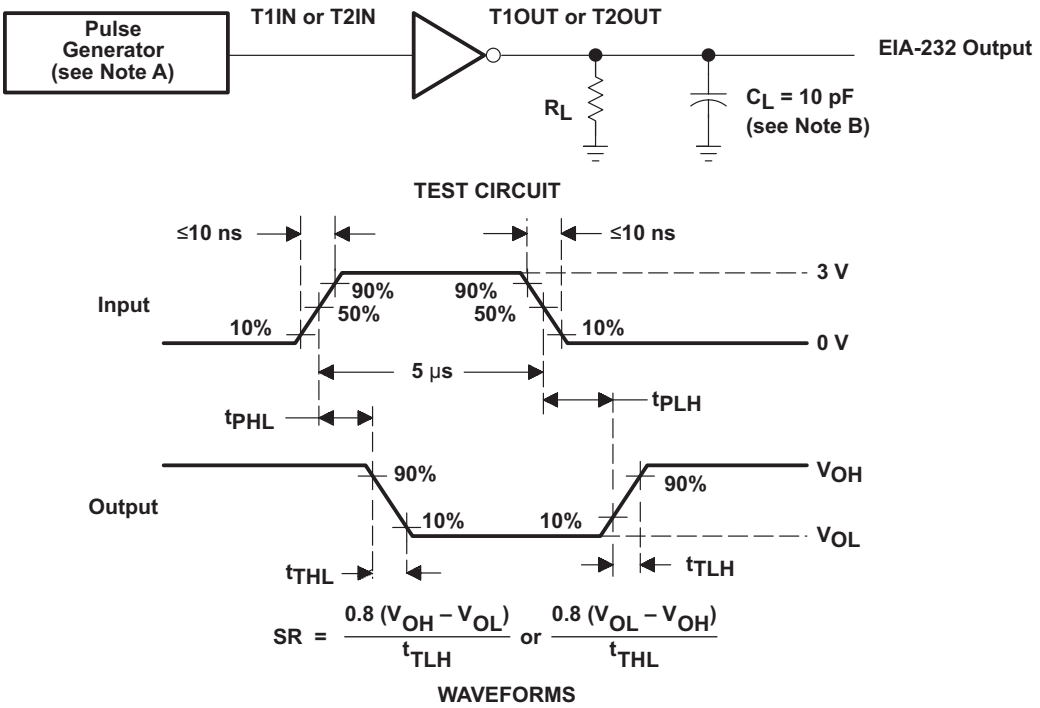

A. The pulse generator has the following characteristics: Z_O = 50 Ω, duty cycle ≤ 50%.

B. C_L includes probe and jig capacitance.

Figure 4. Driver Test Circuit and Waveforms for t_{PHL} and t_{PLH} Measurements (5-µs Input)

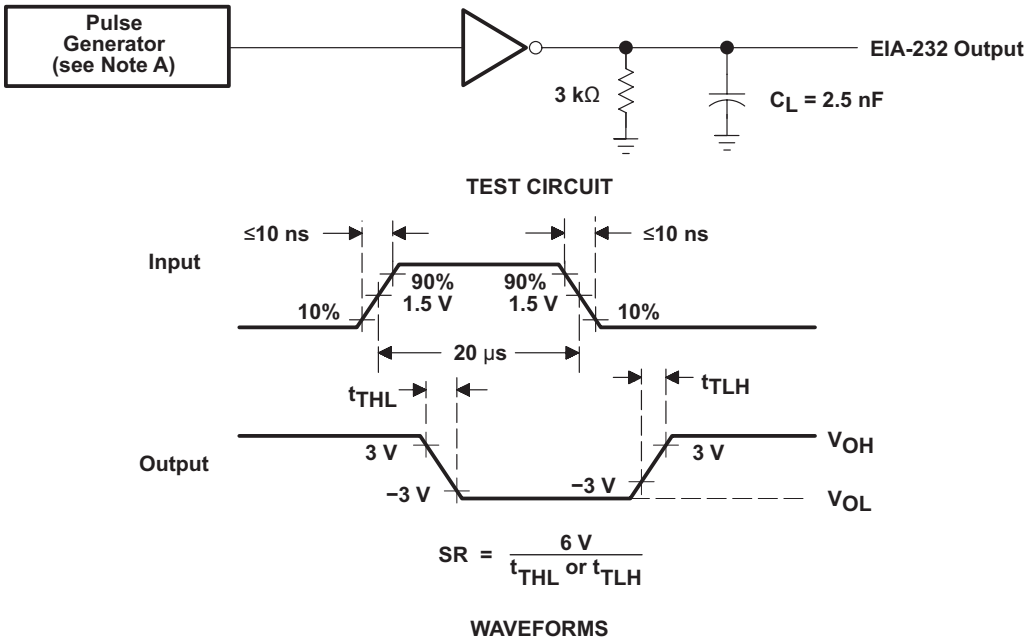

A. The pulse generator has the following characteristics: Z_O = 50 Ω, duty cycle ≤ 50%.

Figure 5. Test Circuit and Waveforms for t_{THL} and t_{TLH} Measurements (20-µs Input)

Copyright © 1989–2014, Texas Instruments Incorporated

9 Detailed Description

9.1 Overview

The MAX232 device is a dual driver/receiver that includes a capacitive voltage generator using four capacitors to supply TIA/EIA-232-F voltage levels from a single 5-V supply. Each receiver converts TIA/EIA-232-F inputs to 5-V TTL/CMOS levels. These receivers have a typical threshold of 1.3 V, a typical hysteresis of 0.5 V, and can accept ±30-V inputs. Each driver converts TTL/CMOS input levels into TIA/EIA-232-F levels. The driver, receiver, and voltage-generator functions are available as cells in the Texas Instruments LinASIC™ library. Outputs are protected against shorts to ground.

9.2 Functional Block Diagram

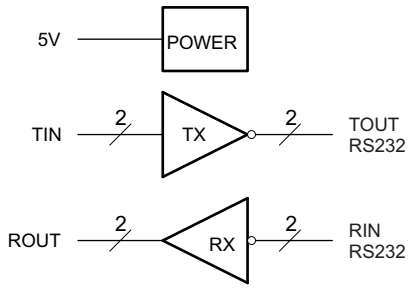

9.3 Feature Description

9.3.1 Power

The power block increases and inverts the 5V supply for the RS232 driver using a charge pump that requires four 1-µF external capacitors.

9.3.2 RS232 Driver

Two drivers interface standard logic level to RS232 levels. Internal pull up resistors on TIN inputs ensures a high input when the line is high impedance.

9.3.3 RS232 Receiver

Two receivers interface RS232 levels to standard logic levels. An open input will result in a high output on ROUT.

9.4 Device Functional Modes

9.4.1 V_{CC} powered by 5V

The device will be in normal operation.

9.4.2 V_{CC} unpowered

When MAX232 is unpowered, it can be safely connected to an active remote RS232 device.

Table 1. Function Table Each Driver(1)

INPUT TIN	OUTPUT TOUT
L	H
H	L

(1) H = high level, L = low level, X = irrelevant, Z = high impedance

Table 2. Function Table Each Receiver(1)

INPUTS RIN	OUTPUT ROUT
L	H
H	L
Open	H

(1) H = high level, L = low level, X = irrelevant, Z = high impedance (off), Open = disconnected input or connected driver off

10 Application and Implementation

NOTE

Information in the following applications sections is not part of the TI component specification, and TI does not warrant its accuracy or completeness. TI's customers are responsible for determining suitability of components for their purposes. Customers should validate and test their design implementation to confirm system functionality.

10.1 Application Information

For proper operation add capacitors as shown in Figure 6. Pins 9 through 12 connect to UART or general purpose logic lines. EIA-232 lines will connect to a connector or cable.

10.2 Typical Application

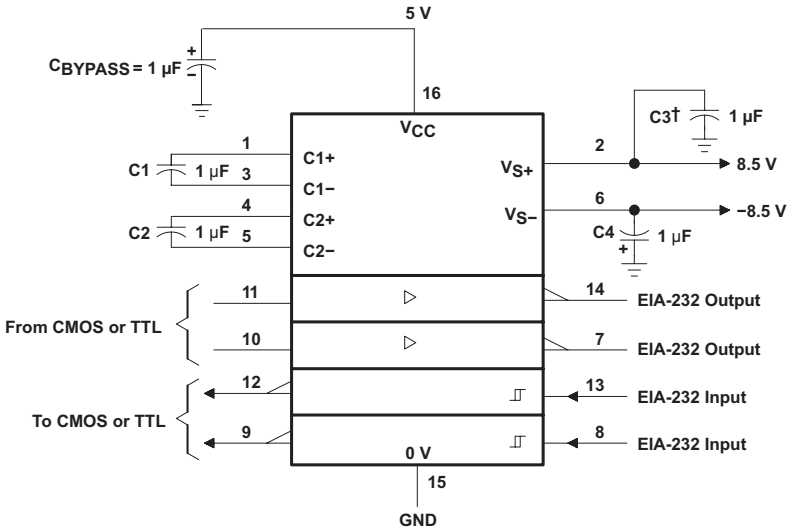

† C3 can be connected to V_{CC} or GND.

NOTES: A. Resistor values shown are nominal.
B. Nonpolarized ceramic capacitors are acceptable. If polarized tantalum or electrolytic capacitors are used, they should be connected as shown. In addition to the 1-µF capacitors shown, the MAX202 can operate with 0.1-µF capacitors.

Figure 6. Typical Operating Circuit

10.2.1 Design Requirements

- V_{CC} minimum is 4.5 V and maximum is 5.5 V.
- Maximum recommended bit rate is 120 kbps.

10.2.2 Detailed Design Procedure

Use 1 uF tantalum or ceramic capacitors.

Copyright © 1989–2014, Texas Instruments Incorporated

Typical Application (continued)

10.2.3 Application Curves

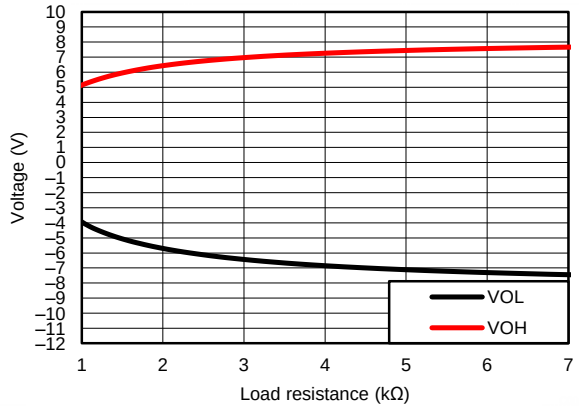

Figure 7. TOUT VOH & VOL vs Load Resistance, Both Drivers Loaded

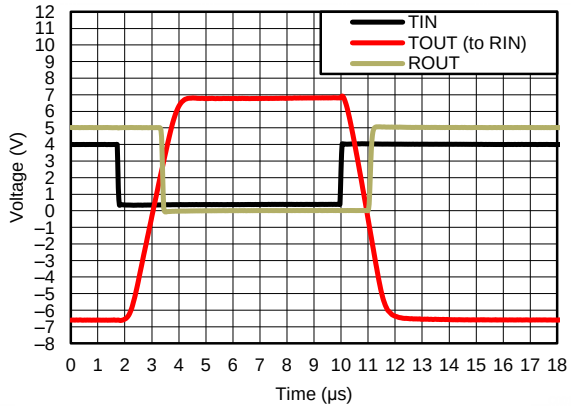

Figure 8. Driver to Receiver Loopback Timing Waveform

11 Power Supply Recommendations

The V_{CC} voltage should be connected to the same power source used for logic device connected to TIN pins. V_{CC} should be between 4.5V and 5.5V.

12 Layout

12.1 Layout Guidelines

Keep the external capacitor traces short. This is more important on C1 and C2 nodes that have the fastest rise and fall times.

12.2 Layout Example

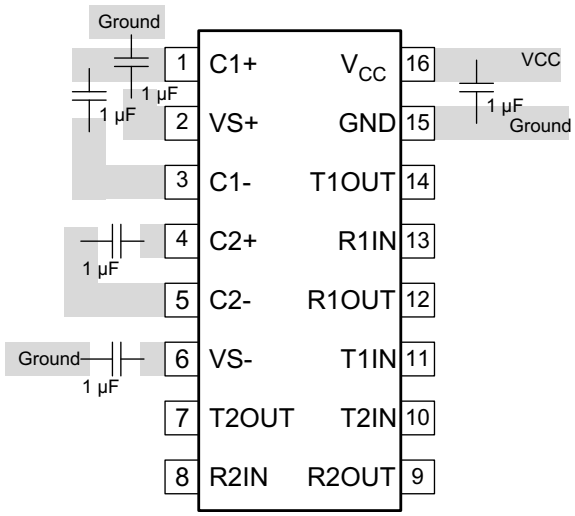

Figure 9. Layout Schematic

13 Device and Documentation Support

13.1 Related Links

The table below lists quick access links. Categories include technical documents, support and community resources, tools and software, and quick access to sample or buy.

Table 3. Related Links

PARTS	PRODUCT FOLDER	SAMPLE & BUY	TECHNICAL DOCUMENTS	TOOLS & SOFTWARE	SUPPORT & COMMUNITY
MAX232	Click here	Click here	Click here	Click here	Click here
MAX232I	Click here	Click here	Click here	Click here	Click here

13.2 Trademarks

All trademarks are the property of their respective owners.

13.3 Electrostatic Discharge Caution

These devices have limited built-in ESD protection. The leads should be shorted together or the device placed in conductive foam during storage or handling to prevent electrostatic damage to the MOS gates.

13.4 Glossary

SLYZ022 — *TI Glossary.*

This glossary lists and explains terms, acronyms and definitions.

14 Mechanical, Packaging, and Orderable Information

The following pages include mechanical packaging and orderable information. This information is the most current data available for the designated devices. This data is subject to change without notice and revision of this document. For browser based versions of this data sheet, refer to the left hand navigation.

Copyright © 1989–2014, Texas Instruments Incorporated

PACKAGING INFORMATION

Orderable Device	Status (1)	Package Type	Package Drawing	Pins	Package Qty	Eco Plan (2)	Lead/Ball Finish (6)	MSL Peak Temp (3)	Op Temp (°C)	Device Marking (4/5)	Samples
MAX232D	ACTIVE	SOIC	D	16	40	Green (RoHS & no Sb/Br)	CU NIPDAU	Level-1-260C-UNLIM	0 to 70	MAX232	Samples
MAX232DE4	ACTIVE	SOIC	D	16	40	Green (RoHS & no Sb/Br)	CU NIPDAU	Level-1-260C-UNLIM	0 to 70	MAX232	Samples
MAX232DG4	ACTIVE	SOIC	D	16	40	Green (RoHS & no Sb/Br)	CU NIPDAU	Level-1-260C-UNLIM	0 to 70	MAX232	Samples
MAX232DR	ACTIVE	SOIC	D	16	2500	Green (RoHS & no Sb/Br)	CU NIPDAU | CU SN	Level-1-260C-UNLIM	0 to 70	MAX232	Samples
MAX232DRE4	ACTIVE	SOIC	D	16	2500	Green (RoHS & no Sb/Br)	CU NIPDAU	Level-1-260C-UNLIM	0 to 70	MAX232	Samples
MAX232DRG4	ACTIVE	SOIC	D	16	2500	Green (RoHS & no Sb/Br)	CU NIPDAU	Level-1-260C-UNLIM	0 to 70	MAX232	Samples
MAX232DW	ACTIVE	SOIC	DW	16	40	Green (RoHS & no Sb/Br)	CU NIPDAU	Level-1-260C-UNLIM	0 to 70	MAX232	Samples
MAX232DWE4	ACTIVE	SOIC	DW	16	40	Green (RoHS & no Sb/Br)	CU NIPDAU	Level-1-260C-UNLIM	0 to 70	MAX232	Samples
MAX232DWG4	ACTIVE	SOIC	DW	16	40	Green (RoHS & no Sb/Br)	CU NIPDAU	Level-1-260C-UNLIM	0 to 70	MAX232	Samples
MAX232DWR	ACTIVE	SOIC	DW	16	2000	Green (RoHS & no Sb/Br)	CU NIPDAU	Level-1-260C-UNLIM	0 to 70	MAX232	Samples
MAX232DWRE4	ACTIVE	SOIC	DW	16	2000	Green (RoHS & no Sb/Br)	CU NIPDAU	Level-1-260C-UNLIM	0 to 70	MAX232	Samples
MAX232DWRG4	ACTIVE	SOIC	DW	16	2000	Green (RoHS & no Sb/Br)	CU NIPDAU	Level-1-260C-UNLIM	0 to 70	MAX232	Samples
MAX232ID	ACTIVE	SOIC	D	16	40	Green (RoHS & no Sb/Br)	CU NIPDAU	Level-1-260C-UNLIM	-40 to 85	MAX232I	Samples
MAX232IDE4	ACTIVE	SOIC	D	16	40	Green (RoHS & no Sb/Br)	CU NIPDAU	Level-1-260C-UNLIM	-40 to 85	MAX232I	Samples
MAX232IDG4	ACTIVE	SOIC	D	16	40	Green (RoHS & no Sb/Br)	CU NIPDAU	Level-1-260C-UNLIM	-40 to 85	MAX232I	Samples
MAX232IDR	ACTIVE	SOIC	D	16	2500	Green (RoHS & no Sb/Br)	CU NIPDAU	Level-1-260C-UNLIM	-40 to 85	MAX232I	Samples
MAX232IDRG4	ACTIVE	SOIC	D	16	2500	Green (RoHS & no Sb/Br)	CU NIPDAU	Level-1-260C-UNLIM	-40 to 85	MAX232I	Samples

Orderable Device	Status (1)	Package Type	Package Drawing	Pins	Package Qty	Eco Plan (2)	Lead/Ball Finish (6)	MSL Peak Temp (3)	Op Temp (°C)	Device Marking (4/5)	Samples
MAX232IDW	ACTIVE	SOIC	DW	16	40	Green (RoHS & no Sb/Br)	CU NIPDAU	Level-1-260C-UNLIM	-40 to 85	MAX232I	Samples
MAX232IDWG4	ACTIVE	SOIC	DW	16	40	Green (RoHS & no Sb/Br)	CU NIPDAU	Level-1-260C-UNLIM	-40 to 85	MAX232I	Samples
MAX232IDWR	ACTIVE	SOIC	DW	16	2000	Green (RoHS & no Sb/Br)	CU NIPDAU	Level-1-260C-UNLIM	-40 to 85	MAX232I	Samples
MAX232IDWRE4	ACTIVE	SOIC	DW	16	2000	Green (RoHS & no Sb/Br)	CU NIPDAU	Level-1-260C-UNLIM	-40 to 85	MAX232I	Samples
MAX232IDWRG4	ACTIVE	SOIC	DW	16	2000	Green (RoHS & no Sb/Br)	CU NIPDAU	Level-1-260C-UNLIM	-40 to 85	MAX232I	Samples
MAX232IN	ACTIVE	PDIP	N	16	25	Pb-Free (RoHS)	CU NIPDAU	N / A for Pkg Type	-40 to 85	MAX232IN	Samples
MAX232INE4	ACTIVE	PDIP	N	16	25	Pb-Free (RoHS)	CU NIPDAU	N / A for Pkg Type	-40 to 85	MAX232IN	Samples
MAX232N	ACTIVE	PDIP	N	16	25	Pb-Free (RoHS)	CU NIPDAU	N / A for Pkg Type	0 to 70	MAX232N	Samples
MAX232NE4	ACTIVE	PDIP	N	16	25	Pb-Free (RoHS)	CU NIPDAU	N / A for Pkg Type	0 to 70	MAX232N	Samples
MAX232NSR	ACTIVE	SO	NS	16	2000	Green (RoHS & no Sb/Br)	CU NIPDAU	Level-1-260C-UNLIM	0 to 70	MAX232	Samples

(1) The marketing status values are defined as follows:
ACTIVE: Product device recommended for new designs.
LIFEBUY: TI has announced that the device will be discontinued, and a lifetime-buy period is in effect.
NRND: Not recommended for new designs. Device is in production to support existing customers, but TI does not recommend using this part in a new design.
PREVIEW: Device has been announced but is not in production. Samples may or may not be available.
OBSOLETE: TI has discontinued the production of the device.

(2) Eco Plan - The planned eco-friendly classification: Pb-Free (RoHS), Pb-Free (RoHS Exempt), or Green (RoHS & no Sb/Br) - please check http://www.ti.com/productcontent for the latest availability information and additional product content details.
TBD: The Pb-Free/Green conversion plan has not been defined.
Pb-Free (RoHS): TI's terms "Lead-Free" or "Pb-Free" mean semiconductor products that are compatible with the current RoHS requirements for all 6 substances, including the requirement that lead not exceed 0.1% by weight in homogeneous materials. Where designed to be soldered at high temperatures, TI Pb-Free products are suitable for use in specified lead-free processes.
Pb-Free (RoHS Exempt): This component has a RoHS exemption for either 1) lead-based flip-chip solder bumps used between the die and package, or 2) lead-based die adhesive used between the die and leadframe. The component is otherwise considered Pb-Free (RoHS compatible) as defined above.
Green (RoHS & no Sb/Br): TI defines "Green" to mean Pb-Free (RoHS compatible), and free of Bromine (Br) and Antimony (Sb) based flame retardants (Br or Sb do not exceed 0.1% by weight in homogeneous material)

(3) MSL, Peak Temp. - The Moisture Sensitivity Level rating according to the JEDEC industry standard classifications, and peak solder temperature.

(4) There may be additional marking, which relates to the logo, the lot trace code information, or the environmental category on the device.

(5) Multiple Device Markings will be inside parentheses. Only one Device Marking contained in parentheses and separated by a "~" will appear on a device. If a line is indented then it is a continuation of the previous line and the two combined represent the entire Device Marking for that device.

(6) Lead/Ball Finish - Orderable Devices may have multiple material finish options. Finish options are separated by a vertical ruled line. Lead/Ball Finish values may wrap to two lines if the finish value exceeds the maximum column width.

Important Information and Disclaimer: The information provided on this page represents TI's knowledge and belief as of the date that it is provided. TI bases its knowledge and belief on information provided by third parties, and makes no representation or warranty as to the accuracy of such information. Efforts are underway to better integrate information from third parties. TI has taken and continues to take reasonable steps to provide representative and accurate information but may not have conducted destructive testing or chemical analysis on incoming materials and chemicals. TI and TI suppliers consider certain information to be proprietary, and thus CAS numbers and other limited information may not be available for release.

In no event shall TI's liability arising out of such information exceed the total purchase price of the TI part(s) at issue in this document sold by TI to Customer on an annual basis.

TAPE AND REEL INFORMATION

REEL DIMENSIONS

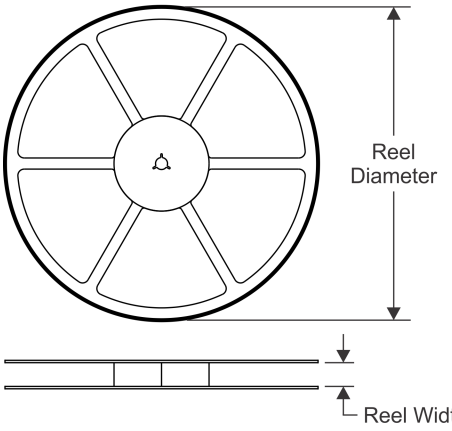

TAPE DIMENSIONS

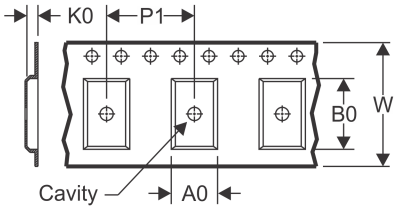

A0	Dimension designed to accommodate the component width
B0	Dimension designed to accommodate the component length
K0	Dimension designed to accommodate the component thickness
W	Overall width of the carrier tape
P1	Pitch between successive cavity centers

QUADRANT ASSIGNMENTS FOR PIN 1 ORIENTATION IN TAPE

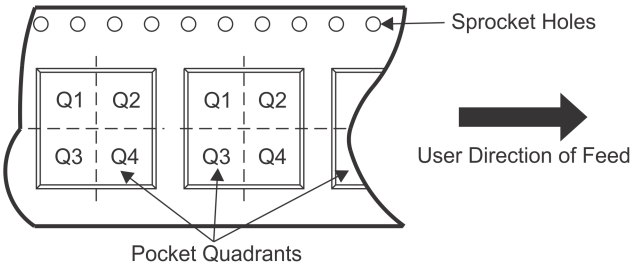

*All dimensions are nominal

Device	Package Type	Package Drawing	Pins	SPQ	Reel Diameter (mm)	Reel Width W1 (mm)	A0 (mm)	B0 (mm)	K0 (mm)	P1 (mm)	W (mm)	Pin1 Quadrant
MAX232DR	SOIC	D	16	2500	330.0	16.4	6.5	10.3	2.1	8.0	16.0	Q1
MAX232DR	SOIC	D	16	2500	330.0	16.4	6.5	10.3	2.1	8.0	16.0	Q1
MAX232DRG4	SOIC	D	16	2500	330.0	16.4	6.5	10.3	2.1	8.0	16.0	Q1
MAX232DRG4	SOIC	D	16	2500	330.0	16.4	6.5	10.3	2.1	8.0	16.0	Q1
MAX232DWR	SOIC	DW	16	2000	330.0	16.4	10.75	10.7	2.7	12.0	16.0	Q1
MAX232DWRG4	SOIC	DW	16	2000	330.0	16.4	10.75	10.7	2.7	12.0	16.0	Q1
MAX232IDR	SOIC	D	16	2500	330.0	16.4	6.5	10.3	2.1	8.0	16.0	Q1
MAX232IDWR	SOIC	DW	16	2000	330.0	16.4	10.75	10.7	2.7	12.0	16.0	Q1
MAX232IDWRG4	SOIC	DW	16	2000	330.0	16.4	10.75	10.7	2.7	12.0	16.0	Q1

TAPE AND REEL BOX DIMENSIONS

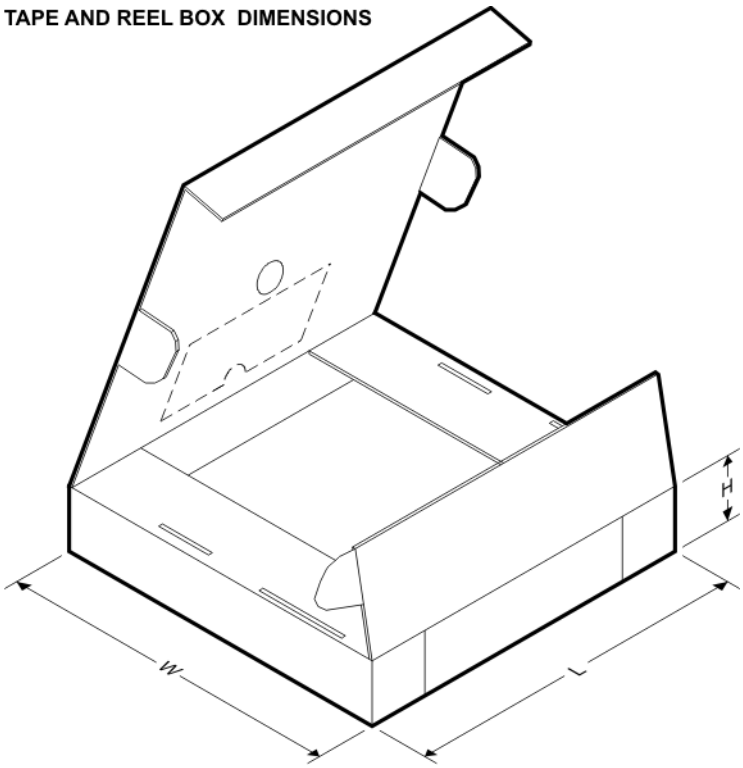

*All dimensions are nominal

Device	Package Type	Package Drawing	Pins	SPQ	Length (mm)	Width (mm)	Height (mm)
MAX232DR	SOIC	D	16	2500	333.2	345.9	28.6
MAX232DR	SOIC	D	16	2500	367.0	367.0	38.0
MAX232DRG4	SOIC	D	16	2500	333.2	345.9	28.6
MAX232DRG4	SOIC	D	16	2500	367.0	367.0	38.0
MAX232DWR	SOIC	DW	16	2000	367.0	367.0	38.0
MAX232DWRG4	SOIC	DW	16	2000	367.0	367.0	38.0
MAX232IDR	SOIC	D	16	2500	333.2	345.9	28.6
MAX232IDWR	SOIC	DW	16	2000	367.0	367.0	38.0
MAX232IDWRG4	SOIC	DW	16	2000	367.0	367.0	38.0

N (R–PDIP–T**) PLASTIC DUAL–IN–LINE PACKAGE

16 PINS SHOWN

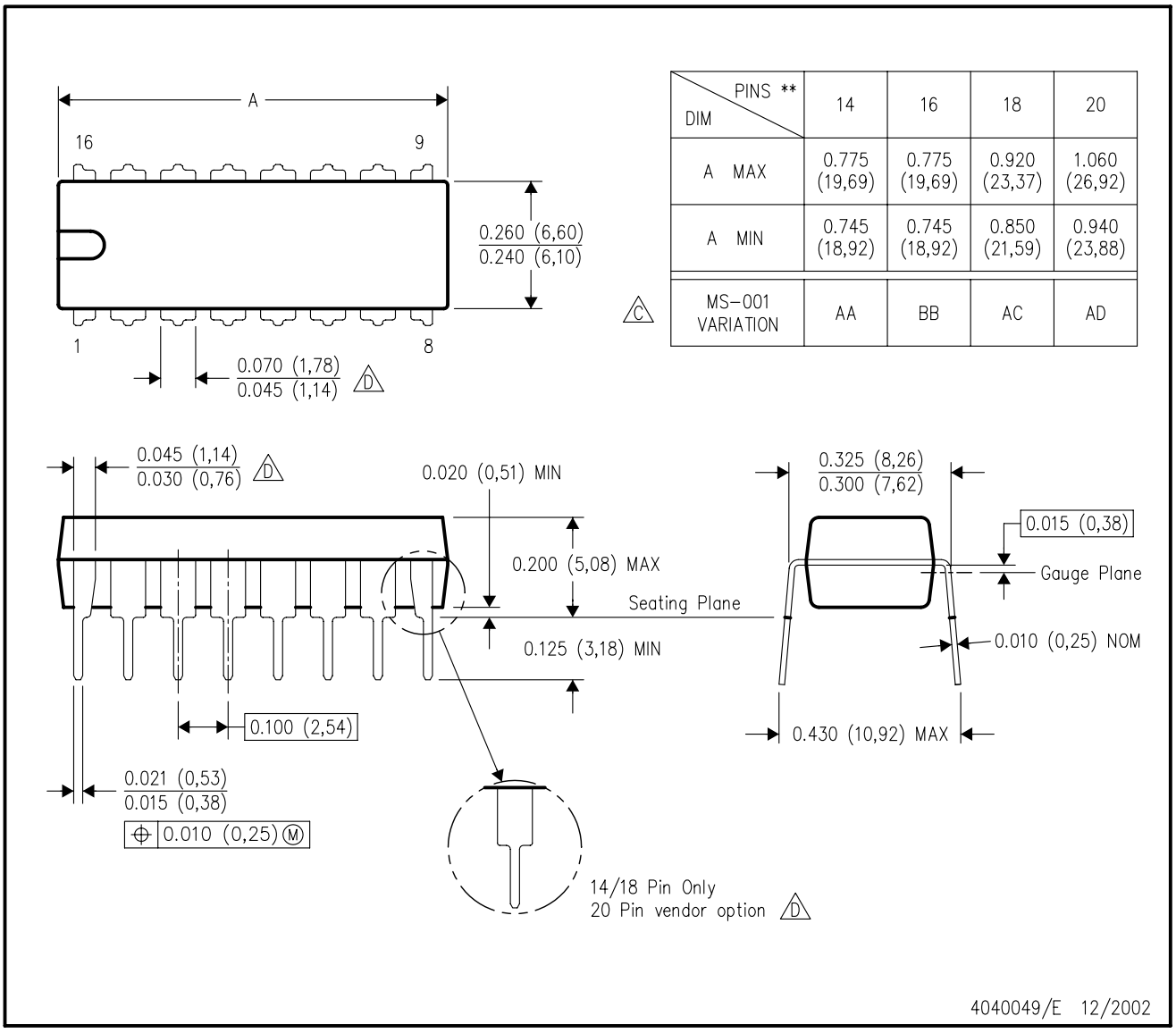

DIM \ PINS **	14	16	18	20
A MAX	0.775 (19,69)	0.775 (19,69)	0.920 (23,37)	1.060 (26,92)
A MIN	0.745 (18,92)	0.745 (18,92)	0.850 (21,59)	0.940 (23,88)
MS–001 VARIATION (C)	AA	BB	AC	AD

NOTES:
A. All linear dimensions are in inches (millimeters).
B. This drawing is subject to change without notice.
C. Falls within JEDEC MS–001, except 18 and 20 pin minimum body length (Dim A).
D. The 20 pin end lead shoulder width is a vendor option, either half or full width.

D (R–PDSO–G16) PLASTIC SMALL OUTLINE

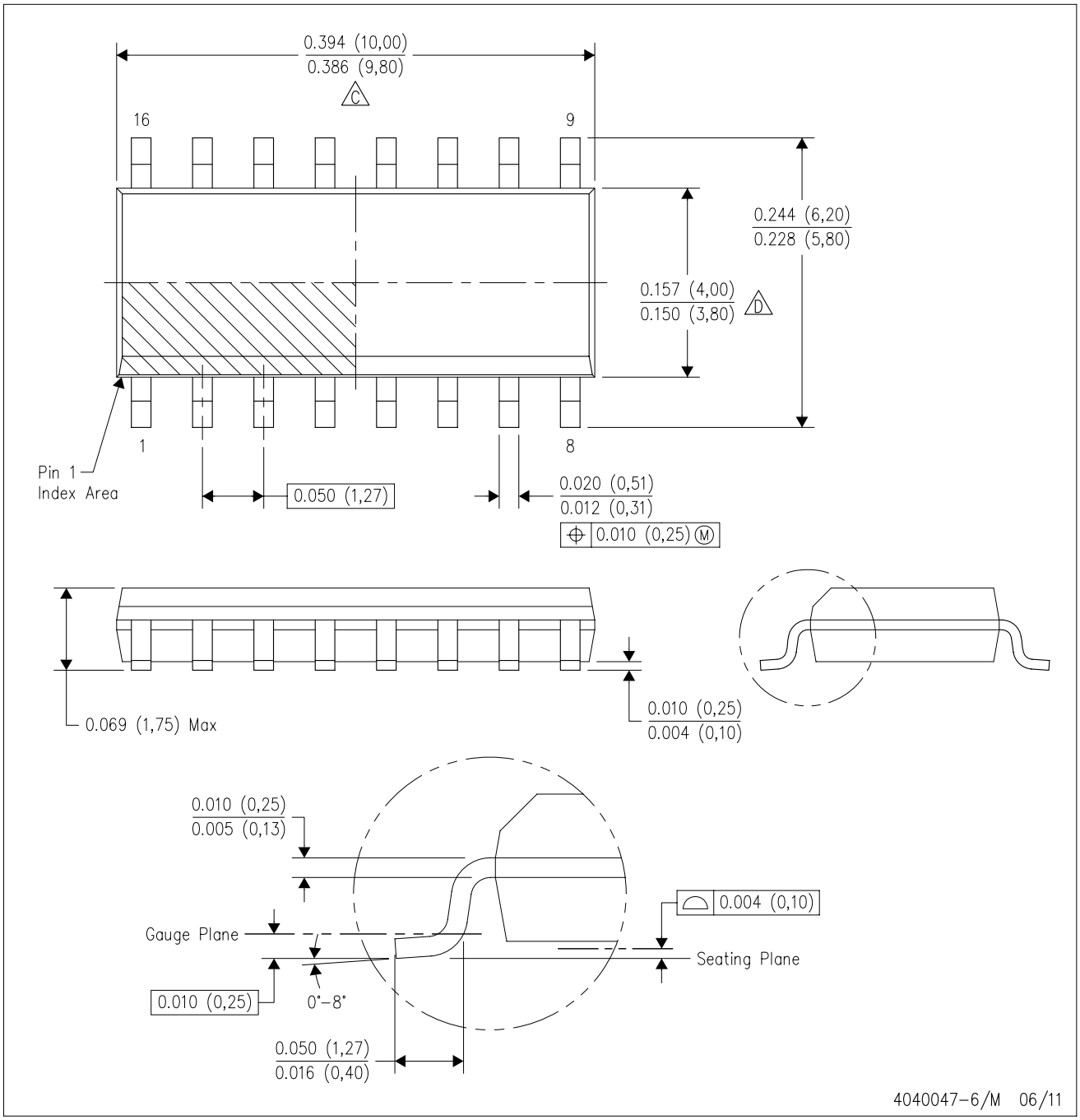

NOTES:
A. All linear dimensions are in inches (millimeters).
B. This drawing is subject to change without notice.
C. Body length does not include mold flash, protrusions, or gate burrs. Mold flash, protrusions, or gate burrs shall not exceed 0.006 (0,15) each side.
D. Body width does not include interlead flash. Interlead flash shall not exceed 0.017 (0,43) each side.
E. Reference JEDEC MS–012 variation AC.

D (R–PDSO–G16) PLASTIC SMALL OUTLINE

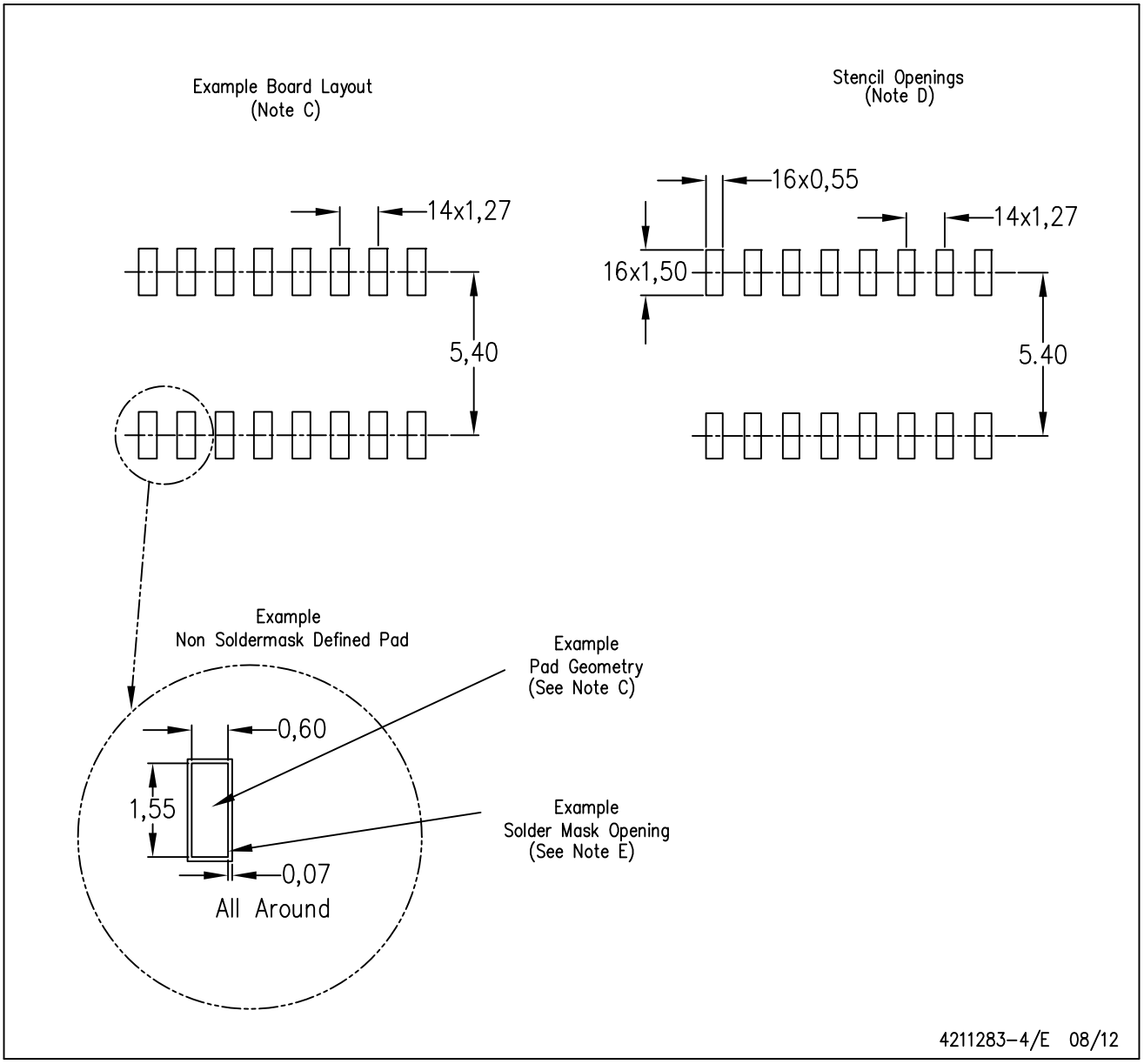

NOTES:
A. All linear dimensions are in millimeters.
B. This drawing is subject to change without notice.
C. Publication IPC–7351 is recommended for alternate designs.
D. Laser cutting apertures with trapezoidal walls and also rounding corners will offer better paste release. Customers should contact their board assembly site for stencil design recommendations. Refer to IPC–7525 for other stencil recommendations.
E. Customers should contact their board fabrication site for solder mask tolerances between and around signal pads.

DW (R–PDSO–G16) PLASTIC SMALL OUTLINE

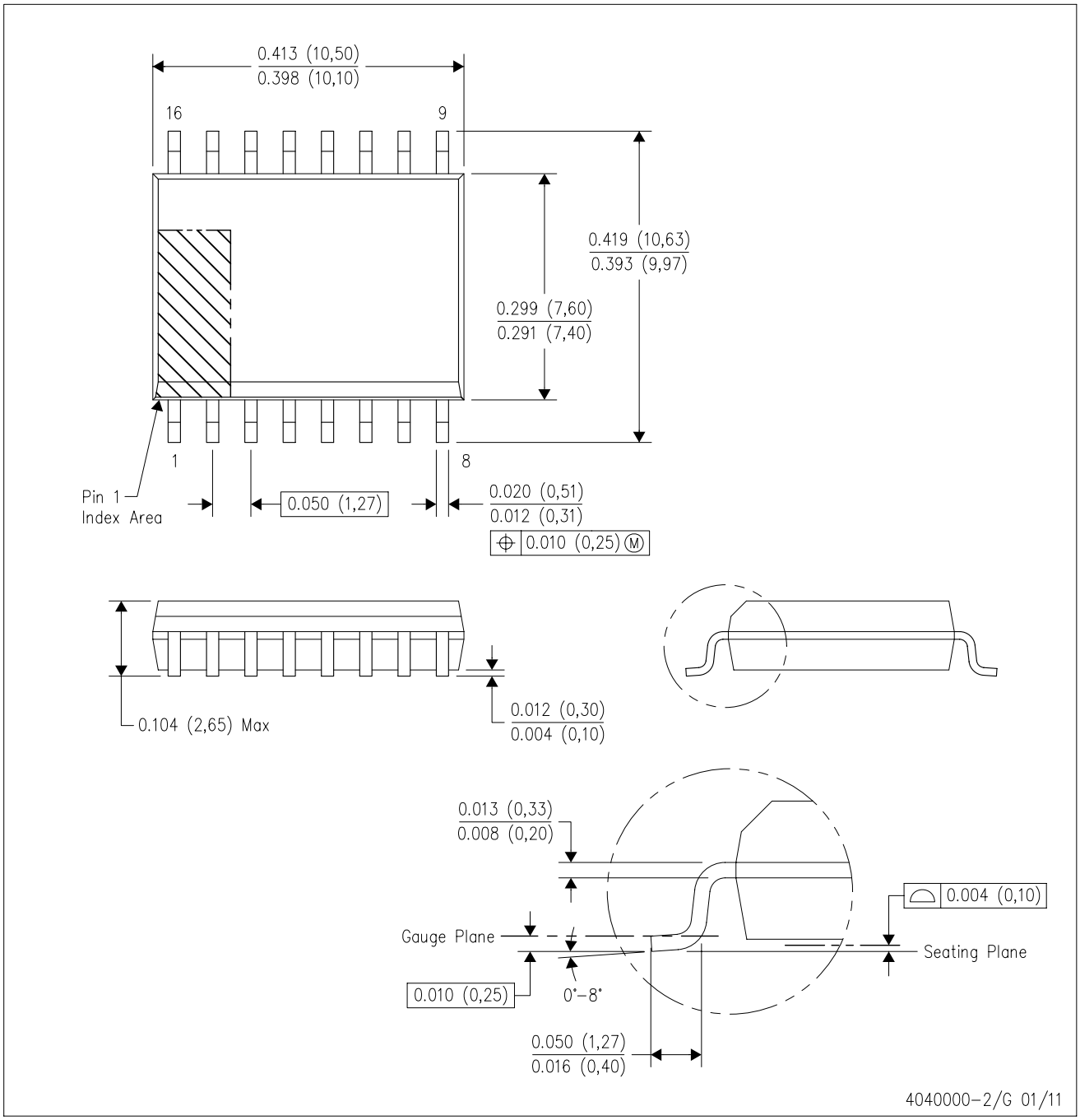

NOTES:
A. All linear dimensions are in inches (millimeters). Dimensioning and tolerancing per ASME Y14.5M–1994.
B. This drawing is subject to change without notice.
C. Body dimensions do not include mold flash or protrusion not to exceed 0.006 (0,15).
D. Falls within JEDEC MS–013 variation AA.

MECHANICAL DATA

NS (R-PDSO-G)** **PLASTIC SMALL-OUTLINE PACKAGE**

14-PINS SHOWN

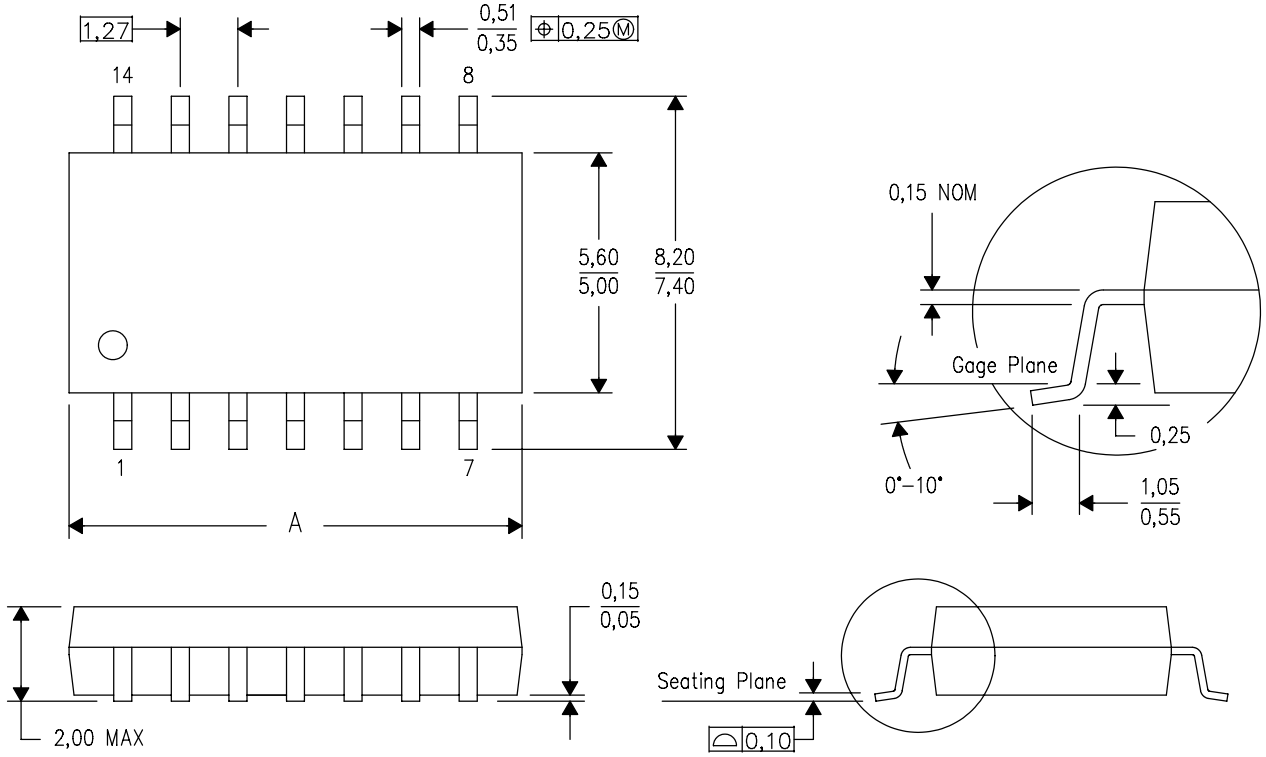

DIM \ PINS **	14	16	20	24
A MAX	10,50	10,50	12,90	15,30
A MIN	9,90	9,90	12,30	14,70

4040062/C 03/03

NOTES:
A. All linear dimensions are in millimeters.
B. This drawing is subject to change without notice.
C. Body dimensions do not include mold flash or protrusion, not to exceed 0,15.

IMPORTANT NOTICE

Texas Instruments Incorporated and its subsidiaries (TI) reserve the right to make corrections, enhancements, improvements and other changes to its semiconductor products and services per JESD46, latest issue, and to discontinue any product or service per JESD48, latest issue. Buyers should obtain the latest relevant information before placing orders and should verify that such information is current and complete. All semiconductor products (also referred to herein as “components”) are sold subject to TI’s terms and conditions of sale supplied at the time of order acknowledgment.

TI warrants performance of its components to the specifications applicable at the time of sale, in accordance with the warranty in TI’s terms and conditions of sale of semiconductor products. Testing and other quality control techniques are used to the extent TI deems necessary to support this warranty. Except where mandated by applicable law, testing of all parameters of each component is not necessarily performed.

TI assumes no liability for applications assistance or the design of Buyers’ products. Buyers are responsible for their products and applications using TI components. To minimize the risks associated with Buyers’ products and applications, Buyers should provide adequate design and operating safeguards.

TI does not warrant or represent that any license, either express or implied, is granted under any patent right, copyright, mask work right, or other intellectual property right relating to any combination, machine, or process in which TI components or services are used. Information published by TI regarding third-party products or services does not constitute a license to use such products or services or a warranty or endorsement thereof. Use of such information may require a license from a third party under the patents or other intellectual property of the third party, or a license from TI under the patents or other intellectual property of TI.

Reproduction of significant portions of TI information in TI data books or data sheets is permissible only if reproduction is without alteration and is accompanied by all associated warranties, conditions, limitations, and notices. TI is not responsible or liable for such altered documentation. Information of third parties may be subject to additional restrictions.

Resale of TI components or services with statements different from or beyond the parameters stated by TI for that component or service voids all express and any implied warranties for the associated TI component or service and is an unfair and deceptive business practice. TI is not responsible or liable for any such statements.

Buyer acknowledges and agrees that it is solely responsible for compliance with all legal, regulatory and safety-related requirements concerning its products, and any use of TI components in its applications, notwithstanding any applications-related information or support that may be provided by TI. Buyer represents and agrees that it has all the necessary expertise to create and implement safeguards which anticipate dangerous consequences of failures, monitor failures and their consequences, lessen the likelihood of failures that might cause harm and take appropriate remedial actions. Buyer will fully indemnify TI and its representatives against any damages arising out of the use of any TI components in safety-critical applications.

In some cases, TI components may be promoted specifically to facilitate safety-related applications. With such components, TI’s goal is to help enable customers to design and create their own end-product solutions that meet applicable functional safety standards and requirements. Nonetheless, such components are subject to these terms.

No TI components are authorized for use in FDA Class III (or similar life-critical medical equipment) unless authorized officers of the parties have executed a special agreement specifically governing such use.

Only those TI components which TI has specifically designated as military grade or “enhanced plastic” are designed and intended for use in military/aerospace applications or environments. Buyer acknowledges and agrees that any military or aerospace use of TI components which have ***not*** been so designated is solely at the Buyer's risk, and that Buyer is solely responsible for compliance with all legal and regulatory requirements in connection with such use.

TI has specifically designated certain components as meeting ISO/TS16949 requirements, mainly for automotive use. In any case of use of non-designated products, TI will not be responsible for any failure to meet ISO/TS16949.

Products		**Applications**	
Audio	www.ti.com/audio	Automotive and Transportation	www.ti.com/automotive
Amplifiers	amplifier.ti.com	Communications and Telecom	www.ti.com/communications
Data Converters	dataconverter.ti.com	Computers and Peripherals	www.ti.com/computers
DLP® Products	www.dlp.com	Consumer Electronics	www.ti.com/consumer-apps
DSP	dsp.ti.com	Energy and Lighting	www.ti.com/energy
Clocks and Timers	www.ti.com/clocks	Industrial	www.ti.com/industrial
Interface	interface.ti.com	Medical	www.ti.com/medical
Logic	logic.ti.com	Security	www.ti.com/security
Power Mgmt	power.ti.com	Space, Avionics and Defense	www.ti.com/space-avionics-defense
Microcontrollers	microcontroller.ti.com	Video and Imaging	www.ti.com/video
RFID	www.ti-rfid.com		
OMAP Applications Processors	www.ti.com/omap	**TI E2E Community**	e2e.ti.com
Wireless Connectivity	www.ti.com/wirelessconnectivity		

Mailing Address: Texas Instruments, Post Office Box 655303, Dallas, Texas 75265
Copyright © 2016, Texas Instruments Incorporated