Constructional Project

SIMPLE AUDIO CIRCUITS

Part 1 – Introduction and Power Amplifiers

RAYMOND HAIGH

A selection of "pic-n-mix" low-cost audio circuits – from preamplifier to speaker!

WHATEVER their particular area of interest, most electronics enthusiasts encounter the need to amplify and reproduce audio signals. The final stages of radio receivers, intercom units, security and surveillance installations, or just a hankering for a big sound from a Walkman or portable CD player, all involve audio amplification and a speaker system. And the amplification usually goes hand-in-hand with some form of signal processing.

Music reproduction calls for a wide frequency response and tone-control circuitry. Speech communication, especially under difficult conditions, is greatly clarified if the frequency response is curtailed.

This short series of articles describes simple, but effective, ways of meeting these different requirements. Although the circuits are capable of a good standard of reproduction, they will particularly interest the constructor who looks for plenty of performance per pound or dollar.

We begin with the power amplifier. Six alternatives are given and, with the requirement of maximum performance for minimum cost and effort, they are all based on widely available integrated circuits (i.c.s):

- **LM386N-1**
- **TDA7052**
- **TBA820M**
- **LM380N**
- **TDA2003**.

HOW MUCH POWER?

Before considering the various circuits, it is worthwhile to reflect on the amount of power actually needed.

Clear reproduction in Walkman type earphones of reasonable sensitivity can be achieved with a miserly milliwatt (0·001W). When listening to talk programmes in a quiet domestic setting, the power fed to the speaker will hover around 50mW (0·05W), and this is ample for the operator of a communications receiver whose ears are closer to the sound source.

During the valve era, ten watts was considered adequate for the realistic reproduction of orchestral music, and some experts suggested a figure as low as five. One watt of power delivered to a

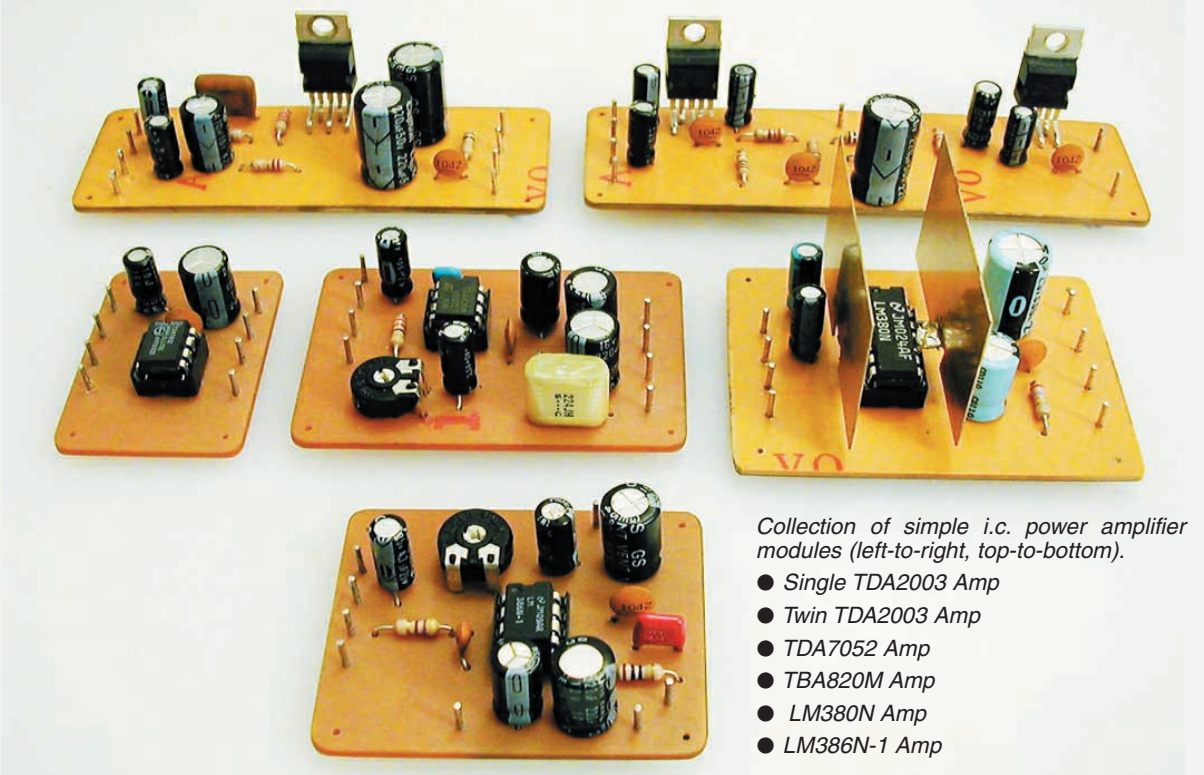

Collection of simple i.c. power amplifier modules (left-to-right, top-to-bottom).

- *Single TDA2003 Amp*
- *Twin TDA2003 Amp*
- *TDA7052 Amp*
- *TBA820M Amp*
- *LM380N Amp*
- *LM386N-1 Amp*

reasonably efficient speaker will produce a loud sound, a *continuous* five watts is becoming deafening, and ten will rattle windows. This assumes single channel, or mono, reproduction in a normal living room. The impact is, of course, greater with a stereo system.

This is at odds with the high power ratings of many of the quality amplifiers currently advertised. The desire for a big reserve of power, the low efficiency of some modern speakers, and different ways of measuring output, may account for the difference.

Output is variously rated as music power, sustained music, speech and music, and sinewave power. To add to the confusion, the figures are quoted at different distortion levels. The standard most often used when valves were commonplace, and the one adopted in this article, is the r.m.s. (root mean square) value of a continuous sinewave. This gives the lowest rating and is the most realistic expression of the amplifier's ability to deliver power into a load (speaker).

An increase in output power is reflected as much, if not more, in the cost of the power supply as it is in the actual amplifier. Because the theme of this article is good performance at modest cost, the most powerful amplifier described is rated at 12·5W r.m.s.

DISTORTION

Manufacturers of power-amplifier integrated circuits and modestly priced hi-fi systems (which invariably incorporate devices of this kind) usually rate the maximum power output at 10 per cent distortion. At this level there is a very noticeable roughness to the sound and clipping of the waveform on loud passages.

The power output levels quoted here have been measured just before the onset of clipping or any noticeable distortion of the output waveform. They are somewhat lower than the figures quoted by the i.c. manufacturers, but they do represent the highest output, free from audible distortion, that the device can deliver for a particular supply voltage and load.

NOISE

Modern power amplifier i.c.s have a very low noise level. Manufacturers usually define this internally generated electrical noise as an equivalent signal voltage at the input, but this doesn't give the average experimenter an immediate impression of its audible effect.

Accordingly, the devices described here were tested by disconnecting the signal source, turning the input or volume control to maximum, and then listening to the output on a pair of sensitive, Walkman type earphones.

In all cases the noise was no more than barely audible. The two devices which can be configured for high gain (LM386N and TBA820M) did produce a faint, but audible, hiss when the gain was set at maximum. The hiss was also noticeable with a loudspeaker connected.

However, when the gain preset was turned back a little, these i.c.s became as silent as the rest. Some constructors may need the highest possible gain, and details will be given later of measures which can be taken to eliminate the noise.

STABILITY

Provided a few basic precautions are observed, the amplifiers are all unconditionally stable. Most i.c.s of this kind have a ground connection for the input circuitry and a *separate* ground pin for the output stage.

The printed circuit board (p.c.b.) layouts have been designed to maintain this isolation, and care should be taken to ground the signal inputs and connect the negative power supply lead to the designated points on the board. Failure to do this could result in "motor boating" (low frequency instability).

Input leads should be *screened* to avoid mains hum and radio frequency (r.f.) signal pick up. Speaker leads should be twisted together to minimise external fields. Input and output leads should be spaced as far apart as possible: this is particularly important when the LM386N and TBA820M are set for high gain.

All of the circuits include high and low frequency bypass capacitors across the supply rails. The former minimise the possibility of r.f. oscillation: the latter avoid low frequency instability when long power supply leads are used, or when batteries are ageing.

HIGH FREQUENCY RESPONSE

The bandwidth of the amplifiers extends into the r.f. spectrum, and this makes the devices vulnerable to r.f. interference. Some of the i.c.s provide for the connection of an external capacitor in a negative feedback loop to "roll-off" the high frequency response. Selecting an appropriate value for this component will help to make the device immune.

The problem of r.f. pick up invariably manifests itself when a high value (more than 10 kilohms) input potentiometer (VR1) is used to match the amplifier to the impedance of a signal source. If the potentiometer or volume control must have a high resistance, connecting a 1nF or, at most, 10nF capacitor across its track will shunt unwanted r.f. to ground.

LOW FREQUENCY RESPONSE

The low frequency response of three of the lower powered amplifiers has been curtailed a little by fitting a 220μF speaker coupling capacitor. Amplifiers of this kind are invariably used with small, inexpensive speakers which are incapable of producing an audible output at frequencies below 150Hz or so. Feeding low frequencies to speakers of this kind only overloads them, causing distortion and loss of clarity.

Indeed, if the amplifier is being used primarily for speech, clarity can be much improved by rolling-off the frequency response below 300Hz, and an even lower value of coupling capacitor, say 100μF or even 47μF, would be of benefit. Readers seeking quality music reproduction at low power, via a speaker of reasonable size, should increase the coupling capacitor to say 1000μF.

This relationship between coupling capacitors and frequency response will be considered more fully in the next article.

DEVICE PROTECTION

The integrated circuits covered here are electrically robust but they are by no means indestructible. The TDA7052, LM380, and the TDA2003 incorporate protection against overload and output short ciruits: the other devices *do not*.

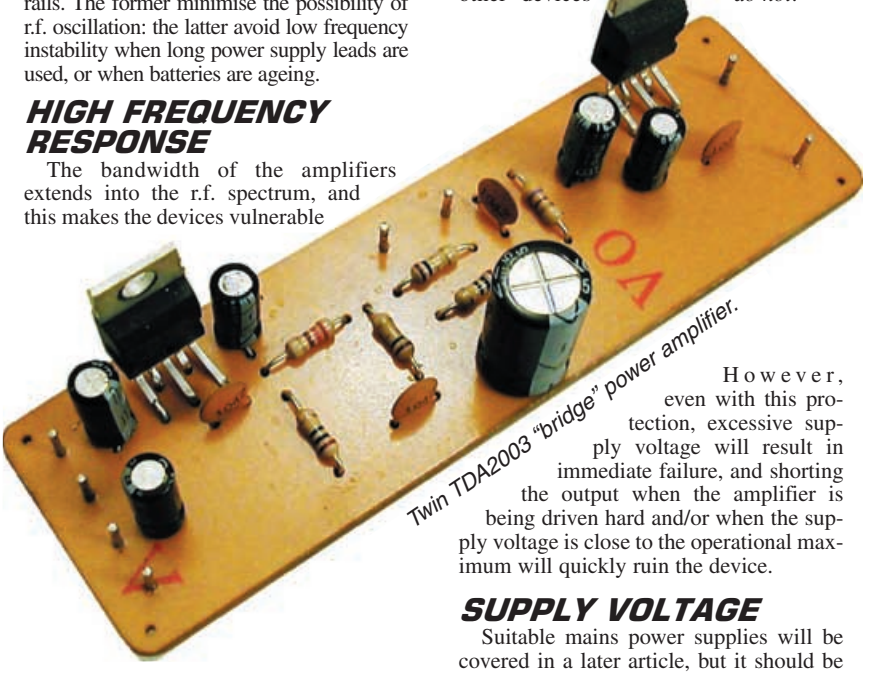

Twin TDA2003 "bridge" power amplifier.

However, even with this protection, excessive supply voltage will result in immediate failure, and shorting the output when the amplifier is being driven hard and/or when the supply voltage is close to the operational maximum will quickly ruin the device.

SUPPLY VOLTAGE

Suitable mains power supplies will be covered in a later article, but it should be mentioned now that, off-load, d.c. output voltages rise to 1·4 times the a.c. voltage delivered by transformer secondaries. When using unregulated mains power supplies care should, therefore, be taken to ensure that the off-load voltage is always less than the maximum safe working voltage of the amplifier. *Never connect a working power supply to an amplifier without first checking its output voltage.*

ELECTRICAL CHARACTERISTICS

The electrical characteristics of the various devices are tabulated alongside the circuit diagrams (except one) for easy reference. Power output figures are based on measurements taken on a single, randomly purchased sample. For reasons already given, they are somewhat lower than the figures quoted by the manufacturers.

Recommendations are made regarding the speaker impedances to use with various supply voltages in order to keep the dissipation of the devices within reasonable limits.

The input resistance, maximum voltage ratings, and frequency response details are those supplied by the manufacturers.

AMPLIFIER PROJECTS

In use, there is little to distinguish between the four, low powered amplifiers, all perform well. There are, however, differences which make one device more suitable than another for a particular application.

Low current consumption is important when equipment is powered from dry batteries. Quiescent current drawn by the small amplifiers is in the region of 6mA (13mA for the LM380).

In the case of the LM386N, TBA820M and LM380, current rises to around 120mA when 500mW is being delivered into an 8 ohm load. Current consumed by the TDA7052 is approximately 220mA, or almost double, under these conditions.

In all cases, the signal input pin has been connected to the slider (moving contact) of the Volume control potentiometer (via a blocking capacitor in the case of the TDA2003). This minimises hum and noise and ensures that a more or less constant impedance is presented to the signal source. Potentiometers of 4700 ohms or 10 kilohms (10k) are usual, but the value can be increased to 100k to raise input impedance.

This will, however, make the circuits more vulnerable to mains hum, r.f. interference and instability, and the value should be kept as low as the signal source impedance permits. This applies particularly to the TDA7052, where the value of the Volume control should, if possible, be no more than 10k. Earlier comments regarding stability are of relevance here.

LM386N-1 AMPLIFIER

A circuit diagram for a simple amplifier using the low-voltage LM386N-1 power amplifier i.c. is shown in Fig.1. Also shown are the general performance and electrical characteristics of the circuit.

Blocking capacitor C1 prevents any disturbance of the d.c. conditions in the signal source and potentiometer VR1 (the Volume control) sets the input level. The manufacturers of the chip, National Semiconductor, suggest an input network to roll-off high frequencies and resistor R1 and capacitor C2 perform this function.

The unused non-inverting input (pin 3) is grounded to avoid instability when gain is set high. Capacitors C3 and C4, connected across the supply rails, prevent low and high frequency instability.

FEEDBACK

An internal negative feedback path can be accessed via pin 1 and pin 8. Bypass capacitor C5 reduces the feedback and increases the gain of the chip from 23 to 170 times (as measured: samples will vary). Preset potentiometer VR2 (wired as a variable resistor) controls the bypassing effect of C5 and enables the gain to be set within these limits.

Bypass capacitor C6 makes the device more immune to supply line ripple, and C8 couples the output to the speaker LS1. The Zobel network, formed by resistor R2 and capacitor C7, ensures that the speaker always presents a resistive load to the amplifier. Without these components there is a risk of high level transients causing damage to the output transistors.

Tabulated power output levels for various supply voltages and speaker impedances are included below the circuit diagram. Sustained operation at more than 300mW is not recommended.

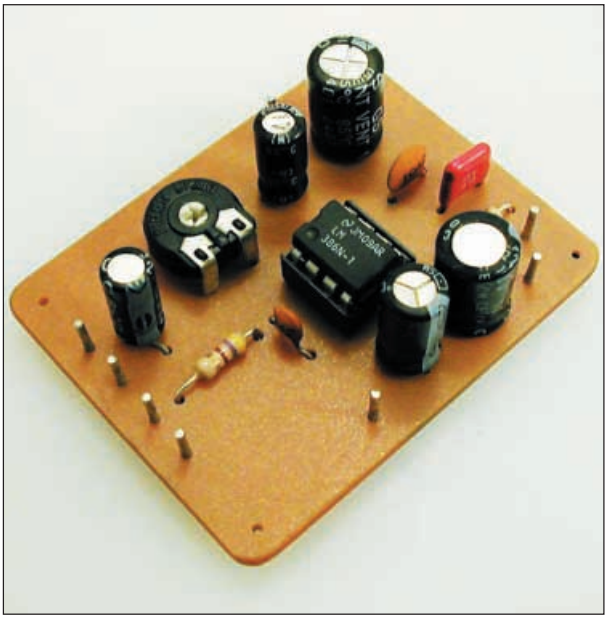

Completed LM386N-1 circuit board.

CIRCUIT BOARD

The printed circuit board component layout, wiring details and full-size copper foil master pattern are shown in Fig.2. This board is available from the *EPE PCB Service,* code 343 (LM386N-1).

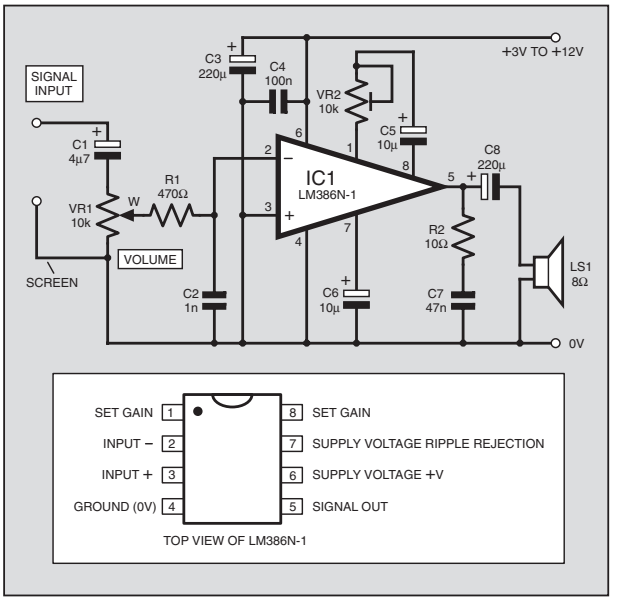

Fig.1. Circuit diagram and pinout details for the LM386N-1 Power Amplifier.

LM386N-1 POWER AMPLIFIER

R.M.S. power output just before the onset of waveform clipping

Speaker Impedance ohms	*Supply Voltage* 3V	4·5V	6V	9V	12V
4	60mW	150mW	320mW	500mW	–
8	26mW	105mW	200mW	560mW	900mW
16	15mW	60mW	110mW	320mW	605mW
32	-	35mW	62mW	170mW	330mW

Quiescent current:	6mA
Input resistance:	50k ohms
Input sensitivity for 560mW output (8 ohm load, 9V supply),	
(a) VR2 set for maximum resistance:	90mV r.m.s. (gain 23)
(b) VR2 set for minimum resistance:	12mV r.m.s. (gain 170)
Absolute maximum supply voltage, beyond which damage will occur:	15V
Suggested maximum supply voltage with a 4 ohm speaker	6V
Frequency response	up to 300kHz

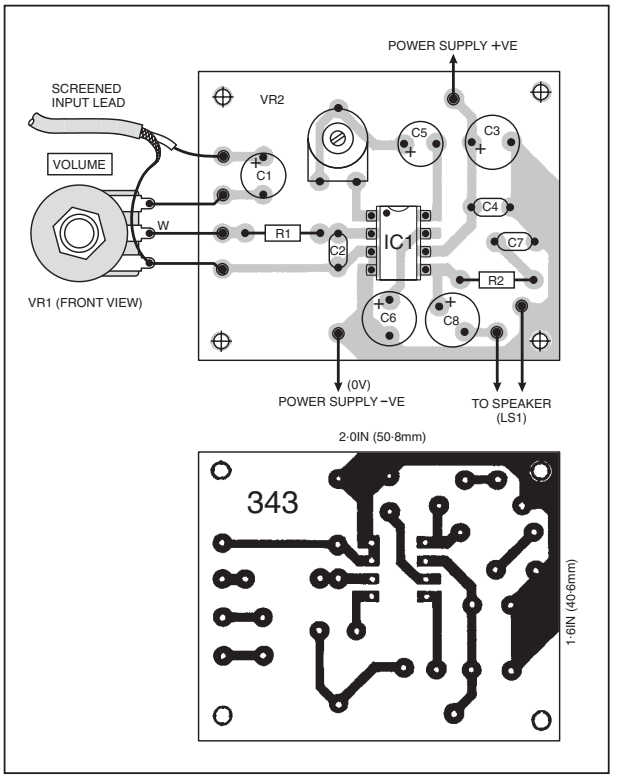

Fig.2. Printed circuit board, component layout, full-size copper foil master and interwiring for the LM386N-1 Amp.

COMPONENTS

LM386N-1 AMPLIFIER

Resistors
R1 470Ω R2 10Ω
All 0·25W 5% carbon film

Potentiometers
VR1 10k min. rotary carbon, log.
VR2 10k enclosed carbon preset

Capacitors
C1 4µ7 radial elect. 25V
C2 1n disc ceramic
C3, C8 220µ radial elect. 25V (2 off)
C4 100n disc ceramic
C5, C6 10µ radial elect. 25V (2 off)
C7 47n polyester

Semiconductor
IC1 LM386N-1 audio power amp i.c.

Miscellaneous
LS1 4 to 32 ohm loudspeaker (see text)

Printed circuit board available from the *EPE PCB Service,* code 343 (LM386N-1); case (optional), size and type to choice; 8-pin d.i.l. socket; multistrand connecting wire; audio screened cable; solder pins; solder etc.

See SHOP TALK page

Approx. Cost Guidance Only **£10.50** *excluding case & speaker*

TDA7052 AMPLIFIER

Philips have adopted a bridge arrangement for the TDA7052's output stage. This enables the chip to maintain a good output at low supply voltages and eliminates the need for a speaker coupling capacitor.

Gain is fixed internally, no provision is made for ripple rejection, and there is no Zobel network. This reduces the external component count to the d.c. blocking capacitor C1, Volume control VR1 and the supply line bypass capacitors, C2 and C3. The full circuit diagram, together with a specification guide, for the TDA7052 amplifier is shown in Fig.3.

Protection against output short circuits is built in and the device shuts down when the dissipation becomes excessive. This explains the small rise in sustainable output when the speaker impedance is increased to 16 ohms with a 9V supply.

Although usually costing a little more than the other low-power chips, this is the device of choice when the supply voltage has to be low, a good output is required, and high gain is not important. Current consumption for a given output power is, however, almost twice that of the LM386N and the TBA820M.

CIRCUIT BOARD

The printed circuit board component layout, wiring details and full-size copper foil master pattern are shown in Fig.4. This board is available from the *EPE PCB Service,* code 344 (TDA7052).

TDA7052 POWER AMPLIFIER
R.M.S. Power output just before the onset of waveform clipping

Speaker Impedance Ohms	*Supply Voltage* 3V	4·5V	6V	9V	12V
4	70mW	500mW	780mW	–	–
8	60mW	455mW	640mW	1W	–
16	40mW	235mW	450mW	1·12W	–
32	24mW	145mW	250mW	600mW	1·26W

Quiescent current	5mA
Input resistance	100k ohms
Input sensitivity for 1W output (8 ohm load, 9V supply)	40mV r.m.s. (gain 70)
Absolute maximum supply voltage beyond which damage will occur	18V
Suggested maximum supply voltage:	
with a 4 ohm speaker	6V
with 8 or 16 ohm speakers	9V
Frequency response at the –3dB points	25Hz – 20kHz

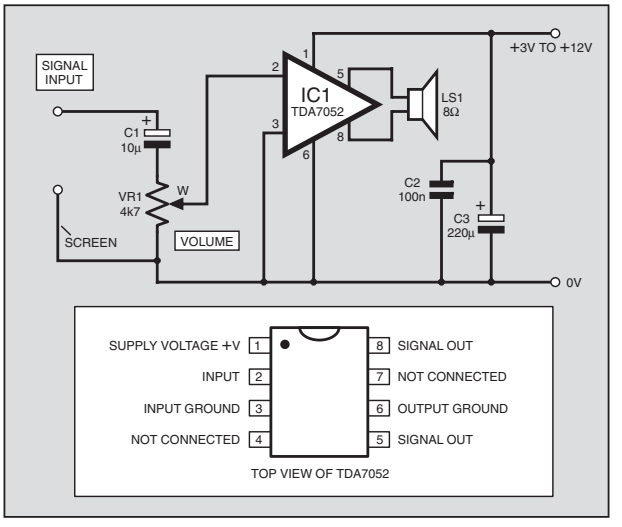

Fig.3. Circuit diagram and pinout details for the TDA7052 Amp. See left for performance guide.

COMPONENTS

TDA7052 AMPLIFIER

See SHOP TALK page

Capacitors

C1	10µ radial elect. 25V
C2	100n disc ceramic
C3	220µ radial elect. 25V

Potentiometers

VR1	4k7 min. rotary carbon, log.

Semiconductor

IC1	TDA7052 power amp i.c.

Miscellaneous

LS1	4 to 32 ohm loudspeaker (see text)

Printed circuit board available from the *EPE PCB Service,* code 344 (TDA7052); case (optional), size and type to choice; 8-pin d.i.l. socket; multistrand connecting wire; audio screened cable; solder pins; solder etc.

Approx. Cost Guidance Only **£9.50** ***excluding case & speaker***

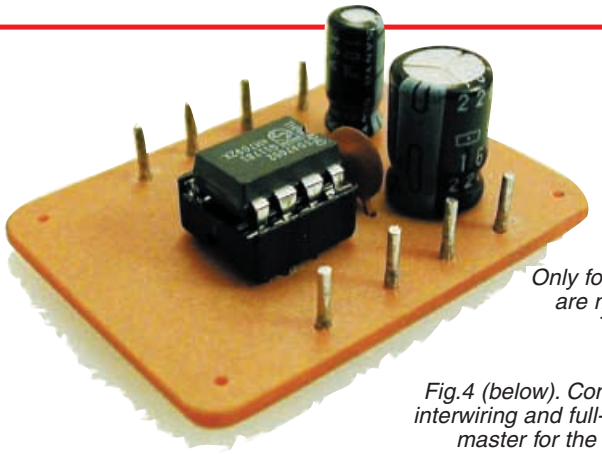

Only four components are mounted on the TDA7052 p.c.b.

Fig.4 (below). Component layout, interwiring and full-size copper foil master for the TDA7052 Amp.

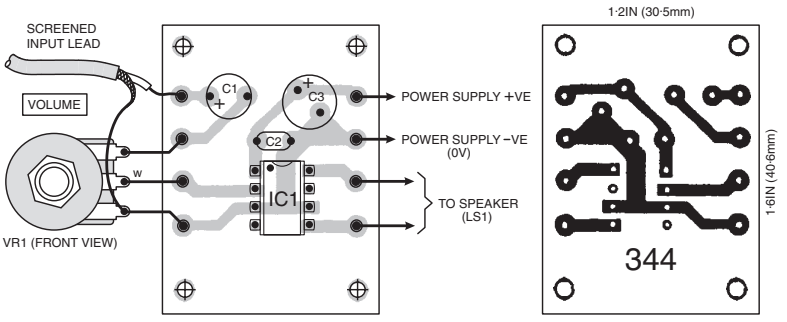

TBA820M AMPLIFIER

A circuit diagram incorporating the TBA820M audio amp i.c., which is manufactured by SGS-Thomson, together with a general performance guide, is given in Fig.5. The input arrangements, supply line bypassing, speaker coupling and Zobel network are conventional, and the relevant components can be identified from previous circuit descriptions.

Gain can be controlled by shunting an internal negative feedback loop, which is accessed at pin 2. Preset potentiometer VR2, placed in

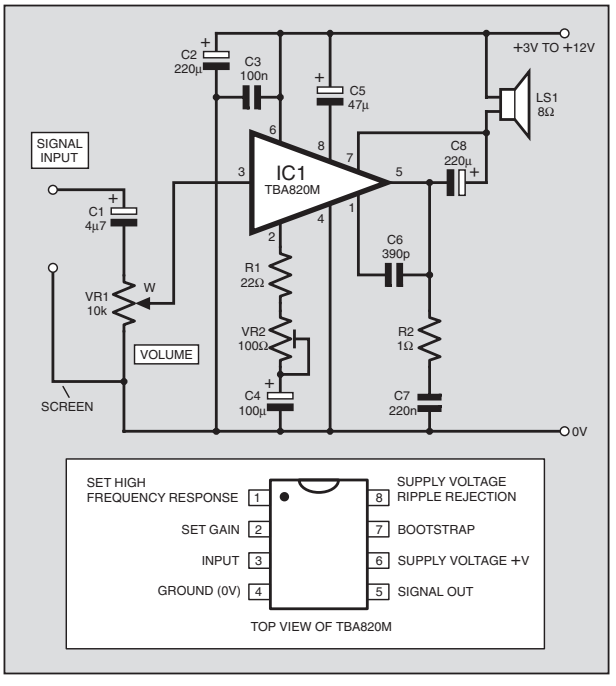

Fig.5. Circuit diagram and pinout details for the TBA820M power amplifier. See right for general performance details.

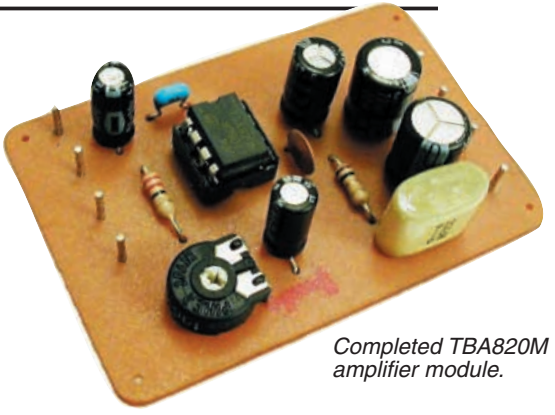

Completed TBA820M amplifier module.

TBA820M POWER AMPLIFIER

R.M.S. power output just before the onset of waveform clipping

Speaker Impedance Ohms	*Supply Voltage* 3V	4·5V	6V	9V	12V
4	10mW	320mW	405mW	980mW	–
8	20mW	200mW	300mW	680mW	1·1W
16	30mW	115mW	180mW	405mW	720mW
32	20mW	60mW	90mW	225mW	390mW

Quiescent current	6mA
Input resistance	5M ohms
Input sensitivity for 680mW output (8 ohm load, 9V supply):	
(a) VR2 set for maximum resistance	56mV r.m.s. (gain 40)
(b) VR2 set for minimum resistance	10mV r.m.s. (gain 230)
Absolute maximum supply voltage beyond which damage will occur	16V
Suggested maximum supply voltage:	
with a 4 ohm speaker	9V
with an 8 ohm speaker	12V
High frequency response at –3dB point:	
with C6 220pF	20kHz
with C6 680pF	7kHz

COMPONENTS

TBA820M AMPLIFIER

See SHOP TALK page

Resistors

R1	22Ω
R2	1Ω

All 0·25W 5% carbon film

Potentiometers

VR1	10k min. rotary carbon, log.
VR2	100Ω enclosed carbon preset

Capacitors

C1	4μ7 radial elect. 25V
C2, C8	220μ radial elect. 25V (2 off)
C3,	100n disc ceramic
C4	100μ radial elect. 25V
C5	47μ radial elect. 25V
C6	390p ceramic
C7	220n polyester

Semiconductor

IC1	TBA820M audio power amp i.c.

Miscellaneous

LS1	4 to 32 ohm loudspeaker (see text)

Printed circuit board available from the *EPE PCB Service,* code 345 (TBA820M); case (optional), size and type to choice; 8-pin d.i.l. socket; multistrand connecting wire; audio screened cable; solder pins; solder etc.

Approx. Cost Guidance Only **£10** ***excluding case & speaker***

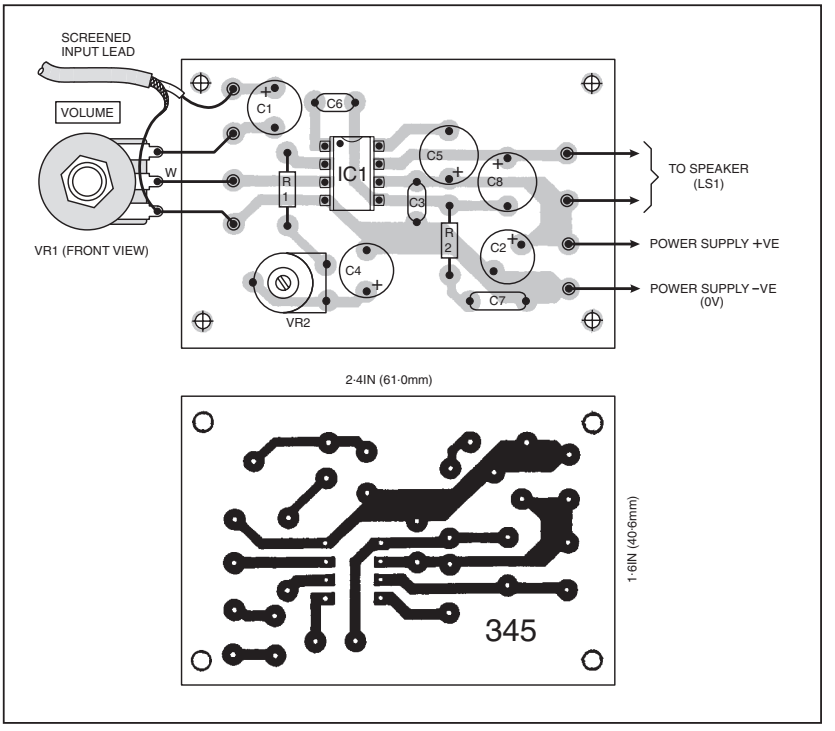

Fig.6. Topside component layout, off-board wiring details and full-size copper foil master for the TBA820M Amplifier.

series with capacitor C4, controls the shunting effect and, with the sample tested, gain could be set between 40 and 230.

High frequency response is determined by capacitor C6. The response at the –3dB points for different capacitor values is also listed in the table. If desired, the value of C6 can be increased to reduce the upper frequency response even more.

In this application, the speaker LS1 is connected to the positive supply rail as this reduces the component count (a capacitor and resistor are saved).

CIRCUIT BOARD

The printed circuit board component layout, wiring details and full-size copper foil master pattern are shown in Fig.6. This board is available from the *EPE PCB Service,* code 345 (TBA820M).

LM380N AMPLIFIER

An amplifier circuit diagram incorporating the LM380N audio i.c. is shown in Fig.7. A general specification guide is shown below.

The manufacturers, National Semiconductor, have made provision for optional heatsinking via some of the pins, and this makes the package larger (14-pin). The output is short-circuit proofed and there is dissipation limiting. Gain is fixed.

Again, the purpose of the various components will be evident from earlier descriptions. In this version of the circuit, the signal

LM380N POWER AMPLIFIER

R.M.S. power output just before the onset of waveform clipping

Speaker Impedance Ohms	*Supply Voltage* 9V	12V	15V	18V
4	400mW	1·12W	1·62W	–
8	275mW	720mW	1·32W	2·25W
16	137mW	405mW	720mW	1·32W
32	68mW	202mW	360mW	765mW

Quiescent current	13mA
Input resistance	150k ohms
Input sensitivity for 720mW output (8 ohm load, 12V supply)	50mV r.m.s. (gain 50)
Absolute maximum supply voltage beyond which damage will occur	22V

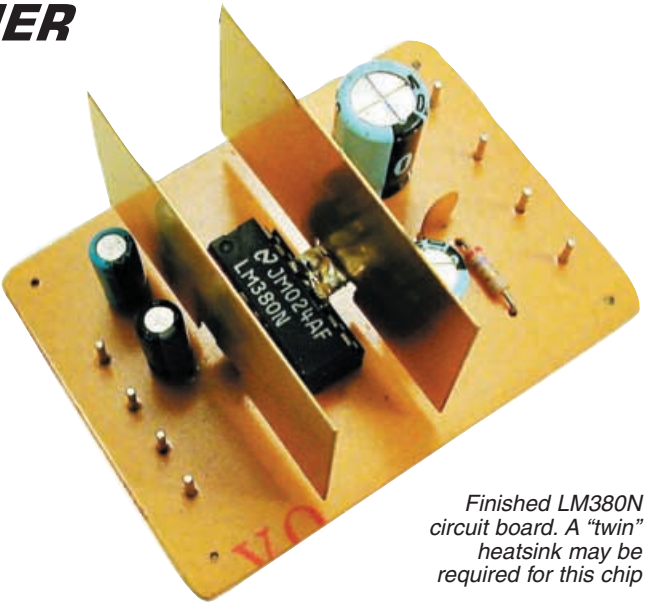

Finished LM380N circuit board. A "twin" heatsink may be required for this chip

A heatsink should be fitted if the device is to be operated, other than intermittently, at output levels in excess of 1W.

Without a heatsink, the suggested maximum supply voltages are:

with a 4 ohm speaker	12V
with an 8 ohm speaker	15V
Frequency response	up to 100kHz

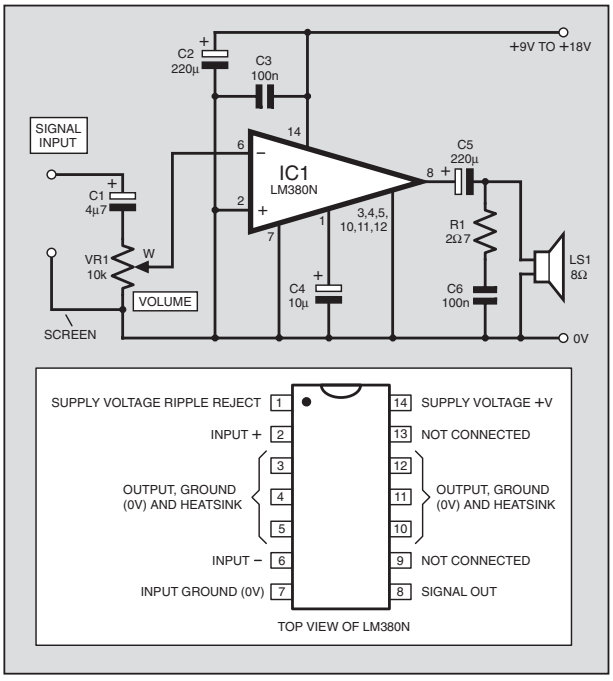

Fig.7. Circuit diagram for the LM380N Amplifier.

COMPONENTS

LM380N AMPLIFIER

See SHOP TALK page

Resistors
R1 2Ω7 0·25W 5% carbon film

Potentiometers
VR1 10k rotary carbon, log.

Capacitors
C1 4µ7 radial elect. 50V
C2, C5 220µ radial elect. 50V (2 off)
C3, C6 100n disc ceramic (2 off)
C4 10µ radial elect. 50V

Semiconductor
IC1 LM380N audio power amp i.c.

Miscellaneous
LS1 4 to 32 ohm loudspeaker (see text)

Printed circuit board available from the *EPE PCB Service,* code 346 (LM380N); case (optional), size and type to choice; 14-pin d.i.l. socket; heatsink (see text); multistrand connecting wire; audio screened cable; solder pins; solder etc.

Approx. Cost Guidance Only **£11** ***excluding case & speaker***

is applied to the inverting input (pin 6) and, to avoid instability, the non-inverting input (pin 2) is grounded (0V).

The manufacturers quote a minimum supply voltage of 10V. The sample tested worked with a 9V supply, but performance became erratic at lower voltages. Quiescent current, although modest, is double that of the other low-power devices, and this, together with the higher operating voltage, makes the i.c. more suitable for mains-powered equipment.

CIRCUIT BOARD

Details of the printed circuit board component layout, wiring and copper foil master are given in Fig.8. This board is also available from the *EPE PCB Service,* code 346 (LM380N).

Although the board has been kept small, as much copper as possible has been retained to afford some heatsinking.

TDA2003 AMPLIFIER

Produced by SGS-Thomson, the TDA2003 low-cost i.c. is mainly for use in car radios. Although chips designed specifically for "hi-fi" amplifiers are available, they usually require higher voltage and/or split rail power supplies. This makes them less easy and more expensive to use.

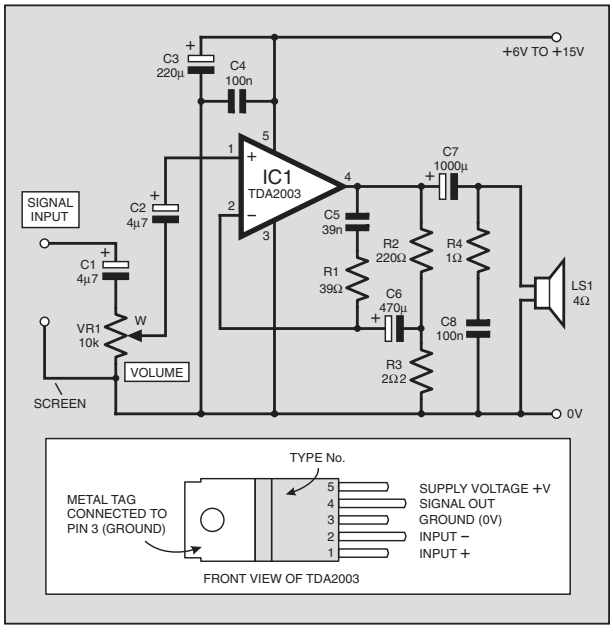

Fig.9. Circuit diagram for a single TDA2003 Amp.

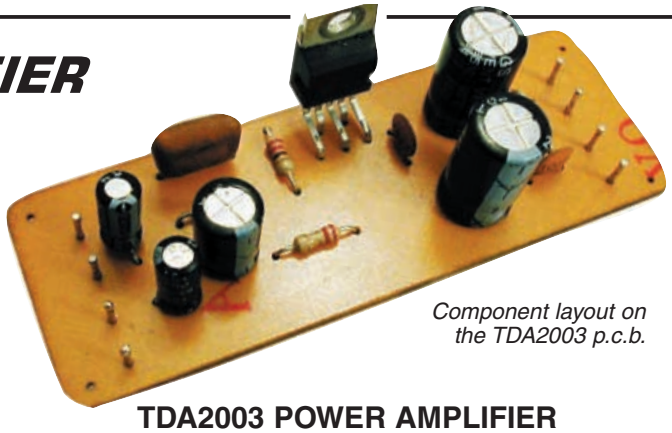

Component layout on the TDA2003 p.c.b.

TDA2003 POWER AMPLIFIER

R.M.S. power output just before the onset of waveform clipping

Speaker Impedance Ohms	*Supply Voltage 9V*	*12V*	*15V*
2	2·25W	4W	5·75W
4	1·28W	2·6W	3·9W
8	720mW	1·44W	2·1W

Quiescent current	45mA
Input sensitivity for 2.6W output (4 ohm load, 12V supply)	42mV r.m.s. (gain 80)
Absolute maximum supply voltage beyond which damage will occur	28V
Absolute maximum operating voltage	18V

Frequency response: 40Hz to 15kHz at the –3dB points.

The upper frequency limit can be extended by reducing the value of C5.

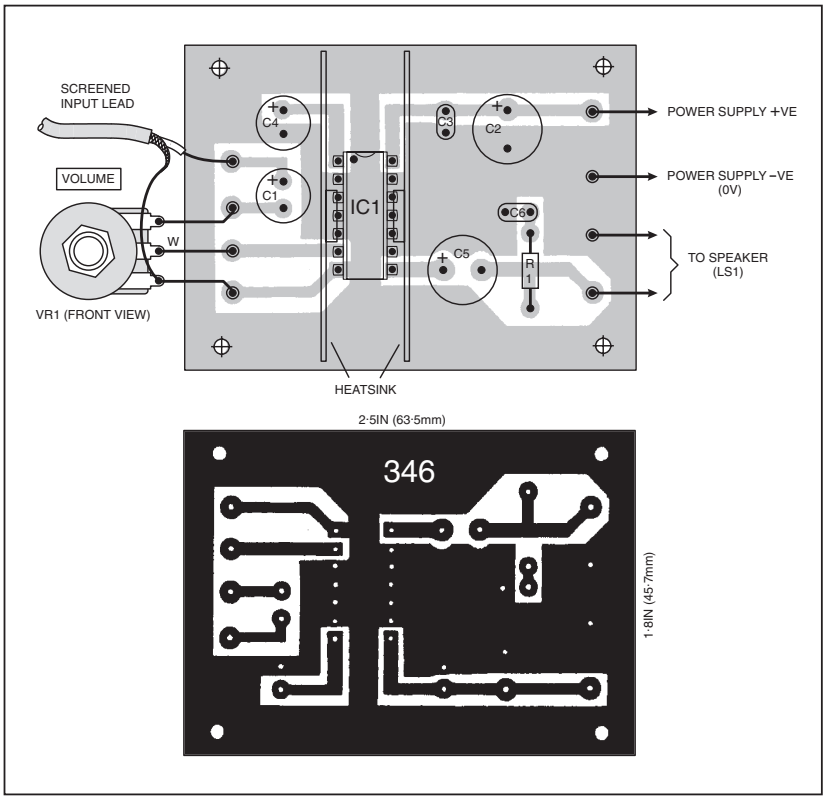

Fig.8. The LM380N printed circuit board component layout, off-board interwiring and full-size copper foil master pattern. Note the heatsinks.

HEATSINKS

For those readers who wish to get the most out of the chip, a suitable heatsink for the LM380 (Fig.7 and Fig.8) can be formed from two, 40mm (1⅝in.) lengths of 25mm × 0·4mm (1in. × 1/64in.) brass strip. Make two shallow cuts, 5mm (3/16in.) apart, close to the centre, and bend out a tag which can be soldered to the relevant pins of the i.c. Thin brass strip can be purchased from almost all model shops.

COMPONENTS

TDA2003 AUDIO AMPLIFIER

See SHOP TALK page

Resistors

R1	39Ω
R2	220Ω
R3	2Ω2
R4	1Ω

All 0·25W 5% carbon film

Potentiometers

VR1	10k rotary carbon, log.

Capacitors

C1, C2	4μ7 radial elect. 50V (2 off)
C3	220μ radial elect. 50V
C4	100n disc ceramic
C5	39n polyester
C6	470μ radial elect. 50V
C7	1000μ radial elect. 50V
C8	100n polyester

Semiconductor

IC1	TDA2003 audio power amp i.c.

Miscellaneous

LS1	4 to 32 ohm loudspeaker (see text)

Printed circuit board available from the *EPE PCB Service,* code 347 (TDA2003); case (optional), size and type to choice; heatsink (see text); audio screened cable; multistrand connecting wire; solder pins; solder etc.

Approx. Cost Guidance Only **£11** ***excluding case & speaker***

The TDA2003 incorporates short circuit and overload protection, and is extremely rugged. It will deliver a worthwhile output at modest supply voltages, and the suitability of car batteries as a power source may make it of particular interest to some readers. The circuit diagram of a single chip TDA2003 audio amplifier is given in Fig.9.

Grounding the input (pin 1) of this device would upset the internal biasing arrangements, so a second blocking capacitor C2 must be provided. The high frequency response is set by capacitor C5 in conjunction with resistor R1. The response can be extended by reducing the value of C5. Supply line ripple rejection is afforded by capacitor C6.

The outputs which can be delivered at various supply voltages are tabulated in the accompanying table. The current drawn from a 15V supply when 4W are dissipated into a 4 ohm load is around 500mA. The 2 ohm load is obtained by connecting two 4 ohm speakers in parallel.

At these power levels, the device must, of course, be connected to an adequate heatsink, and this is discussed later.

The printed circuit board component layout, wiring and full-size copper foil master pattern for the single chip TDA2003 amplifier are shown in Fig.10. This board is available from the *EPE PCB Service,* code 347 (TDA2003).

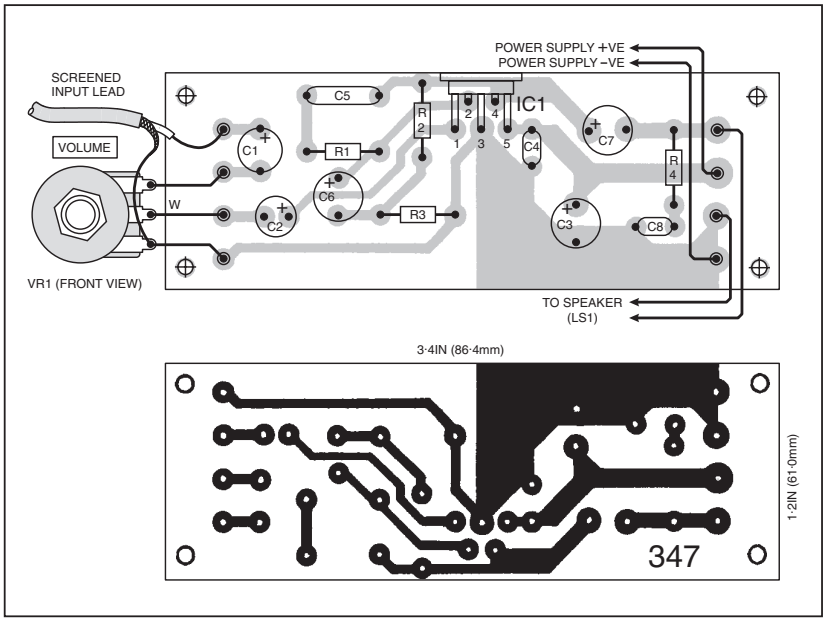

Fig.10. Printed circuit board component layout, full-size foil master and off-board wiring for the single TDA2003 Amplifier.

TWIN TDA2003 AMPLIFIER

A circuit diagram using two TDA2003 chips in a bridge configuration is shown in Fig.11, together with a general performance guide.

Drawing around 1·7A from a 15V supply, this combination will deliver a clean 12·5W into a 4 ohm load. The case for this being adequate for domestic listening has already been argued, but individual constructors will, of course, decide whether or not it will meet their needs.

TWIN TDA2003 AMPLIFIER

COMPONENTS

TWIN TDA2003 POWER AMP

Resistors

R1, R4	1Ω (2 off)
R2	220Ω
R3, R5	10Ω (2 off)
R6	470Ω

All 0·25W 5% carbon film

See SHOP TALK page

Potentiometers

VR1	10k rotary carbon

Capacitors

C1, C2	
C9	4µ7 radial elect. 50V (3 off)
C3, C8	100n disc ceramic (2 off)
C4	22µ radial elect. 50V
C5, C6	100n polyester (2 off)
C7	10µ radial elect. 50V
C10	220µ radial elect. 50V

Semiconductor

IC1, IC2	TDA2003 audio power amp i.c. (2 off)

Miscellaneous

LS1	2 to 8 ohm loudspeaker (see text)

Printed circuit board available from the *EPE PCB Service,* code 348 (TDA2003); case (optional), size and type to choice; heatsink (see text); audio screened cable; multistrand connecting wire; solder pins;

Approx. Cost Guidance Only **£14** ***excluding case & speaker***

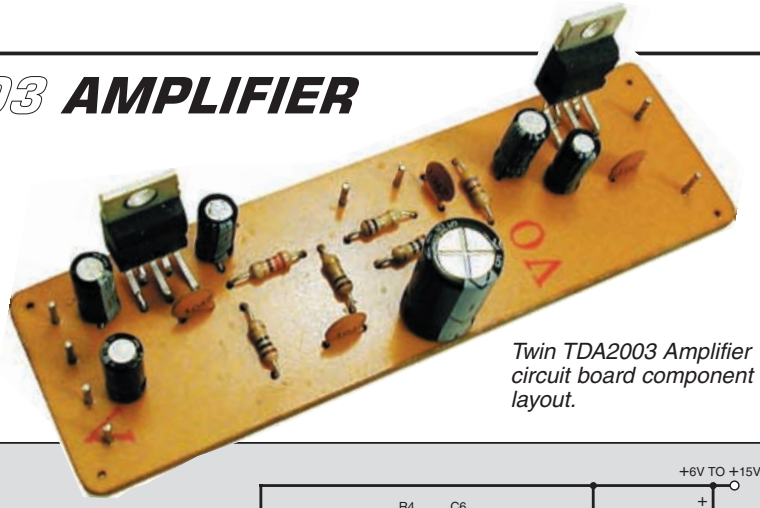

Twin TDA2003 Amplifier circuit board component layout.

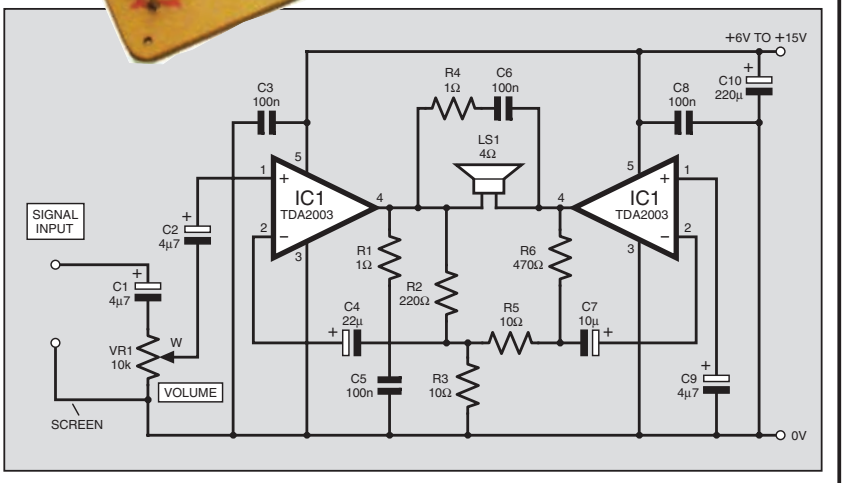

Fig.11 (above). Circuit diagram for the Twin TDA2003 Power Amplifier.

TWO TDA2003 BRIDGE CONFIGURATION POWER AMP

R.M.S. power output just before the onset of waveform clipping

Speaker Impedance Ohms	*Supply Voltage* 9V	12V	15V
2	6·25W	10·5W	–
4	3·78W	8W	12·5W
8	2W	5W	8·2W

Quiescent current	80mA
Input sensitivity for 8W output (4 ohm load, 12V supply)	70mV r.m.s. (gain 40)

See single TDA2003 for details of absolute maximum ratings.

Fig.12 (below). Component layout, off-board inter-wiring and full-size copper foil master for the Twin TDA2003 Amp. You will need a heatsink for these devices.

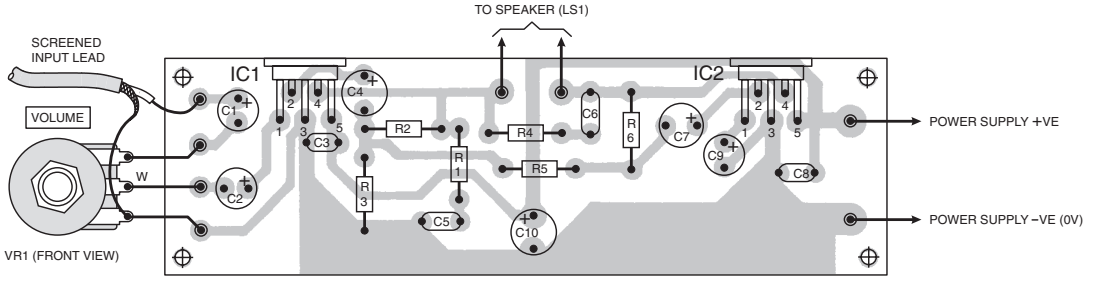

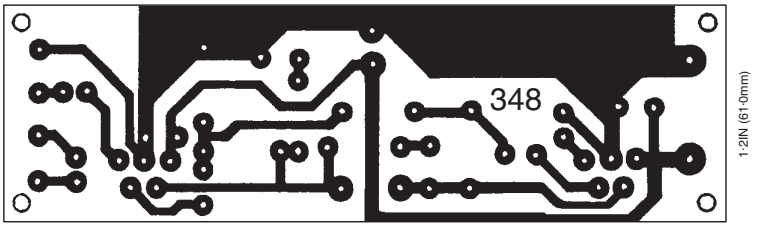

The printed circuit board component layout, wiring and copper foil master are detailed in Fig.12. Again, combined or separate heatsinks must be fitted to the integrated circuit's metal tabs. The p.c.b. is obtainable from the *EPE PCB Service,* code 348 (Twin TDA22003).

HEATSINKS

A large area metal heatsink is required for the TDA2003 (Fig.9 and Fig.11). Because the device incorporates overload protection, the actual size is not too critical (the i.c. will shut down when it begins to overheat), but sustained high output will only be developed if the heatsink is adequate. At the very least use 40sq. cm (6·5sq. in.) of 16s.w.g. aluminium per chip, or fit a proprietary heatsink with a thermal resistance not greater than 7°C per watt.

The i.c.s are arranged on the p.c.b. (see Fig.10 and Fig.12) so that they can be bolted to the back of a metal case by their metal tabs. A 50mm × 150mm × 200mm (2in. × 6in. × 8in.) aluminium box would be more than adequate as a heatsink. Insulating washers are not required, but a smear of heat transfer compound should be applied.

COMPONENTS

Slight differences in the i.c. type numbers can cause confusion. The LM386N-1 has the lowest power rating of this group of devices. The suffixes "N-3" and "N-4" indicate devices rated at 700mW and 1W respectively. The suffix "M' indicates surface mounting. Suppliers offering the LM386 are usually referring to the N-1 version.

The TDA7052 is sometimes given the suffix "A". This indicates that the chip contains a d.c. volume control and is *not* suitable for the circuit described here.

Some suppliers give the LM380 the suffix "14" to indicate the 2·5W 14-pin version, and the suffix "8" for the 8-pin 600mW alternative. When ordering, make it clear that the 14-pin chip is required.

The suffix "P" or "V" is sometimes added by suppliers to the TDA2003 to indicate that it is for vertical, and "H" for horizontal, mounting. There is no electrical difference, but the p.c.b.s illustrated here have been designed for vertical chips.

CONSTRUCTION

All the amplifiers covered in this part are assembled on printed circuit boards and construction is reasonably straightforward. The use of an i.c. holder will permit the substitution and checking of the low power amplifiers. However, if reliance is to be placed on the p.c.b. foil for minimal heatsinking of the LM380, the device should be soldered directly in place. Solder pins, inserted at the lead-out points, will simplify off-board wiring.

It may help to start construction of the chosen circuit board by first placing and soldering the i.c. holder on the p.c.b. to act as an "orientation" guide. This should be followed by the lead-off solder pins, and then the smallest components (resistors) working up to the largest, electrolytic capacitors and presets. Finally, the lead-off wires (including the screened input cable), off-board Volume control and loudspeaker should be attached to the p.c.b.

On completion, check the board for poor soldered joints or bridged tracks. Check the orientation of the electrolytic capacitors and the i.c.(s).

If using a mains power supply, make sure the voltage delivered does not exceed the safe working voltage of the amplifier for the load impedance being used.

If all is in order, connect the power supply and check the quiescent current consumption. Inject a signal and re-check the current drain and supply voltage.

Next Month: Transistor preamplifiers

BK ELECTRONICS

A COMPLETE RANGE OF
INVERTERS
150W TO 2500W - 12V & 24V

A Complete range of regulated inverters to power 220V and 240V AC equipment via a car, lorry or boat battery. Due to their high performance (>90%) the inverters generate very little heat. The high stability of the output frequency (+/-1%) makes them equally suitable to power sensitive devices.

These inverters generate a modified sine wave, which are considerably superior to the square waves which are produced by most other inverters. Due to this superior feature they are capable of powering electrical equipment such as TV,s, videos, desktop & notepad computers, microwave ovens, electrical lamps, pumps, battery chargers, etc.

Low Battery Alarm

The inverters give an audible warning signal when the battery voltage is lower than 10.5V (21V for the 24V version). The inverter automatically shuts off when the battery voltage drops below 10V (20V for the 24V version). Fuse protected input circuitry.

Order Code	Power	Voltage	Price
651.581	150W Continuous	12V	£36.39
651.578	150W Continuous	24V	£36.39
651.582	300W Continuous	12V	£50.64
651.585	300W Continuous	24V	£50.64
651.583	600W Continuous	12V	£101.59
651.593	600W Continuous	24V	£101.59
651.587	1000W Continuous	12V	£177.18
651.597	1000W Continuous	24V	£177.18
651.602	1500W Continuous	12V	£314.52
651.605	1500W Continuous	24V	£314.52
651.589	2500W Continuous	12V	£490.54
651.599	2500W Continuous	24V	£490.54

All prices are inclusive of V.A.T. Carriage £6.00 Per Order

Many uses include:- * Fetes * Fairgrounds * Airshows * Picnics * Camping * Caravans * Boats * Carnivals * Field Research and * Amateur Radio field days * Powering Desktop & Notepad Computers.

DELIVERY CHARGES ARE £6-00 PER ORDER. OFFICIAL ORDERS FROM SCHOOLS, COLLEGES, GOVT. BODIES, PLC,S ETC. PRICES ARE INCLUSIVE OF V.A.T. SALES COUNTER. VISA AND ACCESS ACCEPTED BY POST, PHONE OR FAX, OR EMAIL US AT SALES@BKELEC.COM ALTERNATIVELY SEND CHEQUE OR POSTAL ORDERS MADE PAYABLE TO BK ELECTRONICS.

B.K. ELECTRONICS

UNIT 1, COMET WAY, SOUTHEND-ON-SEA, ESSEX. SS2 6TR
TEL.: +44(0)1702-527572 FAX.:+44(0)1702-420243

For Full Specifications View our web site at:-
WWW.BKELEC.COM/INVERTERS.HTM