http://www.xiaoyu163.com

Pioneer

# Service Manual

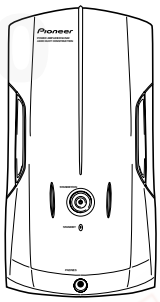

ORDER NO.
**RRV2445**

## STEREO POWER AMPLIFIER

# M-IS22

**THIS MANUAL IS APPLICABLE TO THE FOLLOWING MODEL(S) AND TYPE(S).**

| Type | Model | Power Requirement | Remarks |
|---|---|---|---|
| | M-IS22 | | |
| MYXJ | ◯ | AC220-230V | |
| NVXJ | ◯ | AC230V | |

- **This product is a component of a system.**
  **For the accessories, instruction manuals etc., refer to the service manuals RRV2442 for XC-IS22CD.**
- **This product does not function properly when independent; to avoid malfunctions, be sure to connect it to the prescribed system component(s), otherwise damage may result.**

| Component | System | | Service Manual | Remarks |
|---|---|---|---|---|
| CD TUNER DECK | XC-IS22CD | | RRV2442 | |
| STEREO POWER AMPLIFIER | M-IS22 | | RRV2445 | This Service Manual |
| SPEAKER SYSTEM | S-IS22 | —— | RRV2450 | |
| | —— | S-IS22S | RRV2451 | |

## CONTENTS


1. SAFETY INFORMATION ····· 2
2. EXPLODED VIEWS AND PARTS LIST ····· 3
3. SCHEMATIC DIAGRAM ····· 6
4. PCB CONNECTION DIAGRAM ····· 12
5. PCB PARTS LIST ····· 18
6. ADJUSTMENT ····· 20
7. GENERAL INFORMATION ····· 21
   7.1 SINGLE OPERATION METHOD ····· 21
8. PANEL FACILITIES AND SPECIFICATIONS ···· 22



**PIONEER CORPORATION** 4-1, Meguro 1-chome, Meguro-ku, Tokyo 153-8654, Japan
**PIONEER ELECTRONICS SERVICE, INC.** P.O. Box 1760, Long Beach, CA 90801-1760, U.S.A.
**PIONEER EUROPE NV** Haven 1087, Keetberglaan 1, 9120 Melsele, Belgium
**PIONEER ELECTRONICS ASIACENTRE PTE. LTD.** 253 Alexandra Road, #04-01, Singapore 159936

**©PIONEER CORPORATION 2001**

T – ZZK APR. 2001 Printed in Japan

http://www.xiaoyu163.com

http://www.xiaoyu163.com



# 1. SAFETY INFORMATION

**This service manual is intended for qualified service technicians; it is not meant for the casual do-it-yourselfer. Qualified technicians have the necessary test equipment and tools, and have been trained to properly and safely repair complex products such as those covered by this manual.**

**Improperly performed repairs can adversely affect the safety and reliability of the product and may void the warranty. If you are not qualified to perform the repair of this product properly and safely, you should not risk trying to do so and refer the repair to a qualified service technician.**

WARNING

This product contains lead in solder and certain electrical parts contain chemicals which are known to the state of California to cause cancer, birth defects or other reproductive harm.

Health & Safety Code Section 25249.6 – Proposition 65

NOTICE

(FOR CANADIAN MODEL ONLY)

Fuse symbols (fast operating fuse) and/or (slow operating fuse) on PCB indicate that replacement parts must be of identical designation.

REMARQUE

(POUR MODÈLE CANADIEN SEULEMENT)

Les symboles de fusible (fusible de type rapide) et/ou (fusible de type lent) sur CCI indiquent que les pièces de remplacement doivent avoir la même désignation.

## (FOR USA MODEL ONLY)

### 1. SAFETY PRECAUTIONS

The following check should be performed for the continued protection of the customer and service technician.

### LEAKAGE CURRENT CHECK

Measure leakage current to a known earth ground (water pipe, conduit, etc.) by connecting a leakage current tester such as Simpson Model 229-2 or equivalent between the earth ground and all exposed metal parts of the appliance (input/output terminals, screwheads, metal overlays, control shaft, etc.). Plug the AC line cord of the appliance directly into a 120V AC 60 Hz outlet and turn the AC power switch on. Any current measured must not exceed 0.5 mA.

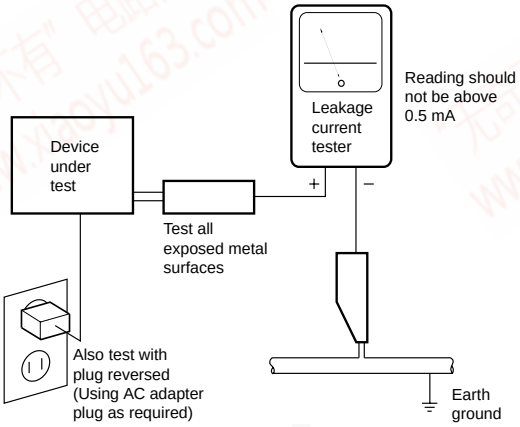


AC Leakage Test

**ANY MEASUREMENTS NOT WITHIN THE LIMITS OUTLINED ABOVE ARE INDICATIVE OF A POTENTIAL SHOCK HAZARD AND MUST BE CORRECTED BEFORE RETURNING THE APPLIANCE TO THE CUSTOMER.**

### 2. PRODUCT SAFETY NOTICE

Many electrical and mechanical parts in the appliance have special safety related characteristics. These are often not evident from visual inspection nor the protection afforded by them necessarily can be obtained by using replacement components rated for voltage, wattage, etc. Replacement parts which have these special safety characteristics are identified in this Service Manual.

Electrical components having such features are identified by marking with a ⚠ on the schematics and on the parts list in this Service Manual.

The use of a substitute replacement component which does not have the same safety characteristics as the PIONEER recommended replacement one, shown in the parts list in this Service Manual, may create shock, fire, or other hazards.

Product Safety is continuously under review and new instructions are issued from time to time. For the latest information, always consult the current PIONEER Service Manual. A subscription to, or additional copies of, PIONEER Service Manual may be obtained at a nominal charge from PIONEER.



http://www.xiaoyu163.com

http://www.xiaoyu163.com



# 2. EXPLODED VIEWS AND PARTS LIST

*NOTES:* ● *Parts marked by "NSP" are generally unavailable because they are not in our Master Spare Parts List.*
● *The ⚠ mark found on some component parts indicates the importance of the safety factor of the part. Therefore, when replacing, be sure to use parts of identical designation.*
● *Screws adjacent to ▼ mark on product are used for disassembly.*

## 2.1 PACKING

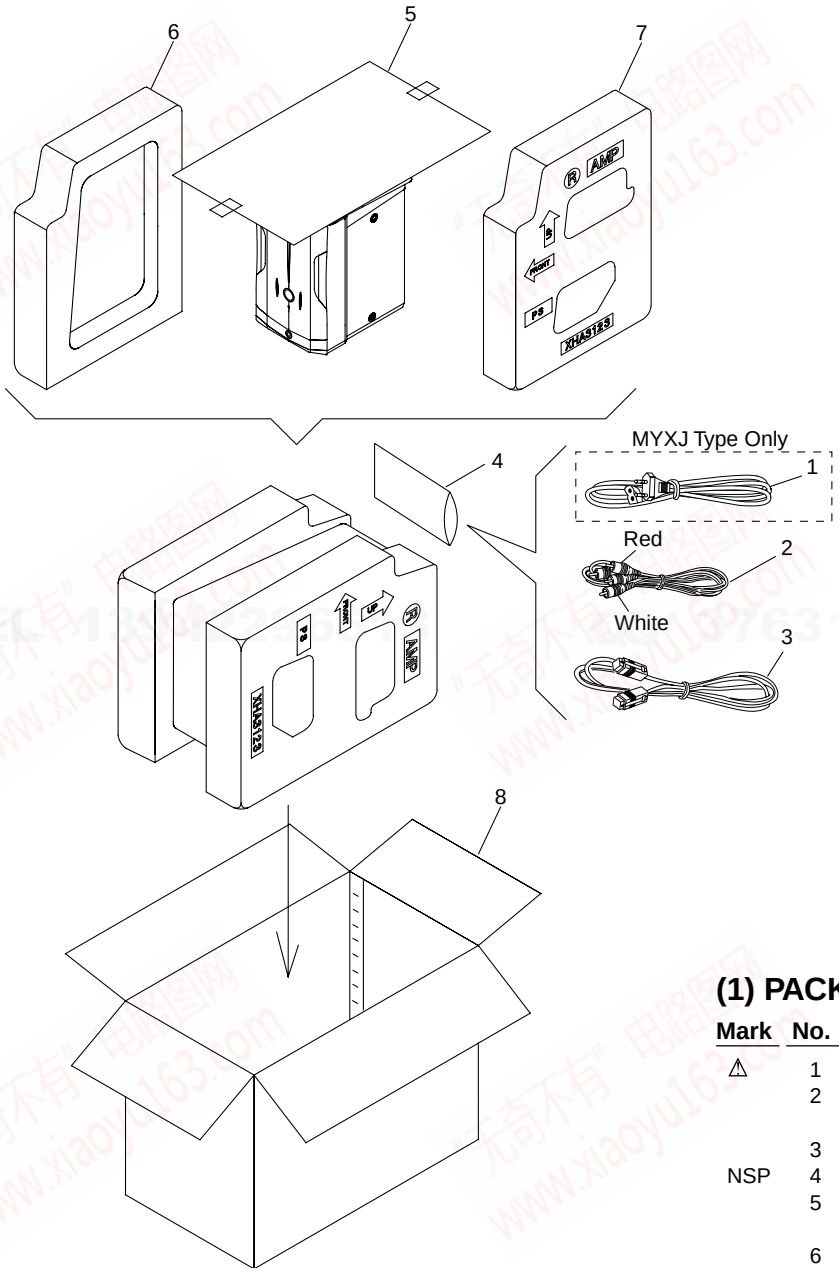


### (1) PACKING PARTS LIST

| Mark | No. | Description | Part No. |
|---|---|---|---|
| ⚠ | 1 | Power Cord | See Contrast table (2) |
| | 2 | RCA pin-plug stereo cable (L=1m) | PDE1126 |
| | 3 | System Cable | XDE3042 |
| NSP | 4 | Polyethylene Bag | Z21-038 |
| | 5 | Packing Sheet | AHG7053 |
| | 6 | Protector L(A) | XHA3122 |
| | 7 | Protector R(A) | XHA3123 |
| | 8 | Packing Case A(MY) | XHD3170 |

### (2) CONTRAST TABLE

M-IS22/MYXJ and NVXJ are constructed the same except for the following :

| Mark | No. | Symbol and Description | Part No. | | Remarks |
|---|---|---|---|---|---|
| | | | MYXJ Type | NVXJ Type | |
| ⚠ | 1 | Power Cord | ADG1154 | Not used | |



http://www.xiaoyu163.com

http://www.xiaoyu163.com



## 2.2 EXTERIOR

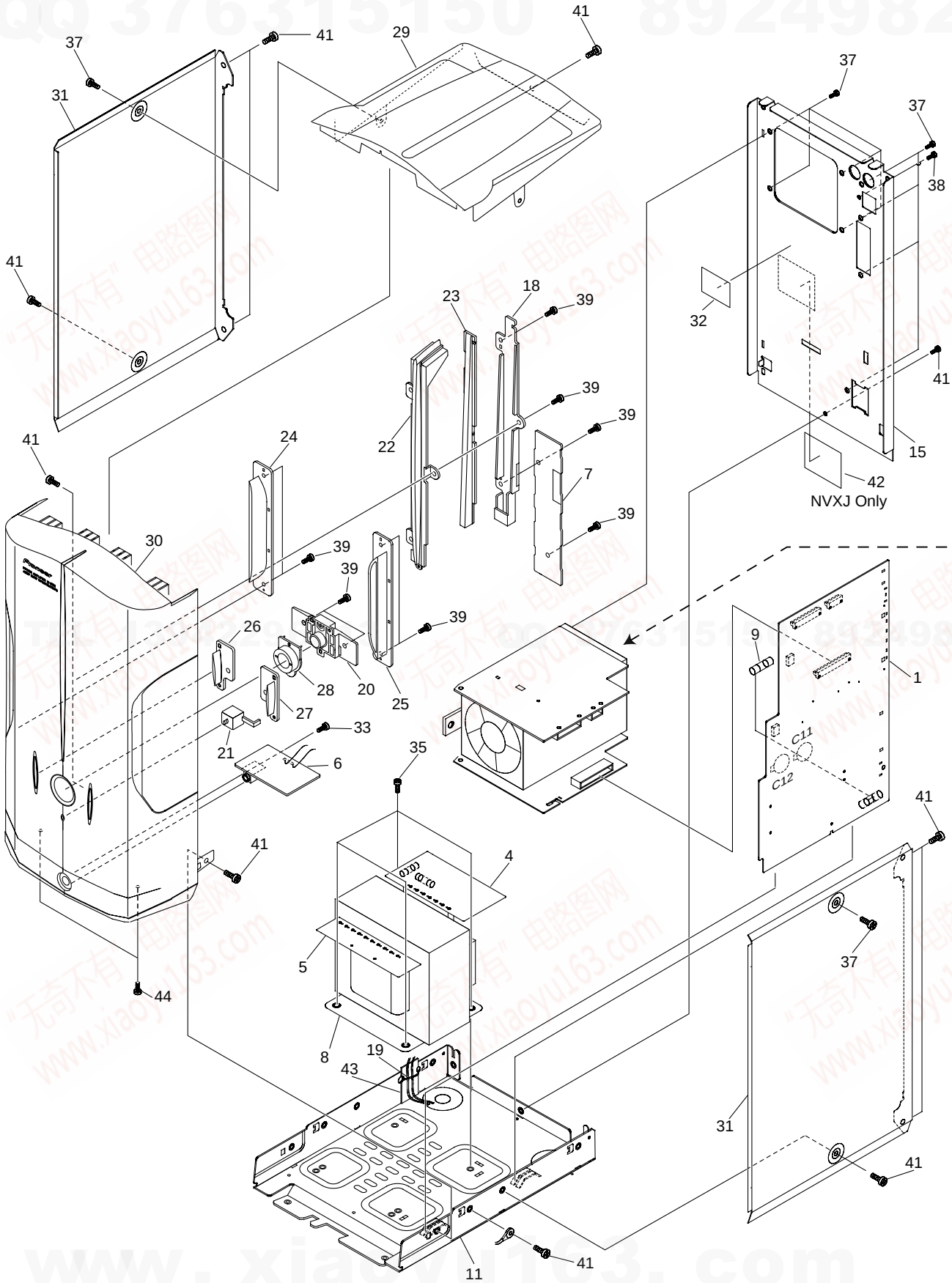




http://www.xiaoyu163.com

http://www.xiaoyu163.com



Caution when disassemble.
Even if the power supply code is pulled out from the outlet, neither C11 nor C12 of AF ASSY are discharged.
Please discharge C11 and C12 of AF ASSY by the resistor of 100 Ω or more before removing AF ASSY or POWER SUPPLY ASSY.
There is a possibility to destroy the transistor, and Please discharge by the resistor of 100 Ω or more.

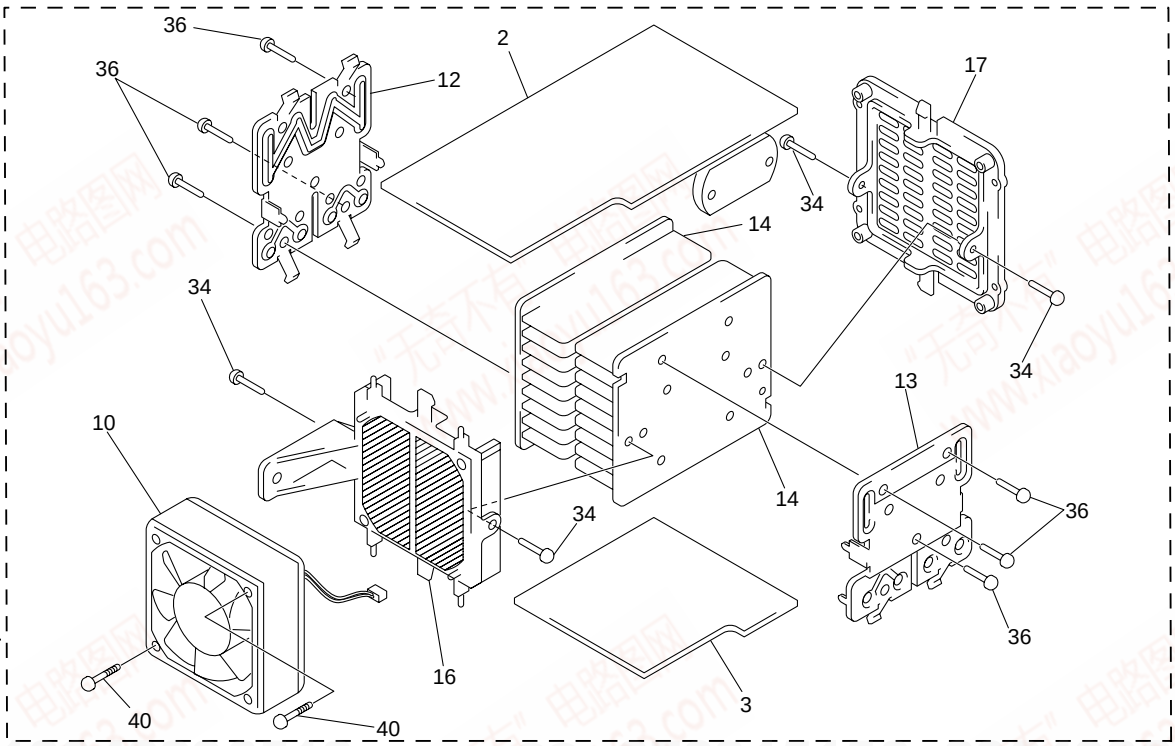


## (1) EXTERIOR PARTS LIST

| Mark | No. | Description | Part No. |
|---|---|---|---|
| NSP | 1 | MAIN Assy | XWZ3418 |
| NSP | 2 | AMP Assy | XWZ3419 |
| NSP | 3 | POWER SUPPLY Assy | XWZ3420 |
| NSP | 4 | PRIMARY Assy | XWZ3421 |
| NSP | 5 | SECONDARY Assy | XWZ3422 |
| NSP | 6 | HP Assy | XWZ3423 |
| NSP | 7 | BLUE LED Assy | XWZ3488 |
| | 8 | Power Transformer | ATS7247 |
| ⚠ | 9 | Fuse (FU1 : 3.15A) | REK1027 |
| | 10 | DC Fan Motor | AXM7014 |
| NSP | 11 | Chassis A | ANA7086 |
| | 12 | Holder | ANG7009 |
| | 13 | Power Pac Holder | ANG7109 |
| | 14 | Heat Sink | ANH7058 |
| | 15 | Rear Panel A (MY) | XNC3107 |
| | 16 | Mold A | AMR7005 |
| | 17 | Mold B | AMR7006 |
| | 18 | Reflector A | XMR3041 |
| | 19 | Binder | ZCA-SKB90BK |
| | 20 | Standby Button | XAD3096 |

| Mark | No. | Description | Part No. |
|---|---|---|---|
| | 21 | Standby Lens | XAK3193 |
| | 22 | AMP Lens | XAK3194 |
| | 23 | LT Conductor A | XAK3219 |
| | 24 | Side Duct L | XAK3220 |
| | 25 | Side Duct R | XAK3221 |
| | 26 | AMP Twin L | XAK3222 |
| | 27 | AMP Twin R | XAK3223 |
| | 28 | AMP Escutcheon | XAK3226 |
| | 29 | Top Panel | XAN3031 |
| | 30 | Front Panel A | XMB3046 |
| | 31 | Side Bonnet | ANE7242 |
| NSP | 32 | ICP Label | AAX7738 |
| | 33 | Screw With Washer | ABA1005 |
| | 34 | Screw | ABA1021 |
| | 35 | Screw | BBT40P060FZK |
| | 36 | Screw | BBZ30P180FMC |
| | 37 | Screw | BPZ30P080FZK |
| | 38 | Screw | BMZ30P060FZK |
| | 39 | Screw | BPZ30P100FZK |
| | 40 | Screw | BPZ30P350FZK |
| | 41 | Screw | VBZ30P060FZK |
| | 42 | Name Label | See Contrast table (2) |
| NSP | 43 | BIND Assy | • • • • • |
| | 44 | Screw | BBZ30P080FMC |

## (2) CONTRAST TABLE

M-IS22/MYXJ and NVXJ are constructed the same except for the following :

| Mark | No. | Symbol and Description | Part No. | | Remarks |
|---|---|---|---|---|---|
| | | | MYXJ Type | NVXJ Type | |
| | 42 | Name Label | Not used | XAL3088 | |



http://www.xiaoyu163.com

# 3. SCHEMATIC DIAGRAM

## 3.1 OVERALL WIRING CONNECTION DIAGRAM

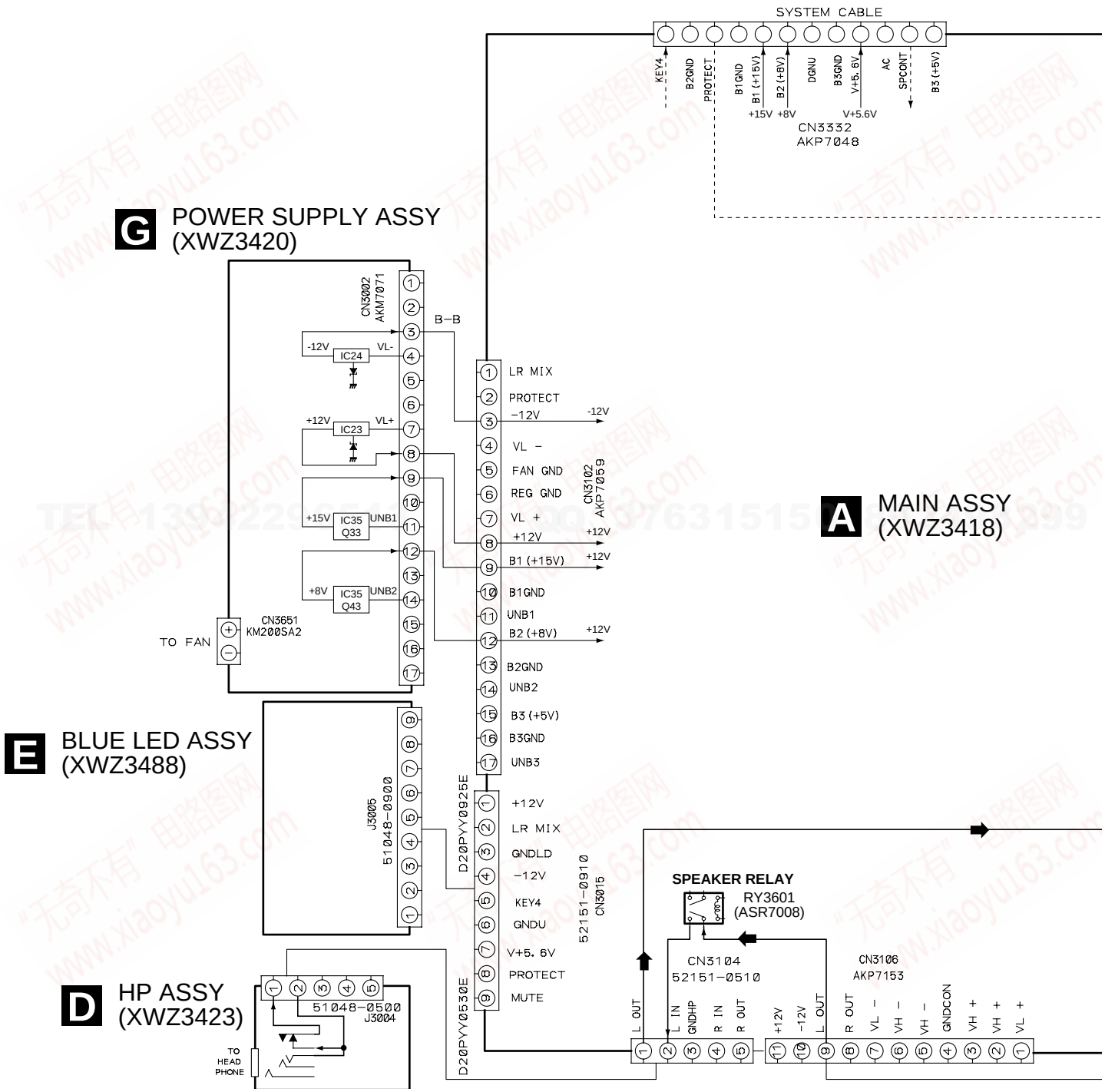




www.xiaoyu163.com

Note : When ordering service parts, be sure to refer to "EXPLODED VIEWS and PARTS LIST" or "PCB PARTS LIST"

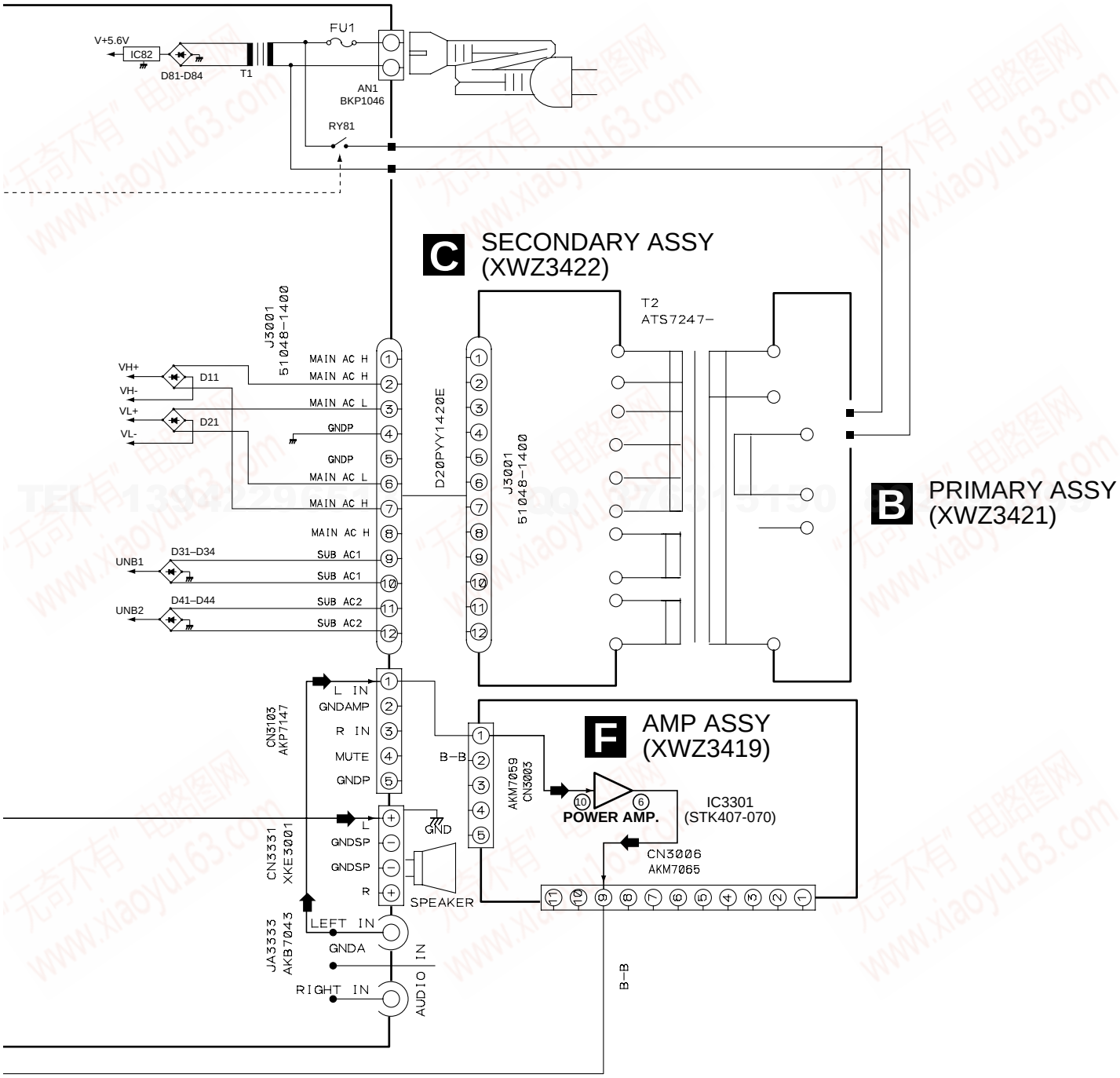




http://www.xiaoyu163.com
www.xiaoyu163.com

http://www.xiaoyu163.com

## 3.2 MAIN, PRIMARY, SECONDARY, HP and BLUE LED ASSYS

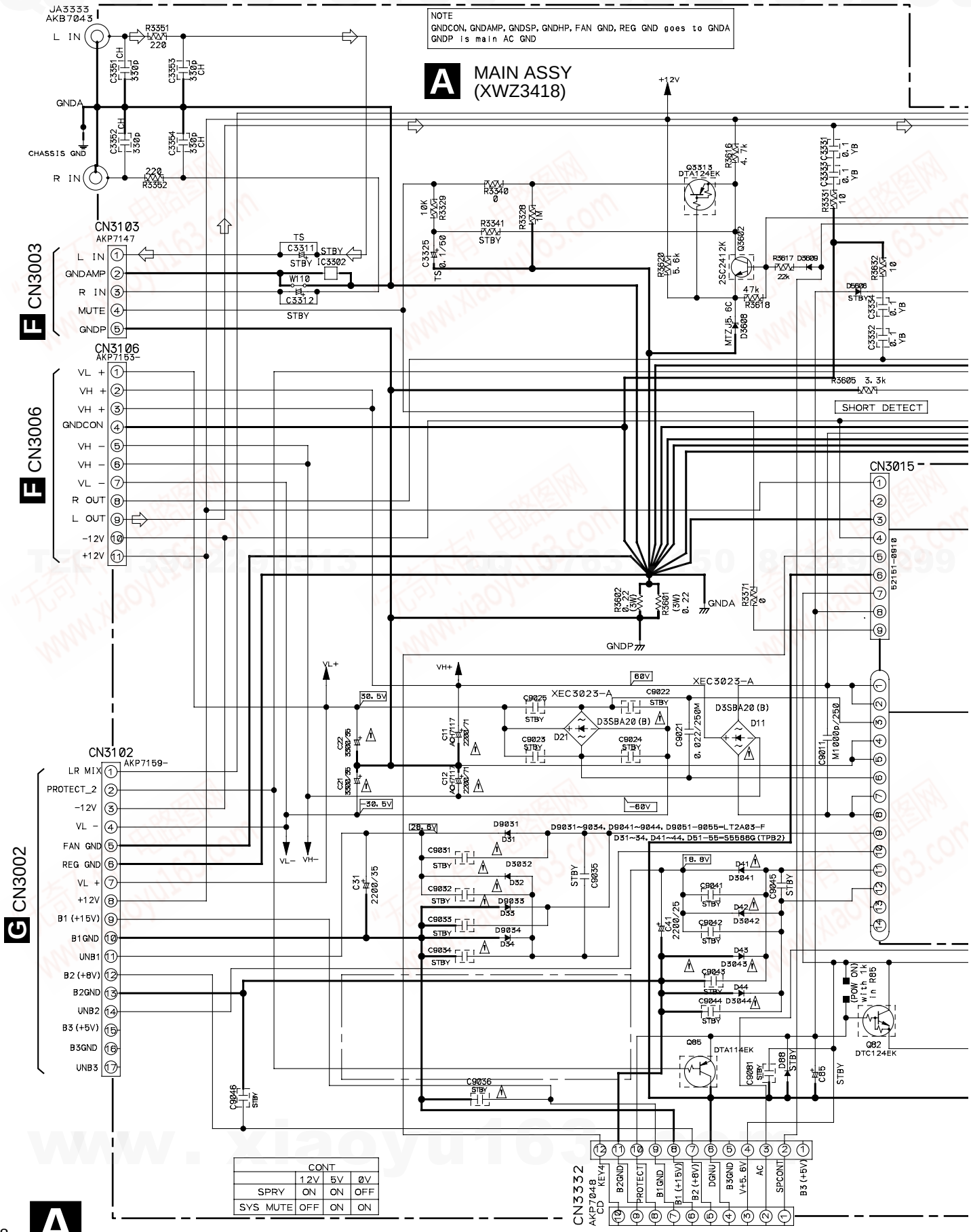




http://www.xiaoyu163.com

http://www.xiaoyu163.com

NOTES
1. RESISTORS Indicated in Ω, 1/10W±5% tolerance unless otherwise noted k:kΩ, M:MΩ.
2. CAPACITORS Indicated in capacity(uF)/voltage(V) unless otherwise noted p:pF.
3. DIODES No mark diode is 1SS133. No mark chip diode is 1SS355.
4. "*" marking parts are as follows.
"*1" marking parts:for MY, NV ass'y.
"*2" marking parts:for DBD, DL ass'y.
"*3" marking parts:for KUC ass'y.

: AUDIO SIGNAL ROUTE

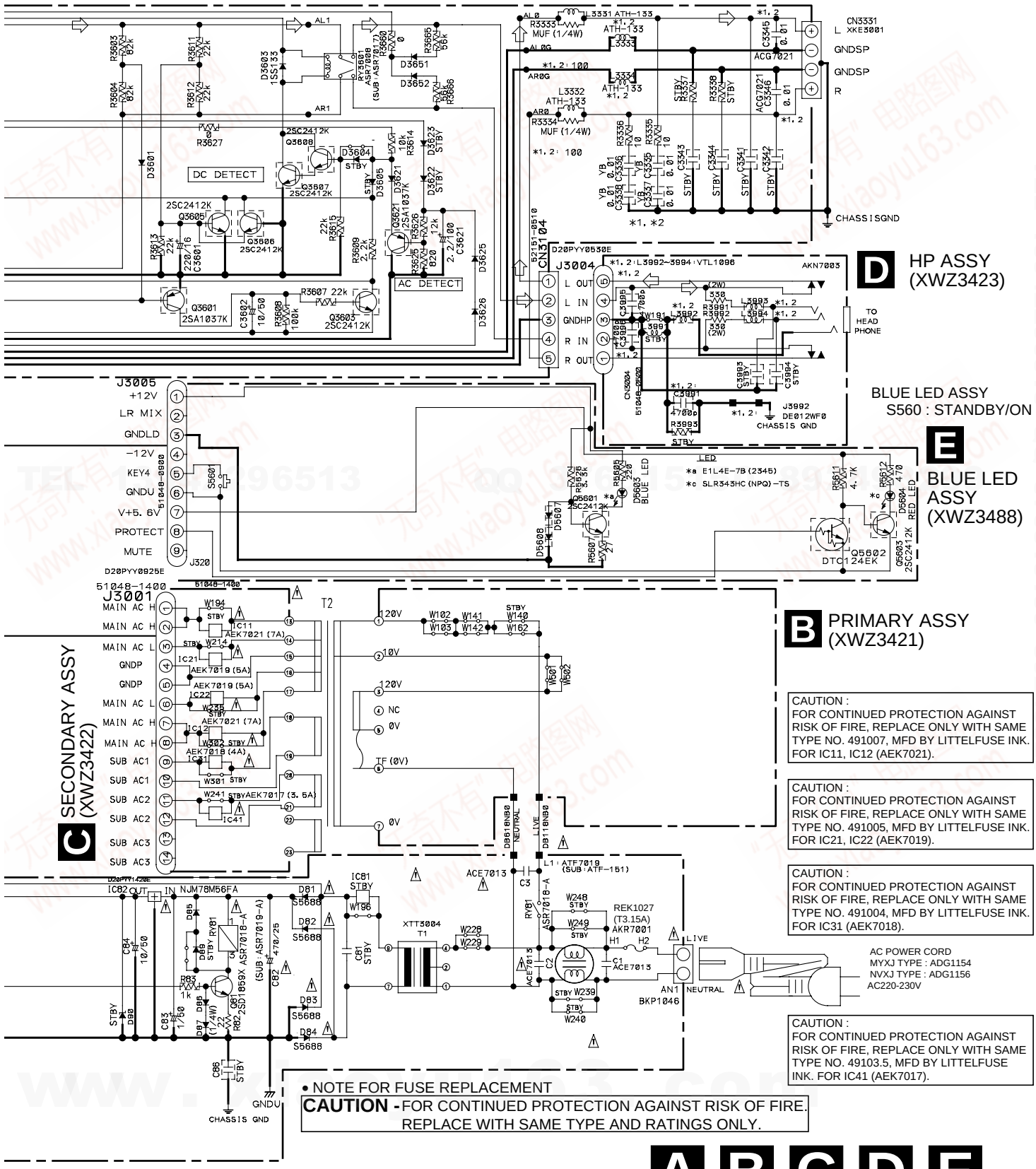


CAUTION :
FOR CONTINUED PROTECTION AGAINST RISK OF FIRE, REPLACE ONLY WITH SAME TYPE NO. 491007, MFD BY LITTELFUSE INK. FOR IC11, IC12 (AEK7021).

CAUTION :
FOR CONTINUED PROTECTION AGAINST RISK OF FIRE, REPLACE ONLY WITH SAME TYPE NO. 491005, MFD BY LITTELFUSE INK. FOR IC21, IC22 (AEK7019).

CAUTION :
FOR CONTINUED PROTECTION AGAINST RISK OF FIRE, REPLACE ONLY WITH SAME TYPE NO. 491004, MFD BY LITTELFUSE INK. FOR IC31 (AEK7018).

CAUTION :
FOR CONTINUED PROTECTION AGAINST RISK OF FIRE, REPLACE ONLY WITH SAME TYPE NO. 49103.5, MFD BY LITTELFUSE INK. FOR IC41 (AEK7017).

• NOTE FOR FUSE REPLACEMENT
**CAUTION -** FOR CONTINUED PROTECTION AGAINST RISK OF FIRE. REPLACE WITH SAME TYPE AND RATINGS ONLY.

A B C D E



http://www.xiaoyu163.com

http://www.xiaoyu163.com

## 3.3 AMP and POWER SUPPLY ASSYS

**F** AMP ASSY (XWZ3419)

⇨ : AUDIO SIGNAL ROUTE

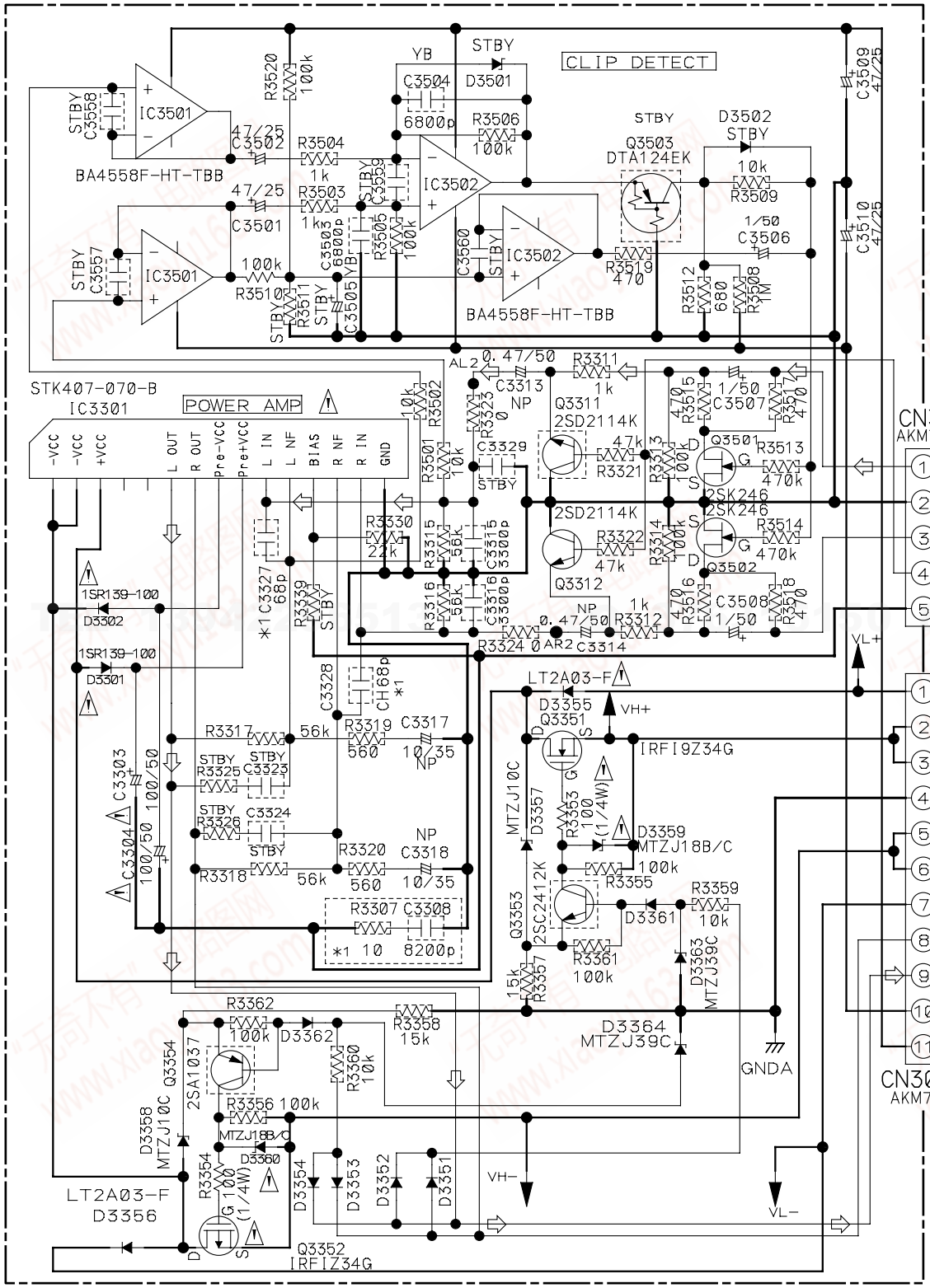




http://www.xiaoyu163.com

http://www.xiaoyu163.com

## G POWER SUPPLY ASSY (XWZ3420)

CAUTION :
FOR CONTINUED PROTECTION AGAINST RISK OF FIRE, REPLACE ONLY WITH SAME TYPE NO. 4911.25, MFD BY LITTELFUSE INK. FOR IC33 (AEK7048).

CAUTION :
FOR CONTINUED PROTECTION AGAINST RISK OF FIRE, REPLACE ONLY WITH SAME TYPE NO. 491002, MFD BY LITTELFUSE INK. FOR IC42 (AEK7067).

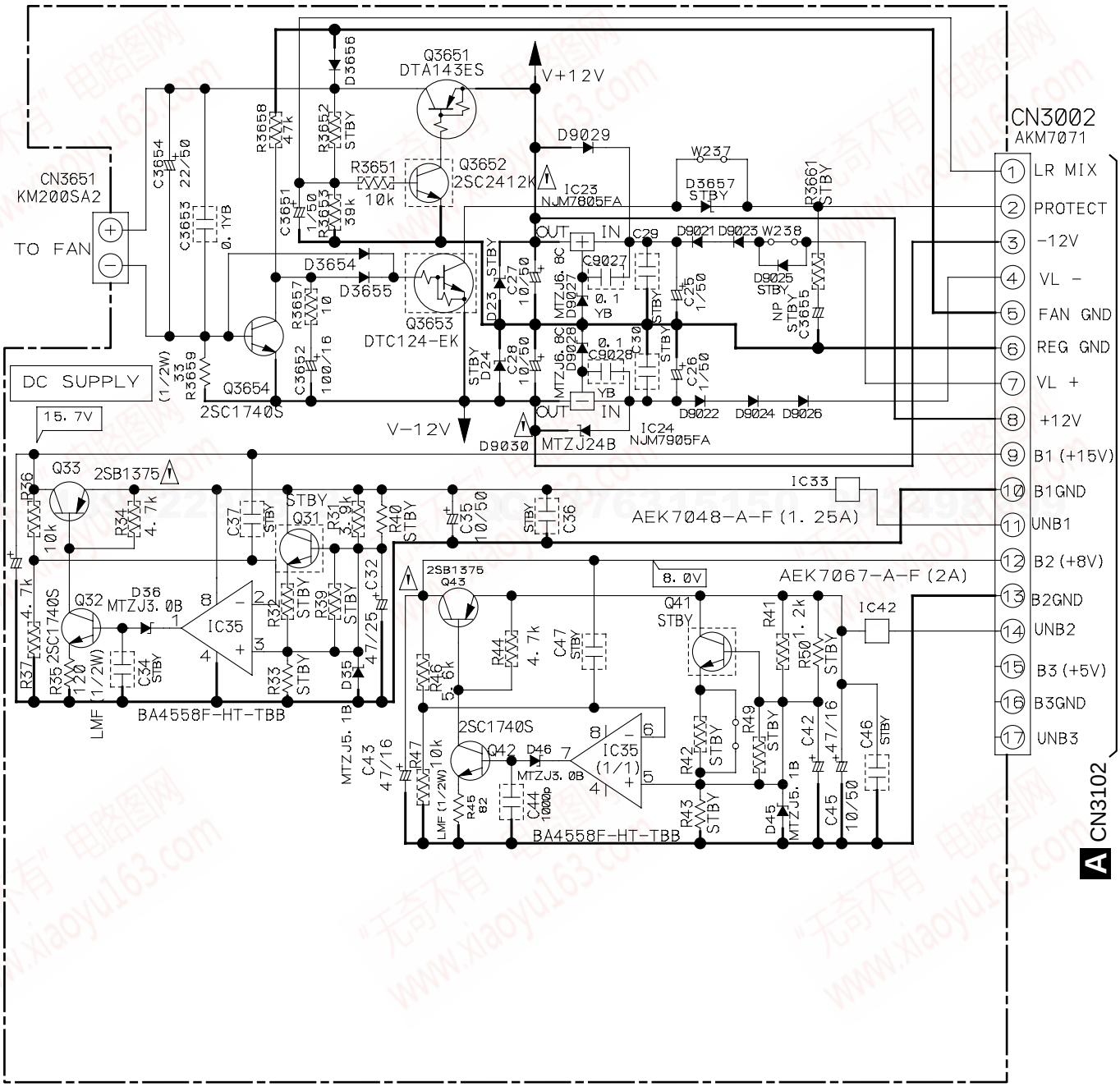


NOTES

1. RESISTORS — Indicated in Ω, 1/16W±5% tolerance unless otherwise noted k:kΩ, M:MΩ.
2. CAPACITORS — Indicated in capacity(uF)/voltage(V) unless otherwise noted p:pF.
3. DIODES — No mark diode is 1SS133.
4. "*" marking parts are as follows.
   "*1" marking parts: for MY, NV ass'y,
   "*2" marking parts: for DBD, DL ass'y,
   "*3" marking parts: for KUC ass'y,



http://www.xiaoyu163.com

# 4. PCB CONNECTION DIAGRAM

**NOTE FOR PCB DIAGRAMS:**

1. Part numbers in PCB diagrams match those in the schematic diagrams.
2. A comparison between the main parts of PCB and schematic diagrams is shown below.

| Symbol in PCB Diagrams | Symbol in Schematic Diagrams | Part Name |
|---|---|---|
| B C E | B C E B C E | Transistor |
| B C E | B C E B C E | Transistor with resistor |
| D G S | D G S D G S | Field effect transistor |
| | | Resistor array |
| | | 3-terminal regulator |

3. The parts mounted on this PCB include all necessary parts for several destination.
   For further information for respective destinations, be sure to check with the schematic diagram.

4. Viewpoint of PCB diagrams

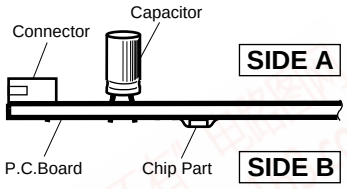


## 4.1 PRIMARY and SECONDARY ASSYS

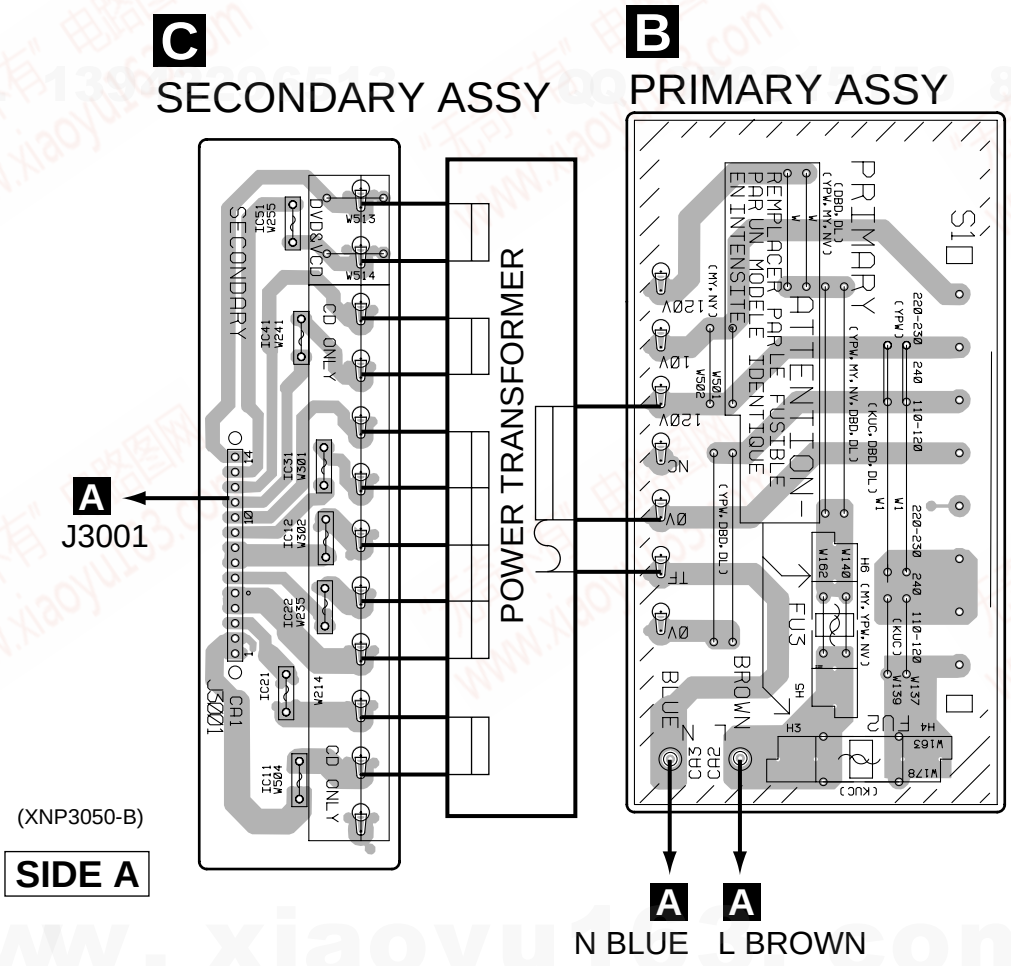

## 4.2 HP and BLUE LED ASSYS

**E**

BLUE LED ASSY

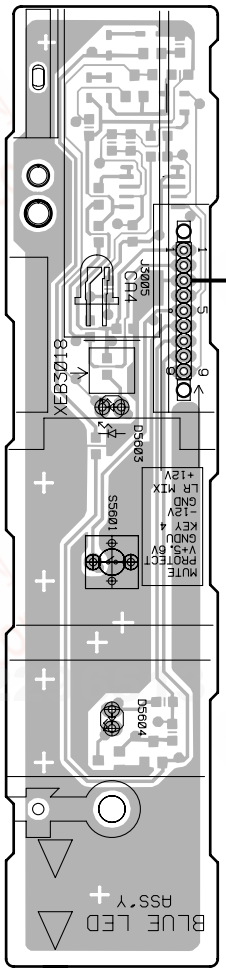


**A** CN3015

**E**

BLUE LED ASSY

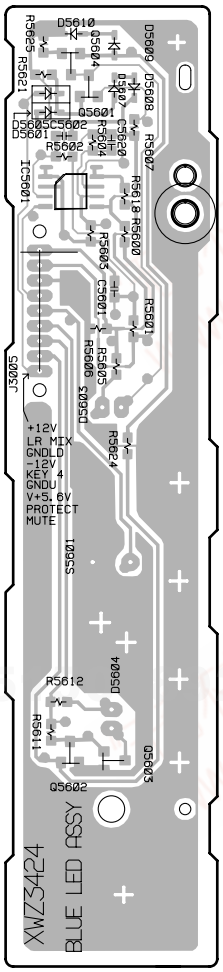


**D**

HP ASSY

**A** CN3104

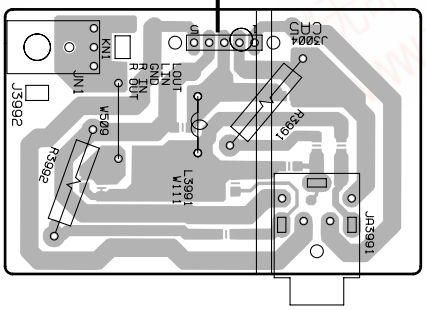


(XNP3050-B)

**SIDE A**

**D**

HP ASSY

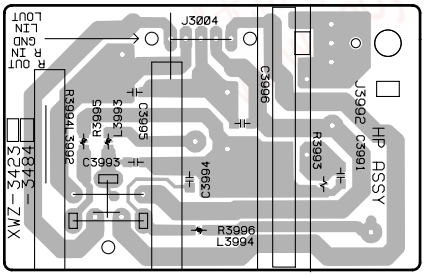


(XNP3050-B)

**SIDE B**

**D E**



http://www.xiaoyu163.com

## 4.3 MAIN ASSY

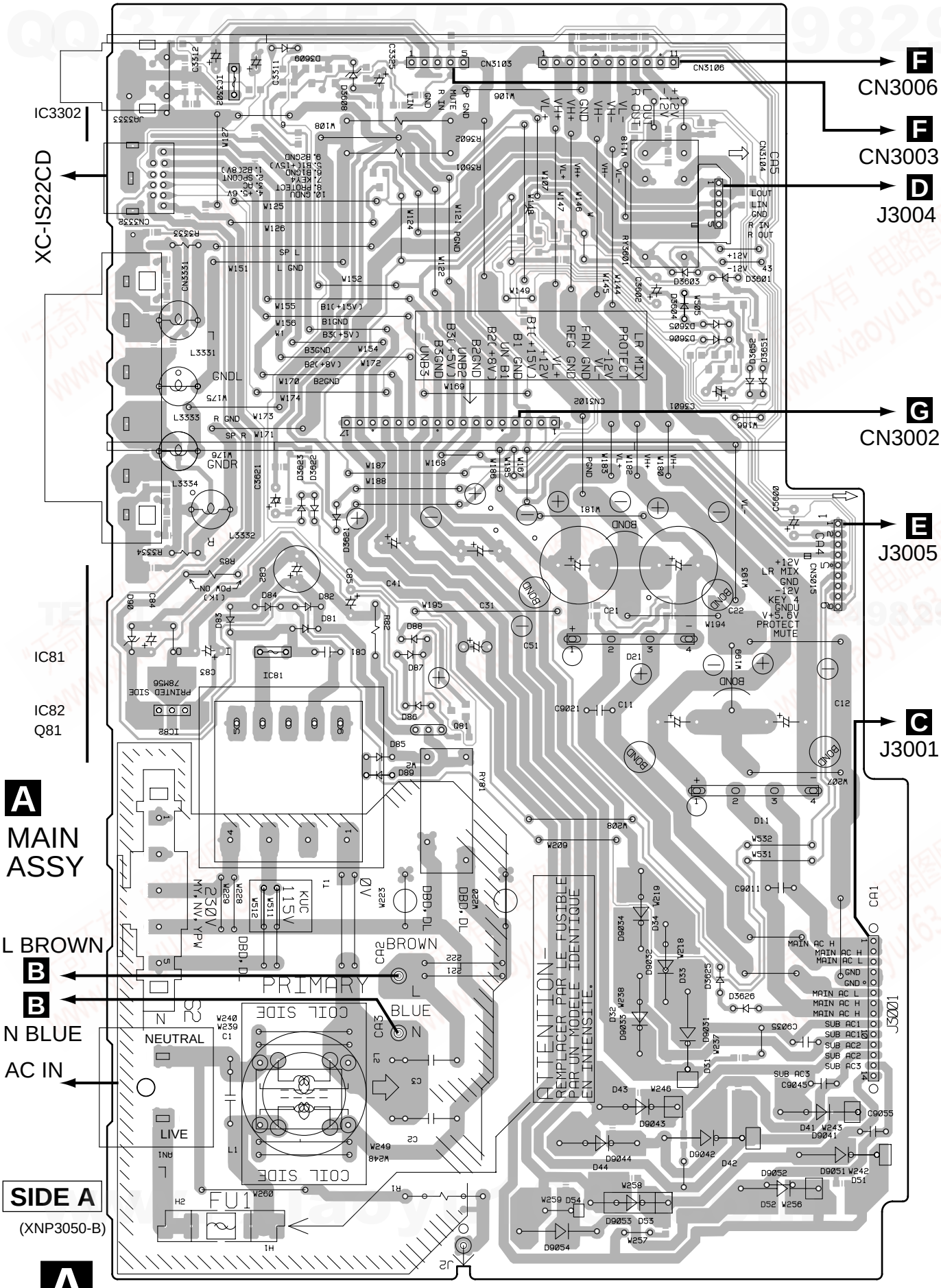
F
CN3006
F
CN3003
D
J3004
G
CN3002
E
J3005
C
J3001
IC3302
XC-IS22CD
IC81
IC82
Q81
A
MAIN ASSY
L BROWN
B
B
N BLUE
AC IN
SIDE A
(XNP3050-B)
PRIMARY
NEUTRAL
LIVE
ATTENTION
REMPLACER PAR LE FUSIBLE PAR UN MODELE IDENTIQUE EN INTENSITE.

**A**

# MAIN ASSY

**SIDE B**

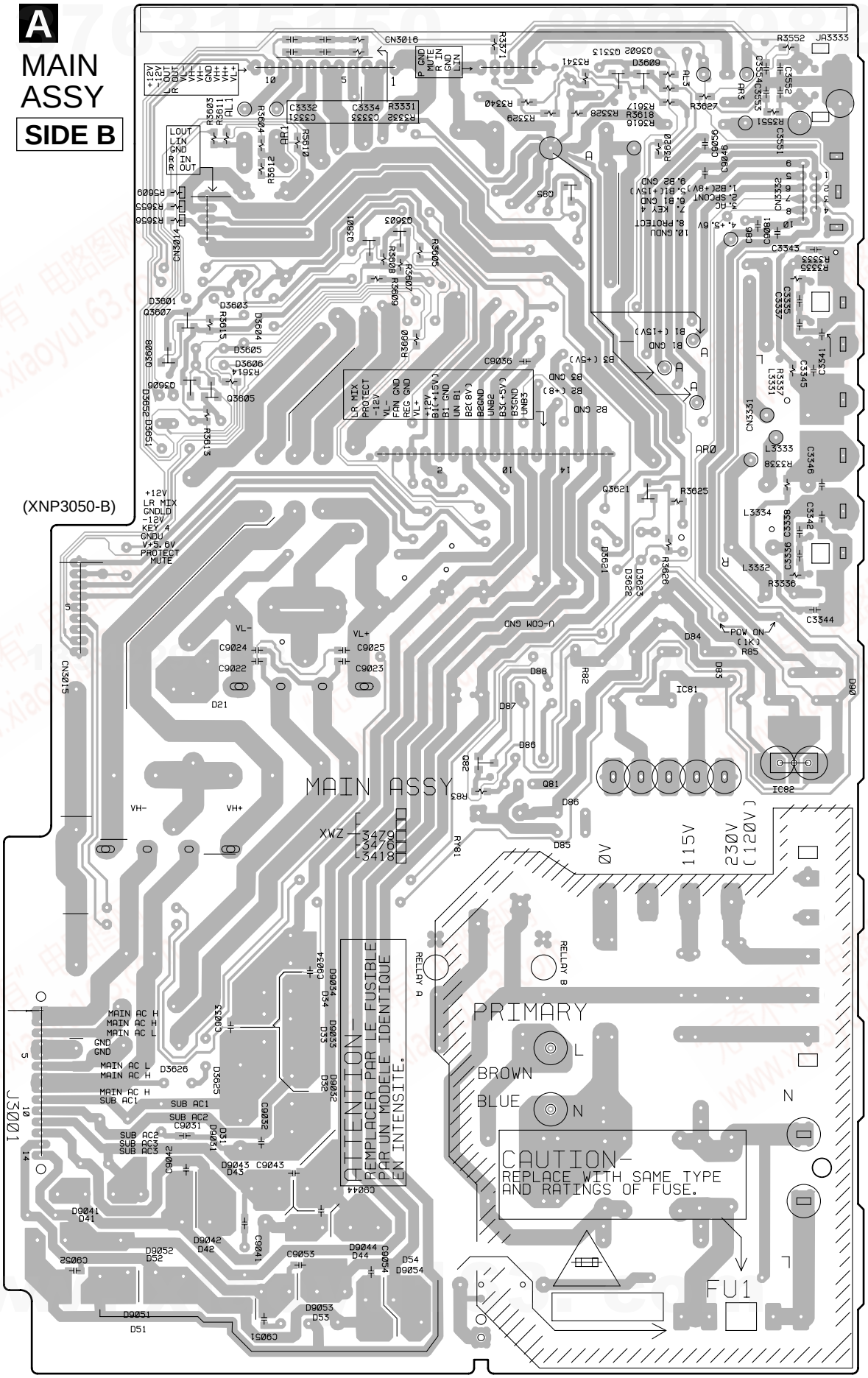

## 4.4 AMP and POWER SUPPLY ASSYS

**G**

POWER SUPPLY ASSY

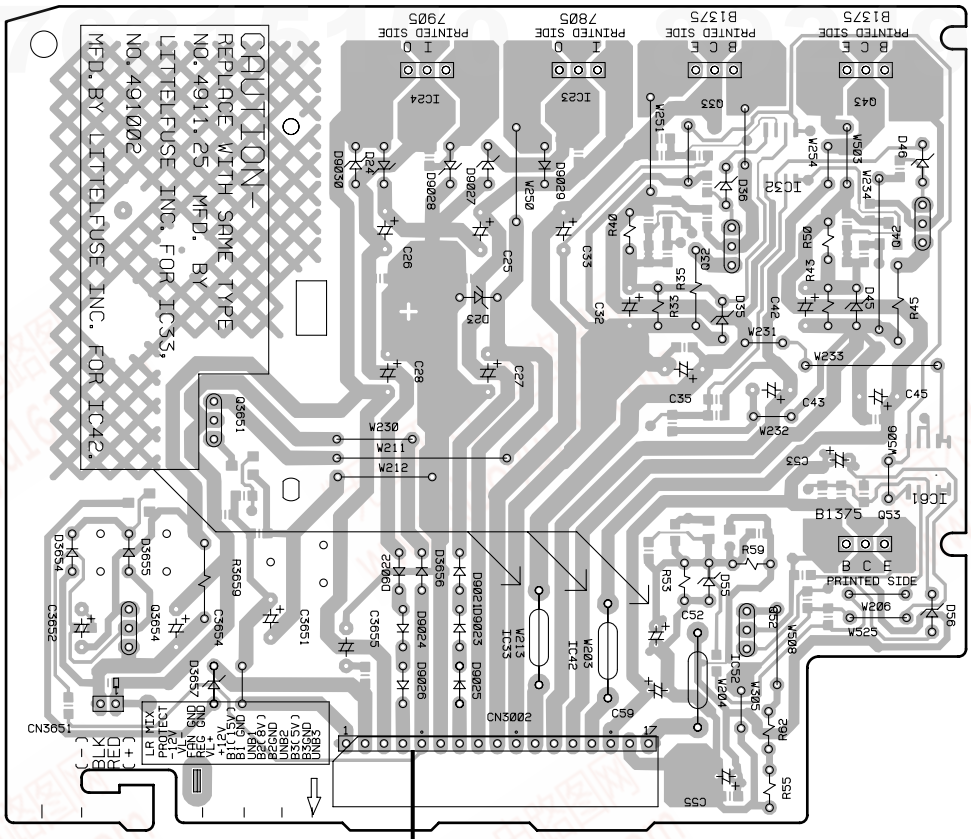


**A** CN3102

**A** CN3106 **A** CN3103

**F**

AMP ASSY

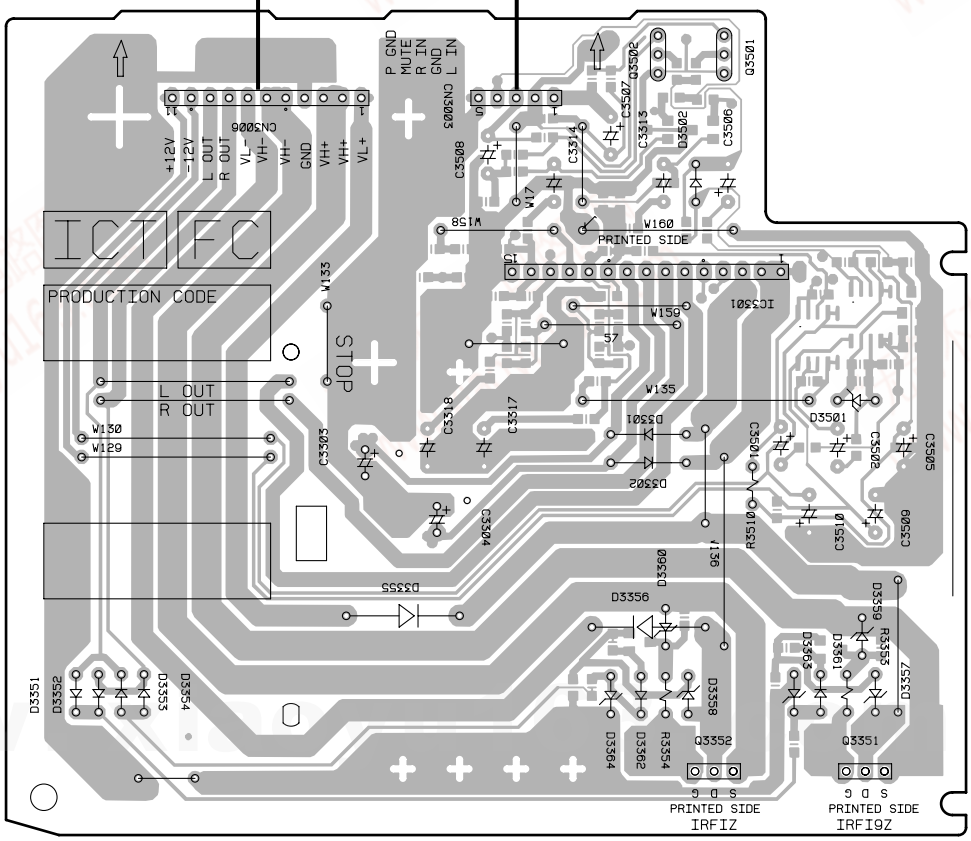


**SIDE A**

(XNP3050-B)

**F** **G**



http://www.xiaoyu163.com

http://www.xiaoyu163.com



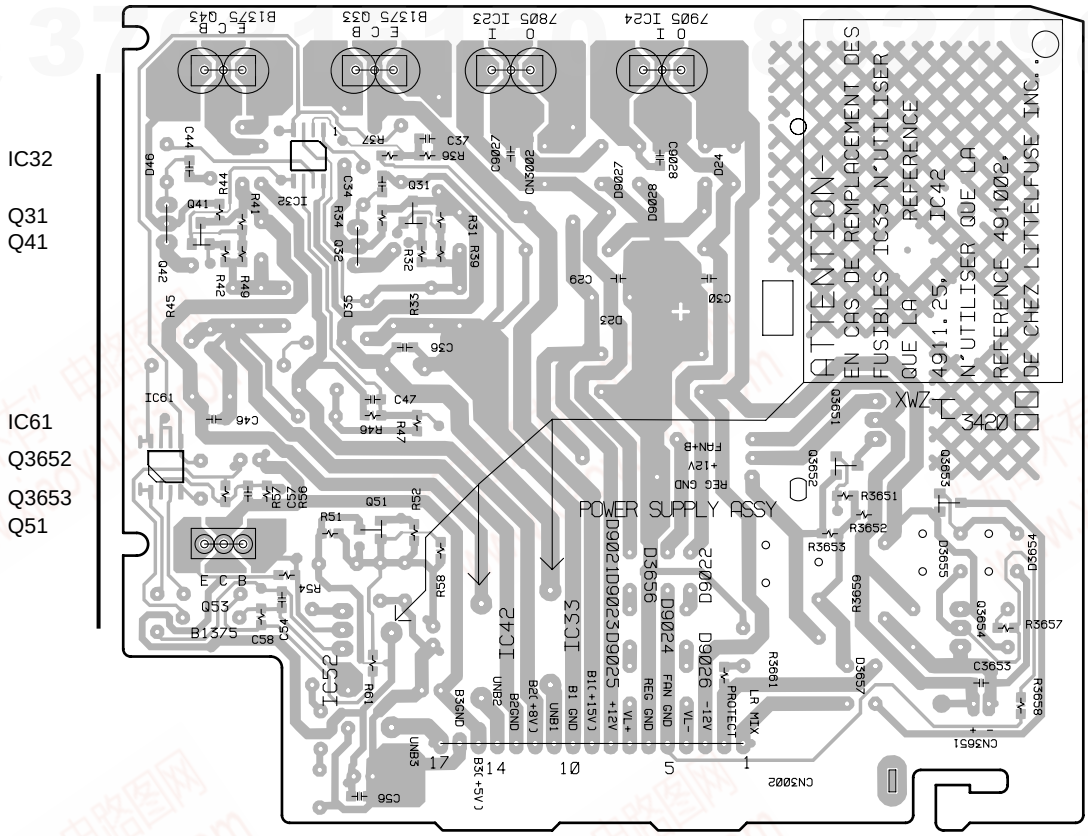


**G**

## POWER SUPPLY ASSY

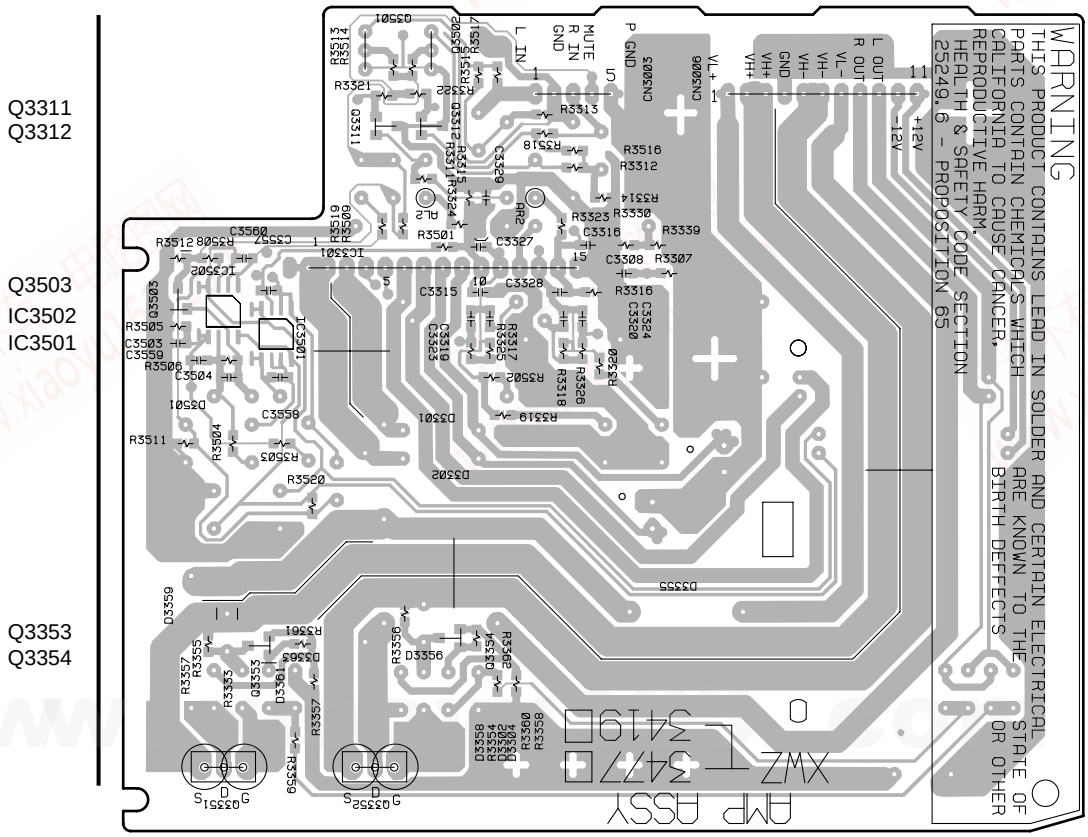


**F**

## AMP ASSY

**SIDE B**

(XNP3050-B)



http://www.xiaoyu163.com

http://www.xiaoyu163.com



# 5. PCB PARTS LIST

*NOTES:*
- *Parts marked by "NSP" are generally unavailable because they are not in our Master Spare Parts List.*
- *The ⚠ mark found on some component parts indicates the importance of the safety factor of the part. Therefore, when replacing, be sure to use parts of identical designation.*
- *When ordering resistors, first convert resistance values into code form as shown in the following examples.*

*Ex.1 When there are 2 effective digits (any digit apart from 0), such as 560 ohm and 47k ohm (tolerance is shown by J=5%, and K=10%).*

| | | | | | |
|---|---|---|---|---|---|
| *560* | → | *56 x $10^1$* | → | *561* | *RD1/4PU[5][6][1]J* |
| *47k* | → | *47 x $10^3$* | → | *473* | *RD1/4PU[4][7][3]J* |
| *0.5* | → | *R50* | | | *RN2H[R][5][0]K* |
| *1* | → | *1R0* | | | *RS1P[1][R][0]K* |

*Ex.2 When there are 3 effective digits (such as in high precision metal film resistors).*

| | | | | | |
|---|---|---|---|---|---|
| *5.62k* | → | *562 x $10^1$* | → | *5621* | *RN1/4PC[5][6][2][1]F* |

| Mark | No. | Description | Part No. |
|---|---|---|---|
| **■ LIST OF ASSEMBLIES** | | | |
| NSP | MAIN ASSY | | XWK3030 |
| NSP | ├ MAIN ASSY | | XWZ3418 |
| NSP | ├ AMP ASSY | | XWZ3419 |
| NSP | ├ POWER SUPPLY ASSY | | XWZ3420 |
| NSP | ├ PRIMARY ASSY | | XWZ3421 |
| NSP | ├ SECONDARY ASSY | | XWZ3422 |
| NSP | ├ HP ASSY | | XWZ3423 |
| NSP | └ BLUE LED ASSY | | XWZ3488 |
| **A MAIN ASSY** | | | |
| **SEMICONDUCTORS** | | | |
| ⚠ | IC82 | | NJM78M56FA |
| | Q3601, Q3621 | | 2SA1037K |
| | Q3602, Q3603, Q3605–Q3608 | | 2SC2412K |
| | Q81 | | 2SD1859X |
| | Q85 | | DTA114TK |
| | Q3313 | | DTA124EK |
| | Q82 | | DTC124EK |
| | D3601, D3603, D3609, D3621 | | 1SS133 |
| | D3625, D3626, D3651, D3652 | | 1SS133 |
| | D85–D87 | | 1SS133 |
| ⚠ | D11, D21 | | D3SBA20(B) |
| | D3608 | | MTZJ5.6C |
| ⚠ | D31–D34, D41–D44 | | S5566G(TPB2) |
| ⚠ | D81–D84 | | S5688G |
| **COILS AND FILTERS** | | | |
| | L1 | LINE FILTER | ATF7019 |
| | L3331–L3334 | (1µH) | ATH-133 |
| **TRANSFORMERS** | | | |
| ⚠ | T1 | STANDBY TRANSFORMER | XTT3004 |
| **SWITCHES AND RELAYS** | | | |
| | RY3601 | SP RELAY/12V | ASR7008 |
| ⚠ | RY81 | | ASR7018 |

| Mark | No. | Description | Part No. |
|---|---|---|---|
| **CAPACITORS** | | | |
| ⚠ | C1–C3 | (10000pF/AC275V) | ACE7013 |
| | C3345, C3346 | (10000pF/100V) | ACG7021 |
| ⚠ | C11, C12 | (2200µF/71v) | ACH7117 |
| | C3551–C3554 | | CCSRCH331J50 |
| | C3602, C84 | | CEAT100M50 |
| | C83 | | CEAT1R0M50 |
| | C3601 | | CEAT221M16 |
| ⚠ | C41 | | CEAT222M25 |
| ⚠ | C31 | | CEAT222M35 |
| | C3621 | | CEAT2R2M2A |
| ⚠ | C21, C22 | | CEAT332M35 |
| ⚠ | C82 | | CEAT471M25 |
| | C3325 | | CEATR10M50 |
| | C3335–C3338 | | CKSRYB103K50 |
| | C3331–C3334 | | CKSRYB104K25 |
| | C9011 | | CQMA102K2E |
| ⚠ | C9021 | | CQMA223K2E |
| **RESISTORS** | | | |
| | R3333, R3334 | | RD1/4MUF101J |
| | R82 | | RD1/4PU220J |
| | R3601, R3602 | | RS3LMFR22J |
| | Other Resistors | | RS1/16S□□□J |
| **OTHERS** | | | |
| ⚠ | CN3015 | 9P JUMPER CONNECTOR | 52151-0910 |
| | JA3333 | 2P PIN JACK | AKB7043 |
| ⚠ | CN3332 | 10P SOCKET | AKP7048 |
| ⚠ | CN3103 | 5P CONNECTOR SOCKET | AKP7147 |
| ⚠ | CN3106 | 14P SOCKET | AKP7153 |
| ⚠ | CN3102 | 17P CONNECTOR SOCKET | AKP7159 |
| | H1, H2 | FUSE CLIP | AKR7001 |
| ⚠ | AN1 | AC INLET 1P | BKP1046 |
| | J3001 | JUMPER WIRE | D20PYY1420E |
| | | BARRIER CAP | XEC3023 |
| | CN3331 | 4P SPEAKER TERMINAL | XKE3001 |



http://www.xiaoyu163.com

http://www.xiaoyu163.com



| Mark | No. | Description | Part No. |
|---|---|---|---|

## B PRIMARY ASSY

PRIMARY assembly has no service part.

## C SECONDARY ASSY

### SEMICONDUCTORS

| | | | |
|---|---|---|---|
| ⚠ | IC41 | PROTECTOR(3.5A) | AEK7017 |
| ⚠ | IC31 | PROTECTOR(4A) | AEK7018 |
| ⚠ | IC21, IC22 | PROTECTOR(5A) | AEK7019 |
| ⚠ | IC11, IC12 | PROTECTOR(7A) | AEK7021 |

## D HP ASSY

### COILS AND FILTERS

| | | | |
|---|---|---|---|
| | L3992–L3994 | CHIP BEADS | VTL1096 |

### CAPACITORS

| | | | |
|---|---|---|---|
| | C3991, C3995, C3996 | | CKSRYB472K50 |

### RESISTORS

| | | | |
|---|---|---|---|
| | R3991, R3992 | | RS2LMF331J |

### OTHERS

| | | | |
|---|---|---|---|
| | 3004 | 5P CABLE HOLDER | 51048-0500 |
| | 3991 | MINI JACK | AKN7003 |
| | J3004 | 5P JUMPER WIRE | D20PYY0530E |

## E BULE LED ASSY

### SEMICONDUCTORS

| | | | |
|---|---|---|---|
| | Q5601, Q5603 | | 2SC2412K |
| | Q5602 | | DTC124EK |
| | D5607, D5608 | | 1SS355 |
| | D5603 | | E1L4E-7B1A(2345) |
| | D5604 | | SLR-343VC(NPQ) |

### SWITCHES AND RELAYS

| | | | |
|---|---|---|---|
| | S5601 | | ASG7013 |

### RESISTORS

| | | | |
|---|---|---|---|
| | R5626 | | RD1/4PU332J |
| | Other Resistors | | RS1/16S□□□J |

### OTHERS

| | | | |
|---|---|---|---|
| | 302 | 9P CABLE HOLDER | 51048-0900 |
| | J3005 | JUMPER WIRE | D20PYY0925E |
| | | LED SPACER | XEB3018 |

| Mark | No. | Description | Part No. |
|---|---|---|---|

## F AMP ASSY

### SEMICONDUCTORS

| | | |
|---|---|---|
| | IC3501, IC3502 | BA4558F-HT |
| ⚠ | IC3301 | STK407-070B |
| | Q3354 | 2SA1037K |
| | Q3353 | 2SC2412K |
| | Q3311, Q3312 | 2SD2114K |
| | Q3501, Q3502 | 2SK246 |
| | Q3503 | DTA124EK |
| ⚠ | Q3351 | IRFI9Z34G |
| ⚠ | Q3352 | IRFIZ34G |
| ⚠ | D3301, D3302 | 1SR139-100 |
| | D3351–D3354, D3361, D3362 | 1SS133 |
| ⚠ | D3355, D3356 | LT2A03 |
| | D3357, D3358 | MTZJ10C |
| ⚠ | D3359, D3360 | MTZJ18B |
| | D3363, D3364 | MTZJ39C |

### CAPACITORS

| | | |
|---|---|---|
| | C3327, C3328 | CCSRCH680J50 |
| | C3317, C3318 | CEANP100M35 |
| | C3313, C3314 | CEANPR47M50 |
| ⚠ | C3303, C3304 | CEAT101M50 |
| | C3506–C3508 | CEAT1R0M50 |
| | C3501, C3502, C3509, C3510 | CEAT470M25 |
| | C3315, C3316 | CKSRYB332K50 |
| | C3503, C3504 | CKSRYB682K50 |
| | C3308 | CKSRYB822K50 |

### RESISTORS

| | | |
|---|---|---|
| | R3353, R3354 | RD1/4PU101J |
| | R3510 | RD1/4PU104J |
| | Other Resistors | RS1/16S□□□J |

### OTHERS

| | | | |
|---|---|---|---|
| ⚠ | CN3003 | 5P CONNECTOR PLUG | AKM7059 |
| ⚠ | CN3006 | 11P CONNECTOR PLUG | AKM7065 |

## G POWER SUPPLY ASSY

### SEMICONDUCTORS

| | | | |
|---|---|---|---|
| ⚠ | IC33 | PROTECTOR(1.25A) | AEK7048 |
| ⚠ | IC42 | PROTECTOR(2A) | AEK7067 |
| | IC32 | | BA4558F-HT |
| ⚠ | IC23 | | NJM7805FA |
| ⚠ | IC24 | | NJM7905FA |
| ⚠ | Q33, Q43 | | 2SB1375 |
| | Q32, Q3654, Q42 | | 2SC1740S |
| | Q3652 | | 2SC2412K |
| | Q3651 | | DTA143ES |
| | Q3653 | | DTC124EK |



http://www.xiaoyu163.com

http://www.xiaoyu163.com



| Mark | No. | Description | Part No. |
|---|---|---|---|
| | D3654–D3656, D9021–D9024, D9026 | | 1SS133 |
| | D9029 | | 1SS133 |
| | D9030 | | MTZJ24B |
| | D36, D46 | | MTZJ3.0B |
| | D35, D45 | | MTZJ5.1B |
| | D9027, D9028 | | MTZJ6.8C |
| **CAPACITORS** | | | |
| | C27, C28, C35, C45 | | CEAT100M50 |
| | C3652 | | CEAT101M16 |
| | C25, C26, C3651 | | CEAT1R0M50 |
| | C3654 | | CEAT220M50 |
| | C42, C43 | | CEAT470M16 |
| | C32, C33 | | CEAT470M25 |
| | C44 | | CKSRYB102K50 |
| | C3653, C9027, C9028 | | CKSRYB104K25 |
| **RESISTORS** | | | |
| | R35 | | RD1/2LMF121J |
| | R45 | | RD1/2LMF820J |
| | R3659 | | RD1/2PM330J |
| | Other Resistors | | RS1/16S□□□J |
| **OTHERS** | | | |
| | CN3002 | 17P CONNECTOR PLUG | AKM7071 |
| | CN3651 | 2P PLUG | KM200SA2 |

# 6. ADJUSTMENT

There is no information to be shown in this chapter.



http://www.xiaoyu163.com

http://www.xiaoyu163.com



# 7. GENERAL INFORMATION

## 7.1 SINGLE OPERATION METHOD

### Single operation method and inputlevel.

The procedure and the input level of a single operation are shown below.

1. R85 are shorted by 1kΩ.
2. A point of the figure below in four places is connected.

   GND is not common because it is independent with chassis GND (GND of the amplifier), B1GND, B2GND, and B3GND.

   The potential of B1GND, B2GND, and B3GND is done by connecting A point in four places as well as chassis GND.
2. The power supply of the product is turned on.
3. The terminal CONT (2 pin of CN3332) are controlled respectively by the following voltages.

| | CONT | | |
|---|---|---|---|
| | 12V | 5V | 0V |
| RY | ON | ON | OFF |
| MUTE | OFF | ON | ON |

4. The signal of 10mV is input from input terminal (JA3333), and the output is confirmed with speaker terminal (CN3331).

   Note : If the music signal is input directly to input terminal (JA3333) with CD PLAYER etc. , the output becomes a large volume because there are 40dB GAIN of the amplifier.

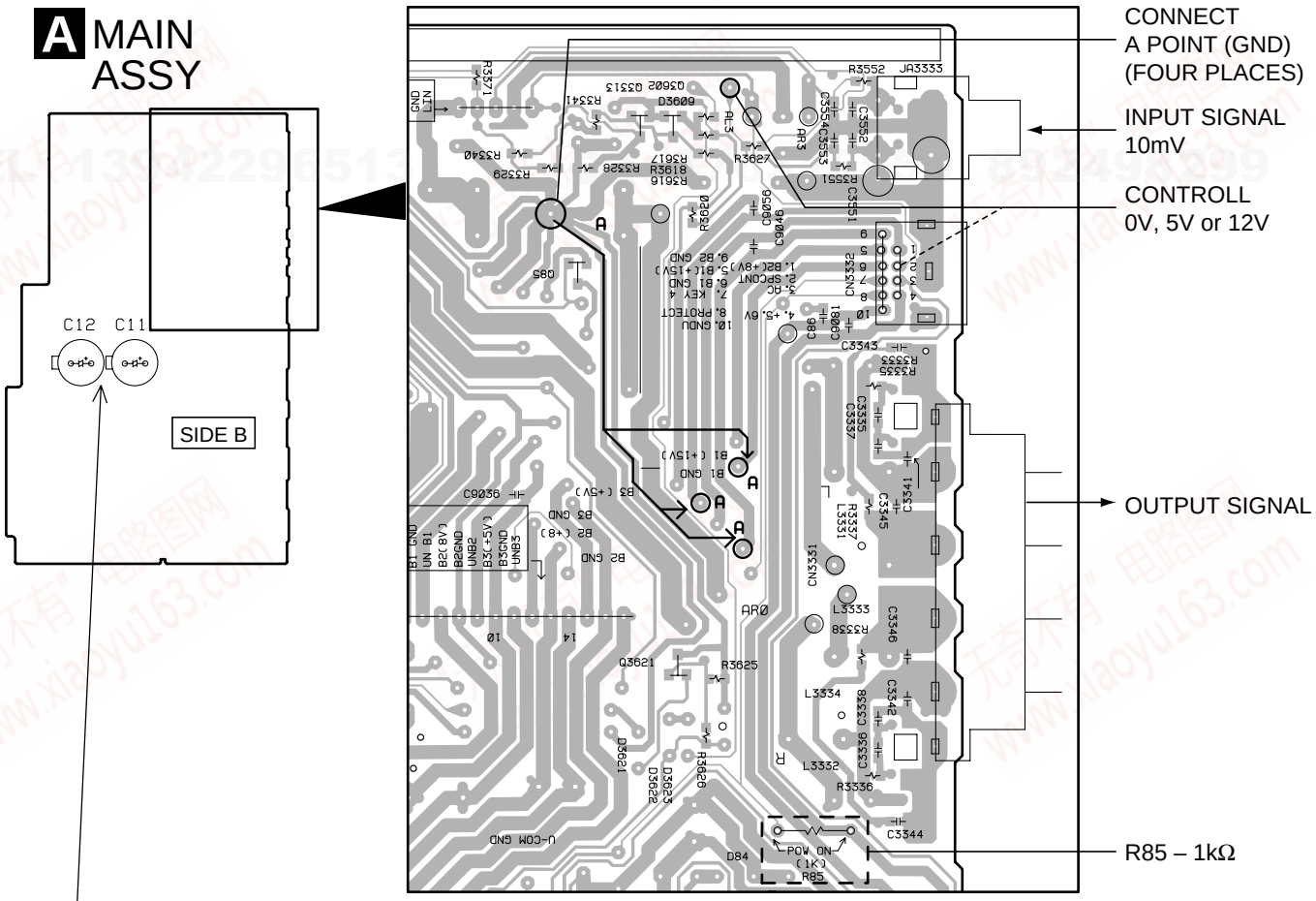


Caution when disassemble.
Even if the power supply code is pulled out from the outlet, neither C11 nor C12 of AF ASSY are discharged.
Please discharge C11 and C12 of AF ASSY by the resistor of 100 Ω or more before removing AF ASSY or POWER SUPPLY ASSY.
There is a possibility to destroy the transistor, and Please discharge by the resistor of 100 Ω or more.



http://www.xiaoyu163.com

http://www.xiaoyu163.com



# 8. PANEL FACILITIES AND SPECIFICATIONS

## ● PANEL FACILITIES

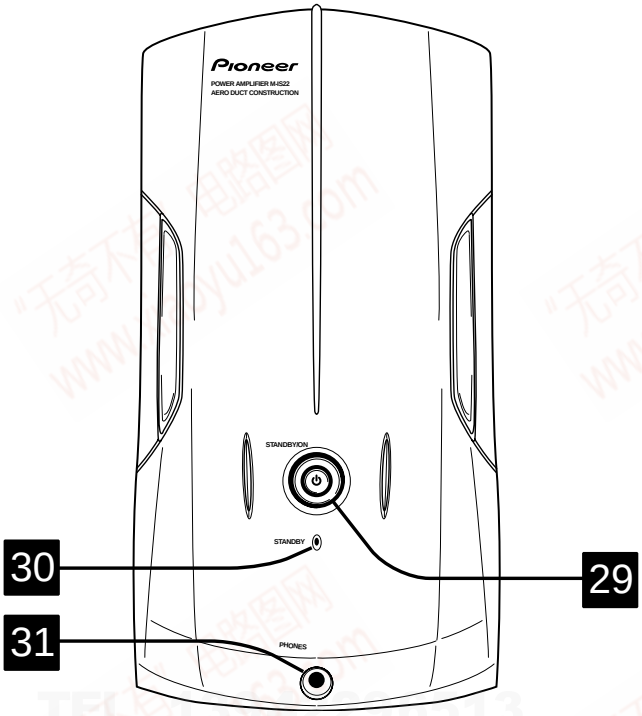


**29 STANDBY/ON**
**30 Standby indicator**
**31 Headphone jack**

## ● SPECIFICATIONS

### Amplifier section

Continuous Power (RMS) ..... 100 W + 100 W (1 kHz, THD 10%, 6 Ω)
Continuous Power (DIN) ..... 65 W + 65 W (1 kHz, THD 1%, 6 Ω)
Music Power (DIN) ..... 150 W + 150 W (1 kHz, THD 1%, 6 Ω)

### Miscellaneous

Power Requirements ..... AC 220-230 V, 50/60 Hz
Power Consumption ..... 140 W
Power Consumption in standby mode ..... 1 W

**Dimensions:**
Power Amplifier . 160 (W) x 300 (H) x 237 (D) mm

**Weight:**
Power Amplifier ..... 4.1 kg

### Accessories

Power cord (MYXJ Type) ..... 1
System cable ..... 1
RCA pin-plug stereo cable ..... 1

**Note**
Specifications and design subject to possible modification without notice, due to improvements.



http://www.xiaoyu163.com