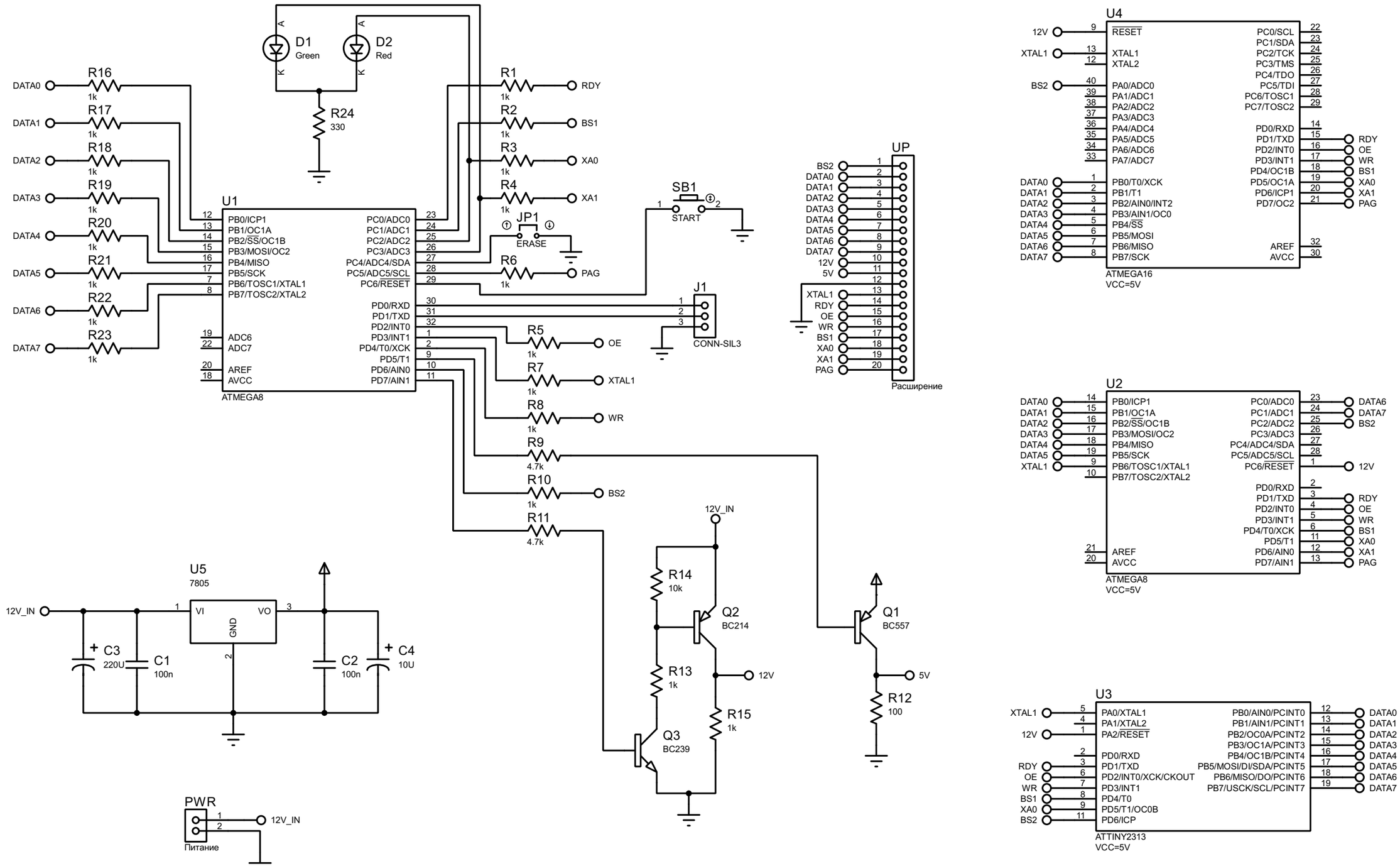

FILE NAME: AVR Doctor.pdsprj	DATE: 20.08.2017
DESIGN TITLE: AVR Doctor.pdsprj	PAGE: 1 of 1
PATH: D:\Proteus\AVR Doctor\AVR Doctor.pdsprj	
BY: @AUTHOR REV:@REV	TIME: 16:35:07