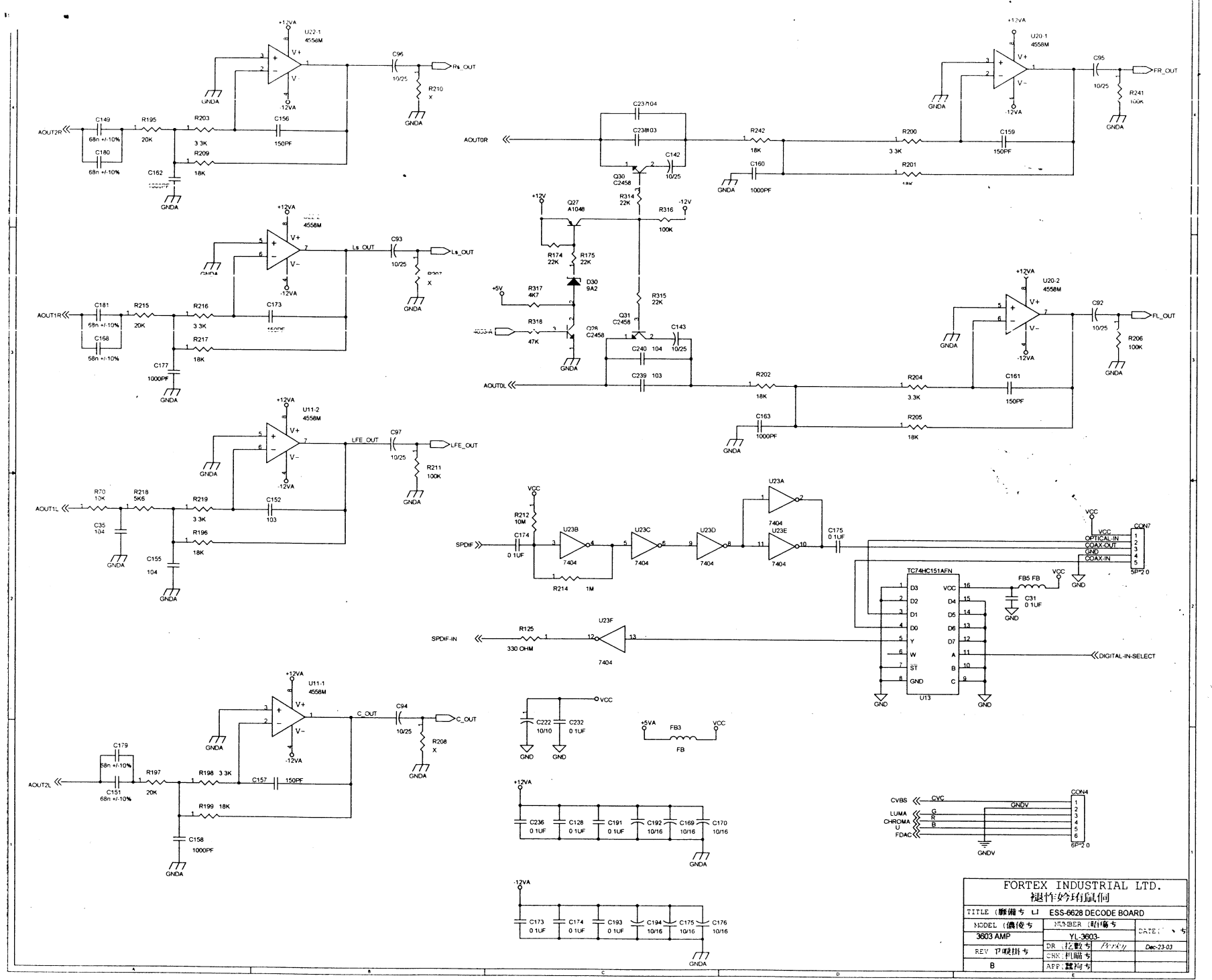
U22-1
4558M
+12VA
-12VA
V+
V-
GNDA
C96
10/25
Rs_OUT
R210
x
AOUT2R
C149
68n +/-10%
C180
68n +/-10%
R195
20K
R203
3.3K
C156
150PF
R209
18K
C162
1000PF
U20-1
4558M
C95
10/25
FR_OUT
R241
100K
AOUT0R
C237 104
C238 103
C142
10/25
Q30
C2458
R242
18K
R200
3.3K
C159
150PF
R201
18K
C160
1000PF
R314
22K
R316
100K
Q27
A1048
R174
22K
R175
22K
D30
9A2
R317
4K7
R318
47K
Q28
C2458
R315
22K
Q31
C2458
C143
C240 104
10/25
C239 103
AOUT0L
R202
18K
R204
3.3K
C161
150PF
R205
18K
C163
1000PF
U20-2
4558M
C92
10/25
FL_OUT
R206
100K
Ls_OUT
C93
10/25
Ls_OUT
R207
x
AOUT1R
C181
68n +/-10%
C168
68n +/-10%
R215
20K
R216
3.3K
C173
150PF
R217
18K
C177
1000PF
U11-2
4558M
LFE_OUT
C97
10/25
LFE_OUT
R211
100K
AOUT1L
R70
10K
R218
5K6
R219
3.3K
C152
103
R196
18K
C35
104
C155
104
VCC
R212
10M
C174
0.1UF
SPDIF
U23B
7404
U23C
7404
U23D
7404
U23A
7404
U23E
7404
C175
0.1UF
R214
1M
CON7
OPTICAL-IN
COAX-OUT
GND
COAX-IN
5P*2.0
TC74HC151AFN
U13
D3
D2
D1
D0
Y
W
ST
GND
VCC
D4
D5
D6
D7
A
B
C
FB5 FB
C31
0.1UF
DIGITAL-IN-SELECT
SPDIF-IN
R125
330 OHM
U23F
7404
U11-1
4558M
C_OUT
C94
10/25
C_OUT
R208
x
AOUT2L
C179
68n +/-10%
C151
68n +/-10%
R197
20K
R198 3.3K
C157
150PF
R199 18K
C158
1000PF
C222
10/10
C232
0.1UF
+5VA
FB3
FB
C236
0.1UF
C128
0.1UF
C191
0.1UF
C192
10/16
C169
10/16
C170
10/16
C173
0.1UF
C174
0.1UF
C193
0.1UF
C194
10/16
C175
10/16
C176
10/16
CVBS
CVC
LUMA
CHROMA
U
FDAC
G
R
B
GNDV
CON4
6P*2.0
FORTEX INDUSTRIAL LTD.
TITLE
ESS-6628 DECODE BOARD
MODEL
3603 AMP
NUMBER
YL-3603-
REV
B
DR
Dec-23-03
CHK
APP

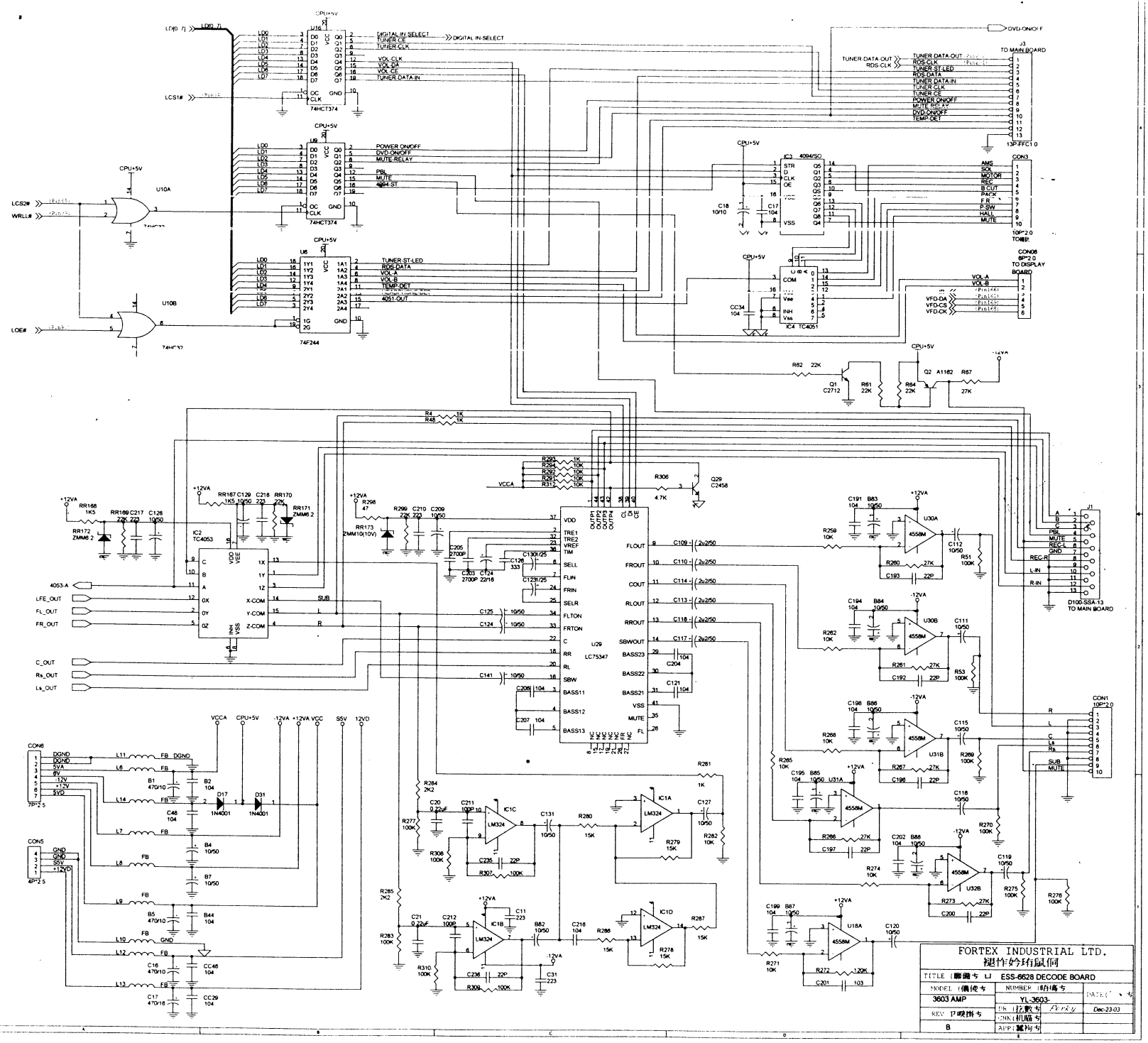
U16
74HCT374
DIGITAL-IN-SELECT
TUNER-CE
TUNER-CLK
VOL-CLK
VOL-DA
VOL-CE
TUNER-DATA-IN
U9
POWER ON/OFF
DVD-ON/OFF
MUTE-RELAY
PBL
MUTE
4094-ST
U6
74F244
TUNER-ST-LED
RDS-DATA
VOL-A
VOL-B
TEMP-DET
4051-OUT
U10A
U10B
LCS2#
WRLL#
LOE#
LCS1#
LD[0..7]
CPU+5V
DVD-ON/OFF
J3
TO MAIN BOARD
TUNER-DATA-OUT
RDS-CLK
TUNER-ST-LED
RDS-DATA
TUNER-DATA-IN
TUNER-CLK
TUNER-CE
POWER ON/OFF
MUTE-RELAY
DVD-ON/OFF
TEMP-DET
13P-FFC1.0
IC3 4094/SO
CON3
AMS
SOL
MOTOR
REC
B CUT
PACK
F.R
P.SW
HALL
MUTE
10P*2.0
IC4 TC4051
CON08
8P*2.0
TO DISPLAY BOARD
VFD-DA
VFD-CS
VFD-CK
Q1 C2712
Q2 A1162
Q29 C2456
IC2 TC4053
4053-A
LFE_OUT
FL_OUT
FR_OUT
C_OUT
Rs_OUT
Ls_OUT
U29 LC75347
FLOUT
FROUT
COUT
RLOUT
RROUT
SBWOUT
BASS23
BASS22
BASS21
MUTE
FL
SELL
FLIN
FRIN
SELR
FLTON
FRTON
BASS11
BASS12
BASS13
J1
D100-SSA-13
TO MAIN BOARD
PBL
MUTE
REC-L
GND
REC-R
L-IN
R-IN
U30A
U30B
U31A
U31B
U32B
U18A
4558M
CON1
10P*2.0
SUB
MUTE
CON6
7P*2.5
CON5
4P*2.5
DGND
5VA
8V
-12V
+12V
5VD
VCCA
CPU+5V
-12VA
+12VA
VCC
5SV
12VD
IC1A
IC1B
IC1C
IC1D
LM324
FORTEX INDUSTRIAL LTD.
TITLE ESS-6628 DECODE BOARD
MODEL 3603 AMP
NUMBER YL-3603
REV B
DATE Dec-23-03

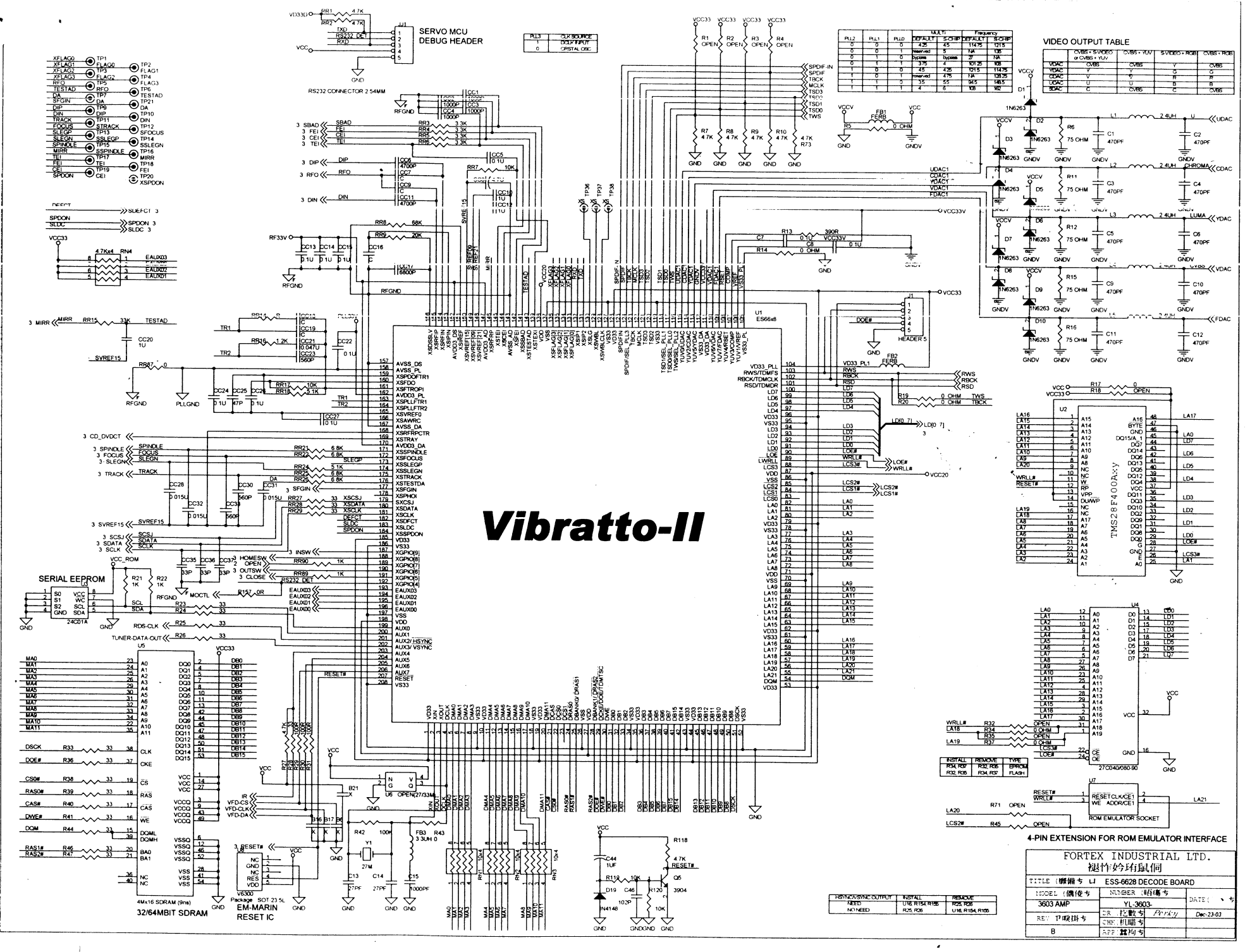
SERVO MCU DEBUG HEADER
RS232 CONNECTOR 2 54MM
VIDEO OUTPUT TABLE
Vibratto-II
SERIAL EEPROM
32/64MBIT SDRAM
EM-MARIN RESET IC
4-PIN EXTENSION FOR ROM EMULATOR INTERFACE
FORTEX INDUSTRIAL LTD.
ESS-6628 DECODE BOARD
3603 AMP
YL-3603-
Dec-23-03

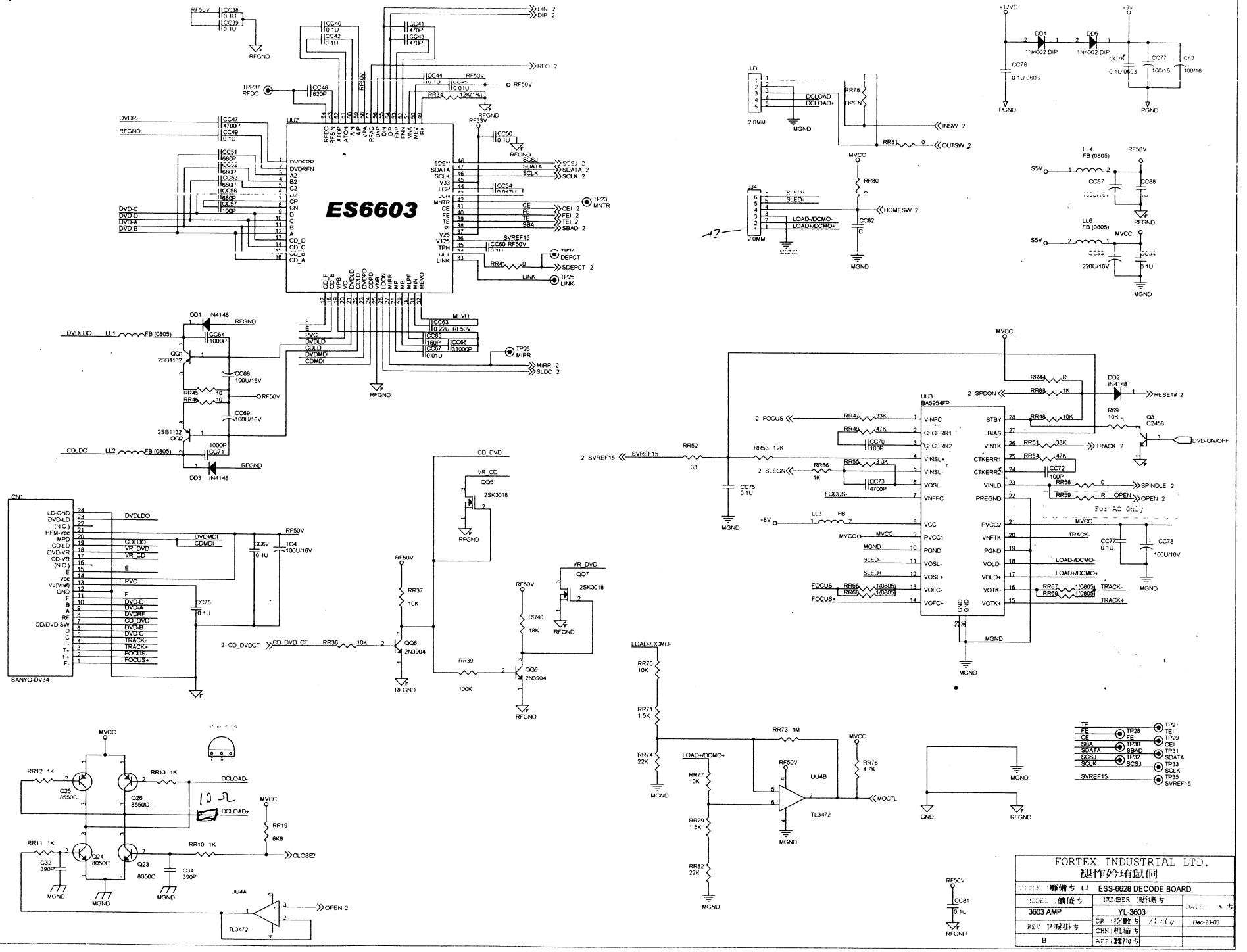
ES6603
UU2
UU3
BA5954FP
UU4A
UU4B
TL3472
CN1
SANYO-DV34
DVDRF
RFGND
DVD-C
DVD-D
DVD-A
DVD-B
DVDLDO
CDLDO
MVCC
RF50V
+12VD
+3V
+8V
PGND
MGND
GND
DCLOAD-
DCLOAD+
INSW 2
OUTSW 2
HOMESW 2
LOAD-/DCMO-
LOAD+/DCMO+
SLED-
S5V
SVREF15
2 SVREF15
2 FOCUS
2 SLEGN
2 SPDON
RESET# 2
TRACK 2
SPINDLE 2
OPEN 2
DVD-ON/OFF
For AC Only
2 CD_DVDCT
CD_DVD
VR_CD
VR_DVD
MOCTL
CLOSE2
MIRR 2
SLDC 2
DEFCT 2
LINK
TP23 MNTR
TP24 DEFCT
TP25 LINK-
TP26 MIRR
TP27 TE
TP28 FE
TP29 TEI
TP30 CE
TP31 CEI
TP32 SBA
TP33 SDATA
TP34 SBAD
TP35 SCSJ
SCLK
SVREF15
FORTEX INDUSTRIAL LTD.
TITLE ESS-6628 DECODE BOARD
3603 AMP
YL-3603-
Dec-23-03
B

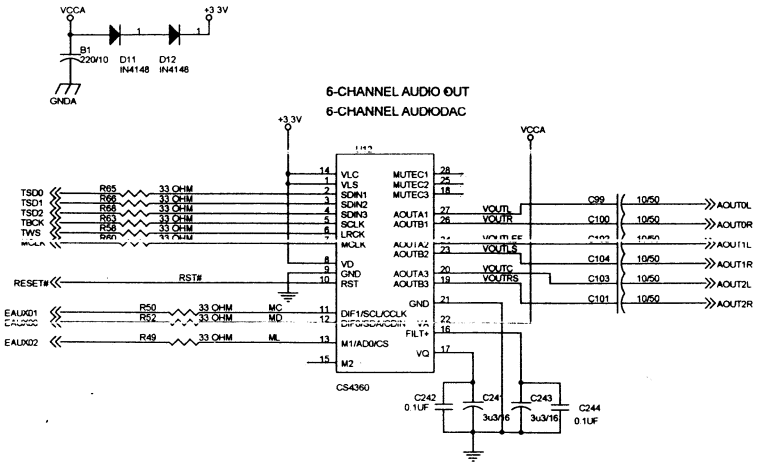


add this part to generate 2.8V or 2.0V  add this generate VCC33E

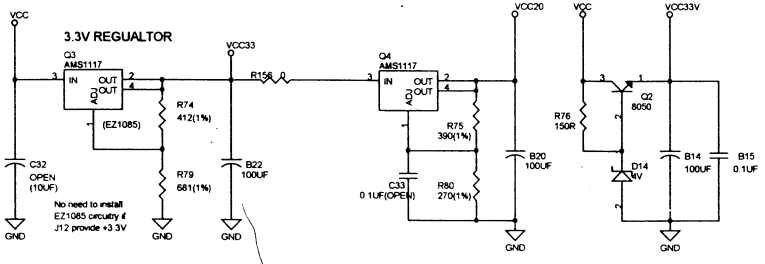


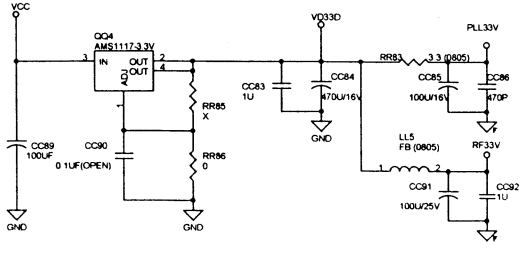


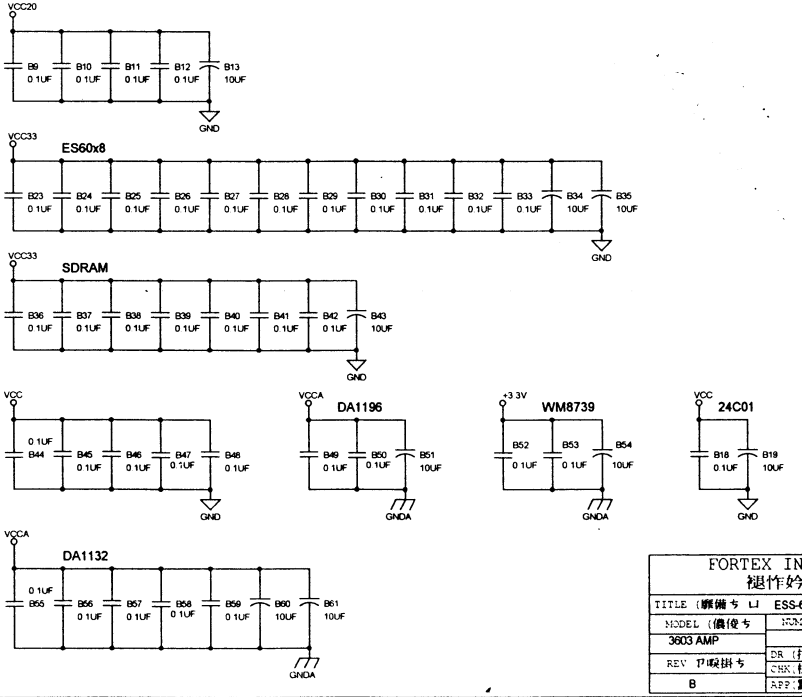


| FORTEX INDUSTRIAL LTD. 褪怍妗琦鼠侗 | | |
|---|---|---|
| TITLE (蹼備ち LI | ESS-6628 DECODE BOARD | |
| MODEL (儀使ち 3603 AMP | NUMBER (昢傷ち YL-3603- | DATE( 、ち |
| REV 卍畯掛ち B | DR (扢數ち Perky | Dec-23-03 |
| | CHK.(机瞄ち | |
| | APP.(蠶怐ち | |

# ESCHER-Y1 REV-A2 ——— ES66x8 + SANYO DV34 PICKUP + OUTPUT

Layout---------ESCHER-H1 REV-A2B2

## Background

This DVD design is based on ESS Vibratto-II ES66x8 single chip DVD mpeg and servo processor. The ES66x8 is built upon ESS proven Programmable Multimedia Processor architecture with integrated servo DSP. A complete DVD design using ES6603 RF-Amp can support all major popular optical pickup heads. With ES66x8 unify memory architecture, the whole system memory is reduced to a minimum. ES66x8 provides the best price performance DVD solution in the industry.

andy_ho@esstech.com.hk

## System Clock Requirement

ES66x8 require a 27MHz clock to operate. This 27MHz can either be generated externally and feed into pin 3 and pin 4 or thru a 27MHz crystal attached to pin 2 and 3. This 27Mhz will be used for all video processing reference. In addition, internal multiplier will generate a much higher operating frequency for the internal RISC+DSP code to operate. Audio clock is generated from ES66x8 by its internal PLL circuitry.

## SDRAM Usage

ES66x8 support the use of higher density 4Mx16 SDRAM. A sinlge of 4Mx16 SDRAM is sufficient for the whole system to operate.

## System Configuration

| CHIP | FUNCTION |
|---|---|
| ES66x8 | Single chip processor that handles all system control, DVD decoding and servo control. |
| 64MBit SDRAM | Data storage and frame buffer |
| 8Mbit EPROM/FLASH | Program storage |
| 24C01 SERIAL EE | System setup configuration storage |
| WM8706 | 2-Channel AudioDAC |
| WM8746 | 6-Channel AudioDAC |
| WM8739 | 2-Channel AudioADC |

| LCSx# | FUNCTION |
|---|---|
| LCS0# | SPARE |
| LCS1# | 74HCT374 (U16) I/O EXPAND CONTROL |
| LCS2# | ROM EMULATOR |
| LCS3# | ROM/FLASH |

| AUXx | FUNCTION |
|---|---|
| AUX0 | I2C DATA |
| AUX1 | I2C CLOCK |
| AUX2 | MICMUTE / HSYNC |
| AUX3 | SCARTCTL / VSYNC |
| AUX4 | IR |
| AUX5 | VFD DATA |
| AUX6 | VFD CS |
| AUX7 | VFD CLK |

| EAUXx | FUNCTION |
|---|---|
| EAXU00 | AUDIODAC MD |
| EAUX01 | AUDIODAC MC |
| EAUX02 | AUDIODAC ML |
| EAUX03 | AUDIOADC CSB# |

| XGPIOx | FUNCTION |
|---|---|
| XGPIO4 | MOCTL / RS232 DET |
| XGPIO5 | CD_DVDCT |
| XGPIO6 | OUTSW |
| XGPIO7 | CLOSE |
| XGPIO8 | HOMESW |
| XGPIO9 | INSW |

## Revision History

Rev-A1

1. Base on Escher-H1 Rev-A4,change pickup from HITACHI HOP1200 to SANYO DV34.

Rev-A2

1.Add pull low resistor on TSD2.
2.Change R92 from 1K to OPEN.
3.Change CDAC to PB,change UDAC to PR.

| | | | |
|---|---|---|---|
| FORTEX INDUSTRIAL LTD. 褪作妗珩鼠侗 | | | |
| TITLE (糜備ち ㄩ | ESS-6628 DECODE BOARD | | |
| MODEL (偶俊ち | NUMBER (昕傷ち | | DATE( ` ` ち |
| 3603 AMP | YL-3603- | | |
| REV 卩暖掛ち | DR (圪數ち | | Dec-23-03 |
| | CHK(机晶ち | | |
| B | APP(謹殉ち | | |