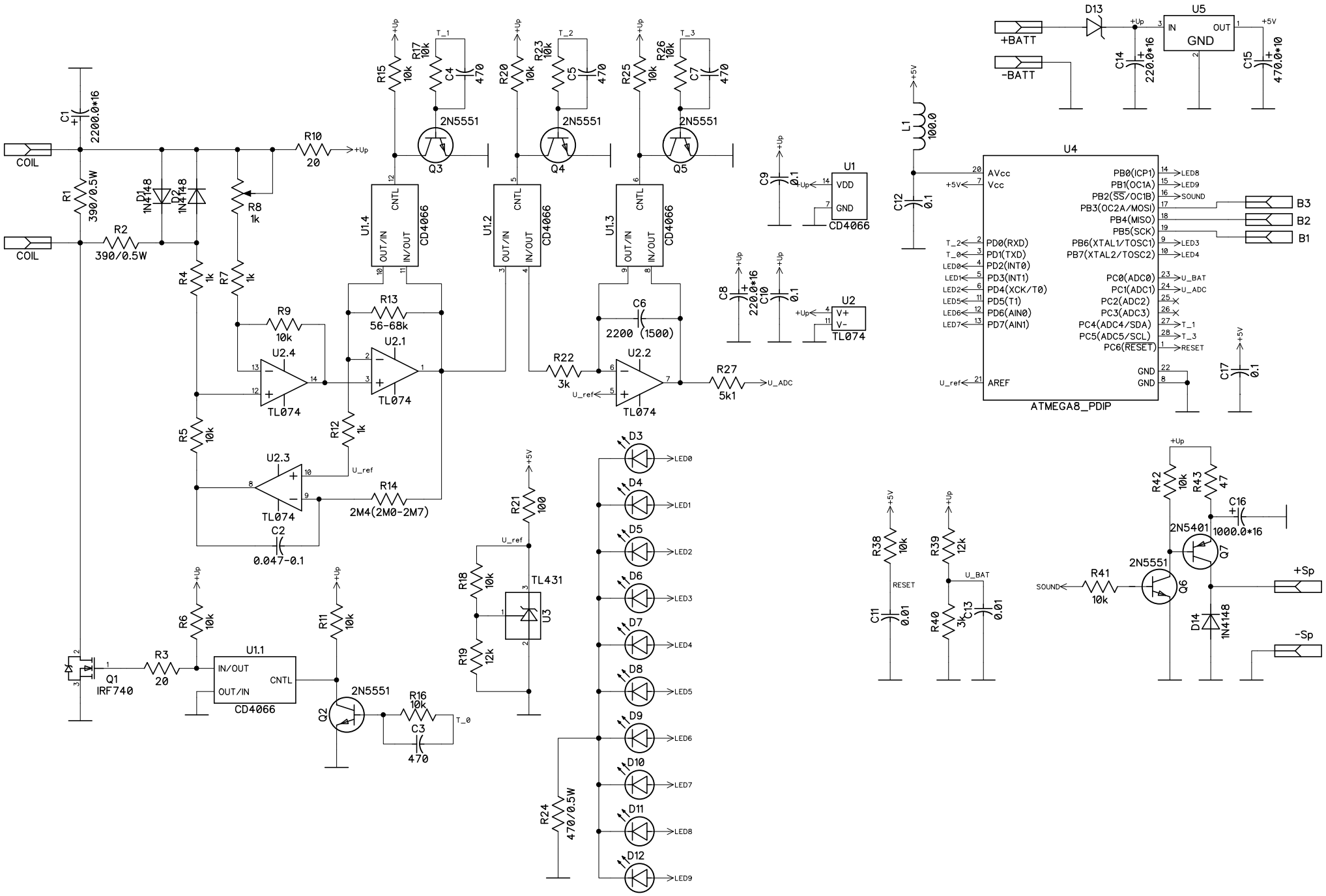
COIL
COIL
C1 2200.0*16
R1 390/0.5W
R2 390/0.5W
D1 1N4148
D2 1N4148
R10 20
+Up
R8 1k
R4 1k
R7 1k
R9 10k
U2.4
TL074
R5 10k
U2.3
TL074
R12 1k
U_ref
R14 2M4(2M0-2M7)
C2 0.047-0.1
R13 56-68k
U2.1
TL074
R15 10k
R17 10k
T_1
C4 470
2N5551
Q3
U1.4
CNTL
OUT/IN
IN/OUT
CD4066
R20 10k
R23 10k
T_2
C5 470
2N5551
Q4
U1.2
CNTL
OUT/IN
IN/OUT
CD4066
R25 10k
R26 10k
T_3
C7 470
2N5551
Q5
U1.3
CNTL
OUT/IN
IN/OUT
CD4066
C6 2200 (1500)
R22 3k
U2.2
TL074
R27 5k1
U_ADC
C9 0.1
U1
VDD
GND
CD4066
C8 220.0*16
C10 0.1
U2
V+
V-
TL074
R6 10k
R3 20
Q1 IRF740
U1.1
IN/OUT
OUT/IN
CNTL
CD4066
R11 10k
2N5551
Q2
R16 10k
C3 470
T_0
R21 100
R18 10k
R19 12k
TL431
U3
R24 470/0.5W
D3
D4
D5
D6
D7
D8
D9
D10
D11
D12
LED0
LED1
LED2
LED3
LED4
LED5
LED6
LED7
LED8
LED9
+BATT
-BATT
D13
U5
IN
OUT
GND
C14 220.0*16
C15 470.0*10
L1 100.0
C12 0.1
U4
AVcc
Vcc
PD0(RXD)
PD1(TXD)
PD2(INT0)
PD3(INT1)
PD4(XCK/T0)
PD5(T1)
PD6(AIN0)
PD7(AIN1)
AREF
PB0(ICP1)
PB1(OC1A)
PB2(SS/OC1B)
PB3(OC2A/MOSI)
PB4(MISO)
PB5(SCK)
PB6(XTAL1/TOSC1)
PB7(XTAL2/TOSC2)
PC0(ADC0)
PC1(ADC1)
PC2(ADC2)
PC3(ADC3)
PC4(ADC4/SDA)
PC5(ADC5/SCL)
PC6(RESET)
GND
GND
ATMEGA8_PDIP
B3
B2
B1
U_BAT
U_ADC
RESET
C17 0.1
R38 10k
C11 0.01
R39 12k
R40 3k
C13 0.01
R42 10k
R43 47
C16 1000.0*16
2N5401
Q7
2N5551
Q6
R41 10k
SOUND
+Sp
-Sp
D14 1N4148