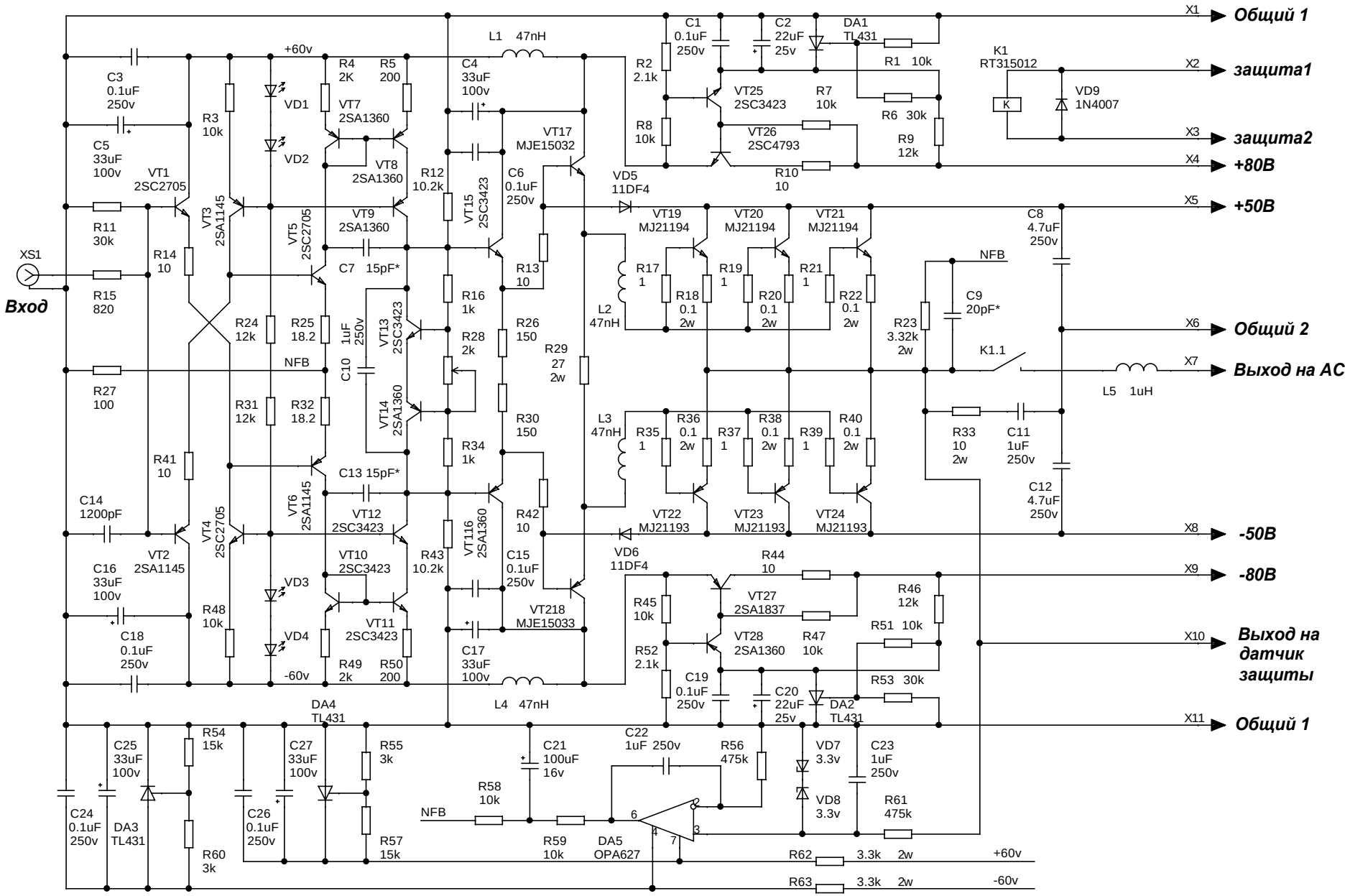

Lynx Audio Engineering Department		
Title: УНЧ с токовой ООС		
Size: A4	Document Number: 1	Rev: LA1
Date: Tuesday, April 22, 2003	Sheet 1 of 1	