DVD Receiver

HTS3500S/98/75/51/12/05

Service
Service
Service

Service Manual

CLASS 1
LASER PRODUCT

MP3-CD PLAYBACK

DVD VIDEO

COMPACT disc DIGITAL VIDEO

COMPACT disc DIGITAL AUDIO

Contents		Page
1	Technical Specifications and Connection Facilities	2
2	Measurements Setup, Service Aid & Lead Free Requirements	4
3	Dismantling Instructions & Service Positions	8
4	Service Test Program	10
5	FTD Display Pin Connection	12
6	Block Diagram	13
	Wiring Diagram	14
7	Circuit Diagram and PWB Layout	15
	Front: Display	15
	Front: Display (Top view)	16
	Front: Display (Bottom view)	17
	Front: Standby	18
	Mono Board: Circuit Diagram (Part 1)	19
	Mono Board: Circuit Diagram (Part 2)	20
	Mono Board: Circuit Diagram (Part 3)	21
	Mono Board: Circuit Diagram (Part 4)	22
	Mono Board: Circuit Diagram (Part 5)	23
	Mono Board: Circuit Diagram (Part 6)	24
	Mono Board: Circuit Diagram (Part 7)	25
	Mono Board: Circuit Diagram (Part 8)	26
	Mono Board: Circuit Diagram (Part 9)	27
	Layout: Mono Board (Top View)	28
	Layout: Mono Board (Bottom View)	29
	PSU Circuit Diagram	30

Contents		Page
8	Exploded View & Spare Parts List	31
	Exploded View of the set	31
	Spare Part List	32

©Copyright 2005 Philips Consumer Electronics B.V. Eindhoven, The Netherlands.
All rights reserved. No part of this publication may be reproduced, stored in a retrieval system or transmitted, in any form or by any means, electronic, mechanical, photocopying, or otherwise without the prior permission of Philips.

Published by KC-TE 0519 AV Systems | Printed in the Netherlands | Subject to modification | EN 3139 785 31191

Version 1.1

PHILIPS

LOCATION OF PC BOARDS

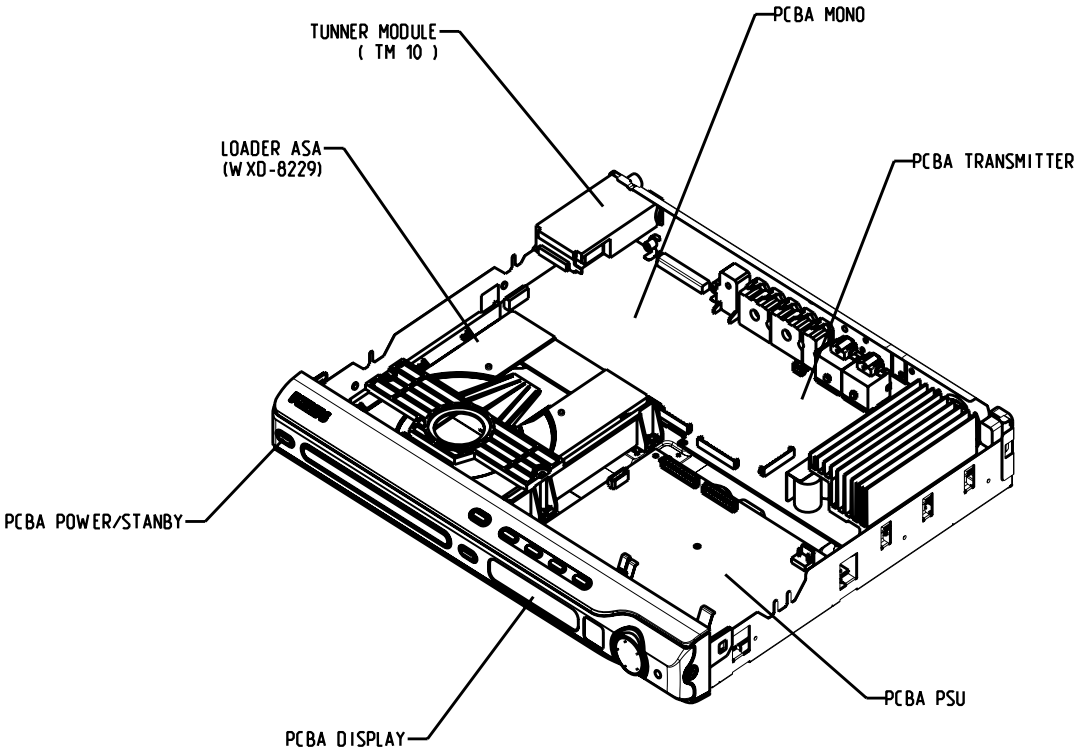

HTS3500S/HTS3300

VERSION VARIATIONS:

Type /Versions: / Features &	HTS3500S /98/75	HTS3500S /05	HTS3500S /12	HTS3500S /51	HTS3300 /98	HTS3300 /55	HTS3300 /93	HTS3300 /51	HTS3300 /12	HTS3300 /05
Progressive Scan	x	x	x	x						
Line-Out	x	x	x	x						
TV-In	x				x	x	x			
Aux-In	x	x	x	x	x	x	x	x	x	x
Y/Pb/Pr (YUV) Component Video Output	x	x	x	x	x	x	x			
Coax	x	x	x	x	x	x	x	x	x	x
CVBS	x	x	x	x	x	x	x			
S-Video Output	x	x	x	x						
SCART		x	x	x				x	x	x

1. Specifications

1.1 General:

Mains voltage	:	230V for /05, /12, /51 120V/230V for /98,/75
Mains frequency	:	50/60Hz for /98,/75, 50Hz for /12, /05, /51
Power consumption	:	100W < 0.5W Eco standby power < 100W at 1/8 P_{rated} (For main unit)
Dimension main unit	:	360 x 54 x 324mm

1.2 Tuner

FM

Tuning range	:	87.5-108MHz
Grid	:	50kHz for /12, /05, /51 100kHz for /98,/75,
IF frequency	:	10.7MHz ± 25kHz
Aerial input	:	75Ω coaxial
Sensitivity at 26dB S/N	:	< 7µV
Selectivity at 600kHz bandwidth	:	> 25dB
IF rejection	:	> 60dB
Image rejection	:	> 25dB
Distortion at RF=1mV, dev. 75kHz	:	< 3%
-3dB Limiting point	:	< 8µV
Crosstalk at RF=1mV, dev. 67.5kHz	:	> 28dB
Crosstalk at RF=1mV, dev. 40kHz	:	> 18dB

MW

Tuning range	:	531-1602kHz for /12, /05, /51, /98,/75, /93, /55 530-1700kHz for /98, /55, /93
Grid	:	9kHz for /12, /05, /51, /98,/75, /93, /55 10kHz for /98, /55, /93
IF frequency	:	450kHz ± 1kHz
Aerial input	:	Frame aerial
Sensitivity at 26dB S/N	:	< 4.0mV/M
Selectivity at 18kHz bandwidth	:	> 20dB
IF rejection	:	> 45dB
Image rejection	:	> 28dB
Distortion at RF=50mV, m=80%	:	< 5%

1.3 AMPLIFIER:

Output power		
Front	:	100W RMS / channel
Rear	:	75W RMS / channel
Center	:	100W RMS
Subwoofer	:	150W RMS
Frequency response ±0.5dB	:	20Hz-20kHz
Hum (Volume Minimum)	:	200nW
Residual noise (Volume Minimum)	:	40nW
Input sensitivity		
Aux In	:	1V ± 3dB at 22kΩ
Scart In	:	1V ± 3dB at 22kΩ
Output sensitivity		
Line Out (Left/Right)	:	1V ± 2dB at 10kΩ
Scart Out (Left/Right)	:	1V ± 2dB at 10kΩ

1.4 COMPACT DISC/VCD/DVD:

Video Decoding	:	MPEG-1/MPEG-2/ MPEG-4/DivX 3.11, 4.x & 5.x
Video DAC	:	12 Bits
Signal System	:	PAL / NTSC
Video Format	:	4:3 / 16:9
CVBS Out [1)]		
CVBS level	:	1.0 ± 0.1 V_{p-p}
Luminance S/N	:	>= 60dB
S-Video Out [1)]		
Y level	:	1.0 ± 0.1 V_{p-p}
Y S/N	:	>= 60dB
C level (burst)	:	286 mV_{pp} +1/-4 dB
RGB/YUV Out 1)		
Amplitude	:	1.0 ± 0.1 V_{p-p}
S/N	:	>= 60dB

[1)] Output terminals to be terminated with 75Ω

2. Measurements Setup, Service Aid & Lead Free Requirements

MEASUREMENT SETUP

Tuner FM

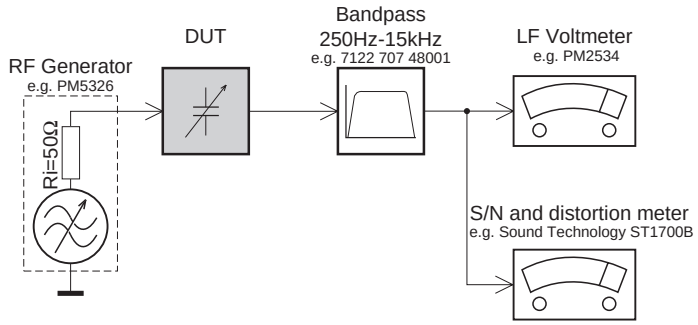

Use a bandpass filter to eliminate hum (50Hz, 100Hz) and disturbance from the pilottone (19kHz, 38kHz).

Tuner AM (MW,LW)

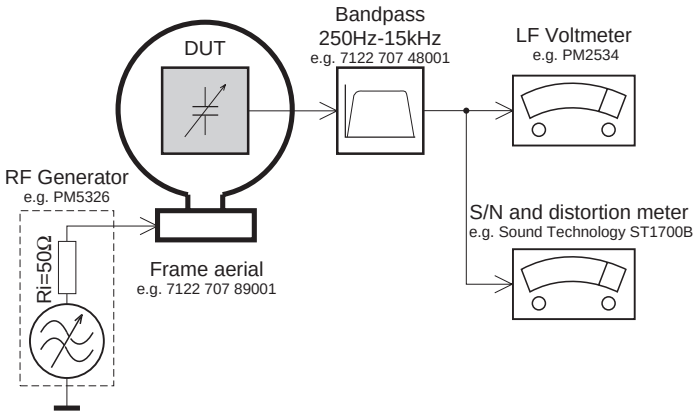

To avoid atmospheric interference all AM-measurements have to be carried out in a Faraday´s cage.
Use a bandpass filter (or at least a high pass filter with 250Hz) to eliminate hum (50Hz, 100Hz).

CD

Use Audio Signal Disc SBC429 4822 397 30184
(replaces test disc 3)

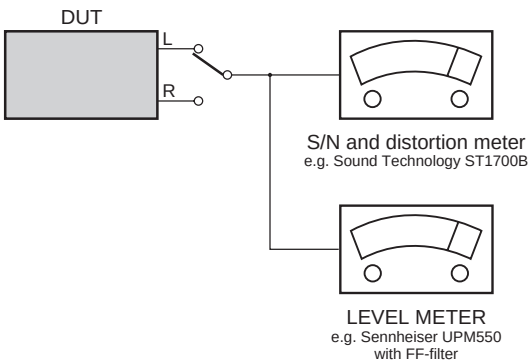

Recorder

Use Universal Test Cassette **CrO2** SBC419 4822 397 30069
or Universal Test Cassette **Fe** SBC420 4822 397 30071

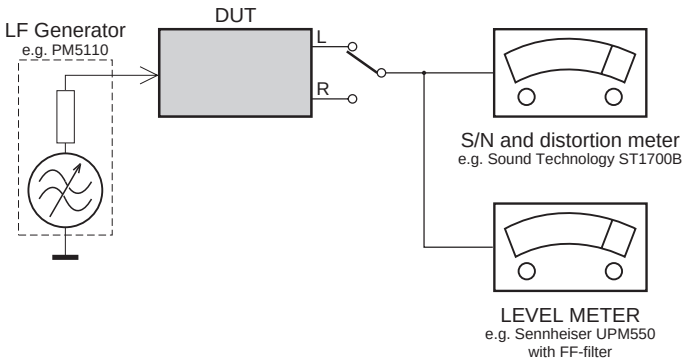

SERVICE AIDS

Service Tools:

Universal Torx driver holder 4822 395 91019
Torx bit T10 150mm 4822 395 50456
Torx driver set T6 - T20 ..... 4822 395 50145
Torx driver T10 extended 4822 395 50423

Compact Disc:

SBC426/426A Test disc 5 + 5A 4822 397 30096
SBC442 Audio Burn-in Test disc 1kHz 4822 397 30155
SBC429 Audio Signals disc 4822 397 30184
Dolby Pro-logic Test Disc 4822 395 10216

HANDLING CHIP COMPONENTS

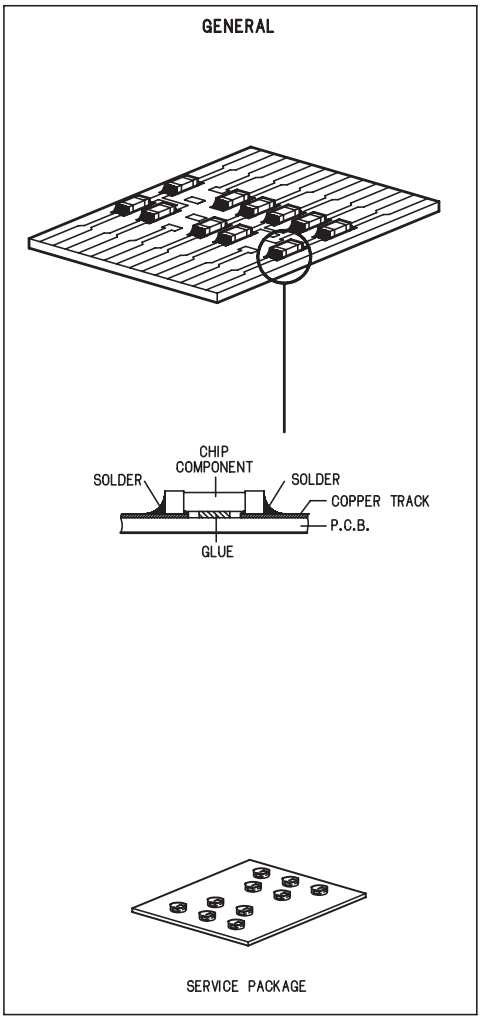

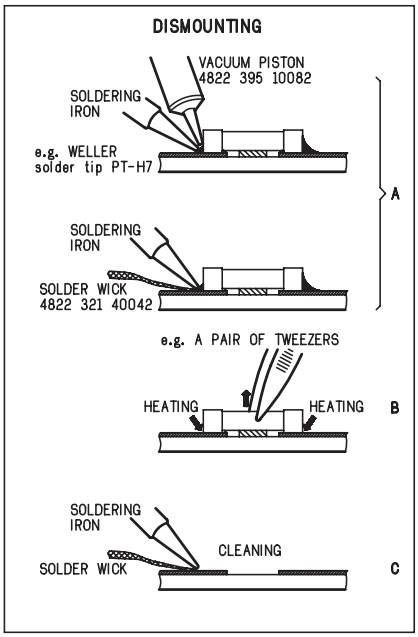

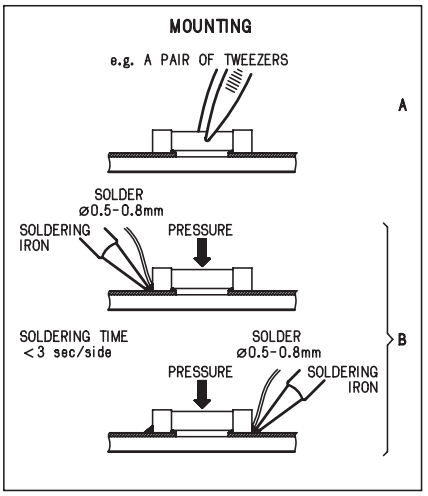

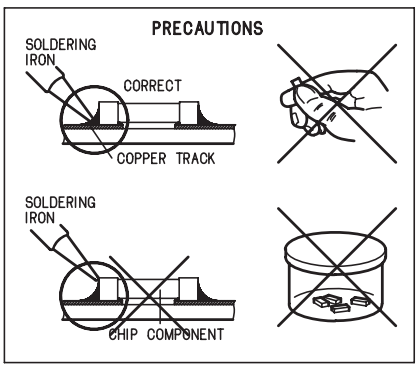

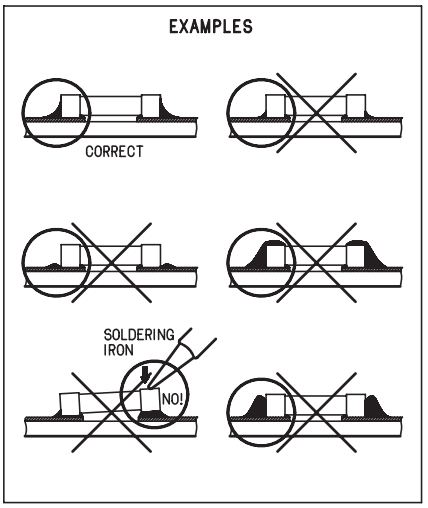

ESD

(GB) WARNING

All ICs and many other semi-conductors are susceptible to electrostatic discharges (ESD). Careless handling during repair can reduce life drastically.
When repairing, make sure that you are connected with the same potential as the mass of the set via a wrist wrap with resistance. Keep components and tools also at this potential.

(NL) WAARSCHUWING

Alle IC's en vele andere halfgeleiders zijn gevoelig voor electrostatische ontladingen (ESD). Onzorgvuldig behandelen tijdens reparatie kan de levensduur drastisch doen verminderen. Zorg ervoor dat u tijdens reparatie via een polsband met weerstand verbonden bent met hetzelfde potentiaal als de massa van het apparaat.
Houd componenten en hulpmiddelen ook op ditzelfde potentiaal.

(F) ATTENTION

Tous les IC et beaucoup d'autres semi-conducteurs sont sensibles aux décharges statiques (ESD).
Leur longévité pourrait être considérablement écourtée par le fait qu'aucune précaution n'est prise à leur manipulation.
Lors de réparations, s'assurer de bien être relié au même potentiel que la masse de l'appareil et enfiler le bracelet serti d'une résistance de sécurité.
Veiller à ce que les composants ainsi que les outils que l'on utilise soient également à ce potentiel.

(D) WARNUNG

Alle ICs und viele andere Halbleiter sind empfindlich gegenüber elektrostatischen Entladungen (ESD).
Unsorgfältige Behandlung im Reparaturfall kan die Lebensdauer drastisch reduzieren.
Veranlassen Sie, dass Sie im Reparaturfall über ein Pulsarmband mit Widerstand verbunden sind mit dem gleichen Potential wie die Masse des Gerätes.
Bauteile und Hilfsmittel auch auf dieses gleiche Potential halten.

(I) AVVERTIMENTO

Tutti IC e parecchi semi-conduttori sono sensibili alle scariche statiche (ESD).
La loro longevità potrebbe essere fortemente ridatta in caso di non osservazione della più grande cauzione alla loro manipolazione.
Durante le riparazioni occorre quindi essere collegato allo stesso potenziale che quello della massa dell'apparecchio tramite un braccialetto a resistenza.
Assicurarsi che i componenti e anche gli utensili con quali si lavora siano anche a questo potenziale.

(GB) ESD PROTECTION EQUIPMENT:

Complete Kit ESD3 (small tablemat, wristband, connection box, extention cable and earth cable) 4822 310 10671
Wristband tester 4822 344 13999

(GB)

Safety regulations require that the set be restored to its original condition and that parts which are identical with those specified, be used

Safety components are marked by the symbol ⚠.

(NL)

Veiligheidsbepalingen vereisen, dat het apparaat bij reparatie in zijn oorspronkelijke toestand wordt teruggebracht en dat onderdelen, identiek aan de gespecificeerde, worden toegepast.

De Veiligheidsonderdelen zijn aangeduid met het symbool ⚠

(F)

Les normes de sécurité exigent que l'appareil soit remis à l'état d'origine et que soient utiliséés les piéces de rechange identiques à celles spécifiées.

Less composants de sécurité sont marqués ⚠

(D)

Bei jeder Reparatur sind die geltenden Sicherheitsvorschriften zu beachten. Der Original zustand des Geräts darf nicht verändert werden; für Reparaturen sind Original-Ersatzteile zu verwenden.

Sicherheitsbauteile sind durch das Symbol ⚠ markiert.

(I)

Le norme di sicurezza esigono che l'apparecchio venga rimesso nelle condizioni originali e che siano utilizzati i pezzi di ricambio identici a quelli specificati.

Componenty di sicurezza sono marcati con ⚠

(GB)

After servicing and before returning set to customer perform a leakage current measurement test from all exposed metal parts to earth ground to assure no shock hazard exist. The leakage current must not exceed 0.5mA.

CLASS 1
LASER PRODUCT

(GB) Warning !

Invisible laser radiation when open.
Avoid direct exposure to beam.

(S) Varning !

Osynlig laserstrålning när apparaten är öppnad och spärren är urkopplad. Betrakta ej strålen.

(SF) Varoitus !

Avatussa laitteessa ja suojalukituksen ohitettaessa olet alttiina näkymättömälle laserisäteilylle. Älä katso säteeseen!

(DK) Advarse !

Usynlig laserstråling ved åbning når sikkerhedsafbrydere er ude af funktion. Undgå udsaettelse for stråling.

(F)

"Pour votre sécurité, ces documents doivent être utilisés par des spécialistes agréés, seuls habilités à réparer votre appareil en panne".

2.1 Lead Free Requirements

Pb(Lead) Free Solder

When soldering , be sure to use the pb free solder.

INDENTIFICATION:

Regardless of special logo (not always indicated)

one must treat all sets from **1 Jan 2005** onwards, according next rules:

Important note: In fact also products of year 2004 must be treated in this way as long as you avoid mixing solder-alloys (leaded/ lead-free). So best to always use SAC305 and the higher temperatures belong to this.

Due to lead-free technology some rules have to be respected by the workshop during a repair:

- Use only lead-free solder alloy Philips SAC305 with order code 0622 149 00106. If lead-free solder-paste is required, please contact the manufacturer of your solder-equipment. In general use of solder-paste within workshops should be avoided because paste is not easy to store and to handle.
- Use only adequate solder tools applicable for lead-free solder alloy. The solder tool must be able
  - To reach at least a solder-temperature of 400°C,
  - To stabilize the adjusted temperature at the solder-tip
  - To exchange solder-tips for different applications.
- Adjust your solder tool so that a temperature around 360°C – 380°C is reached and stabilized at the solder joint. Heating-time of the solder-joint should not exceed ~ 4 sec. Avoid temperatures above 400°C otherwise wear-out of tips will rise drastically and flux-fluid will be destroyed. To avoid wear-out of tips switch off un-used equipment, or reduce heat.
- Mix of lead-free solder alloy / parts with leaded solder alloy / parts is possible but PHILIPS recommends strongly to avoid mixed solder alloy types (leaded and lead-free).
  If one cannot avoid or does not know whether product is lead-free, clean carefully the solder-joint from old solder alloy and re-solder with new solder alloy (SAC305).
- Use only original spare-parts listed in the Service-Manuals. Not listed standard-material (commodities) has to be purchased at external companies.
- Special information for BGA-ICs:
  - always use the 12nc-recognizable soldering temperature profile of the specific BGA (for de-soldering always use the lead-free temperature profile, in case of doubt)
  - lead free BGA-ICs will be delivered in so-called 'dry-packaging' (sealed pack including a silica gel pack) to protect the IC against moisture. After opening, dependent of MSL-level seen on indicator-label in the bag, the BGA-IC possibly still has to be baked dry. (MSL=Moisture Sensitivity Level). This will be communicated via AYS-website.
  Do not re-use BGAs at all.
- For sets produced before 1.1.2005 (except products of 2004), containing leaded solder-alloy and components, all needed spare-parts will be available till the end of the service-period. For repair of such sets nothing changes.
- On our website **www.atyourservice.ce.Philips.com** you find more information to:
  - BGA-de-/soldering (+ baking instructions)
  - Heating-profiles of BGAs and other ICs used in Philips-sets

  You will find this and more technical information within the "magazine", chapter "workshop news".

For additional questions please contact your local repair-helpdesk.

3. Dismantling Instructions

3.1 Dismantling of the DVD Loader

1) The tray can be manually open by inserting a minus screw drive and push the lever in the direction as shown in Figure 3-1 to unlock the tray before sliding it out.

Figure 3-1

2) Slide out the tray and remove the Cover Tray (pos 110) as shown in Figure 3-2.

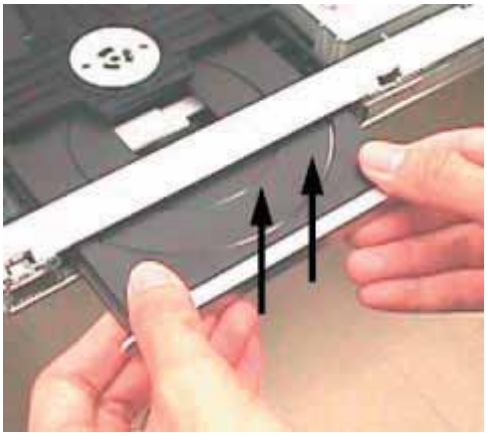

Figure 3-2

3) Loosen 5 screws to remove the Front Top.(pos 240)
- 1 screw each on the left & right side (pos 272)
- 3 screws behind

4) Loosen 4 screws C (see Figure 3-4) to remove the DVD Loader.

3.2 Dismantling of the Tuner Module, MONO Board, Front Board, PSU Module

1) Loosen 1 screw A (see Figure 3-3) to remove the Tuner Module (pos 1040).

2) Loosen 9 screws B (see Figure 3-3) and 4 screws (see Figure 3-4) to remove MONO Board.

3) Release 4 snap hooks to remove Front Board.
- 1 snap hook each on the left & right side (pos 161).
- 2 snap hooks on the bottom side (pos 161).

4) Loosen 4 screws E (see Figure 3-4) to remove the PSU Module.

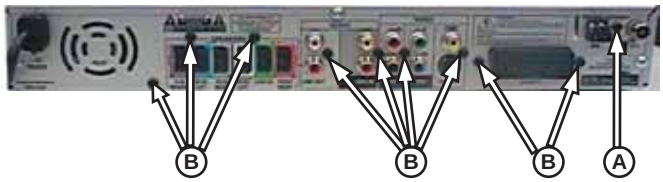

Figure 3-3

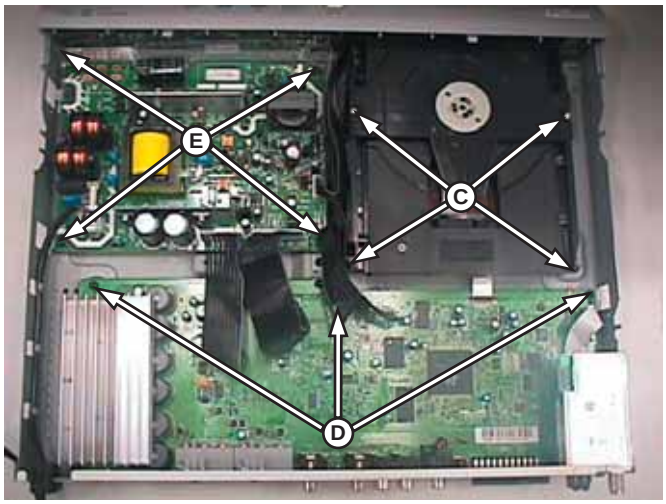

Figure 3-4

3.3 Service Positions

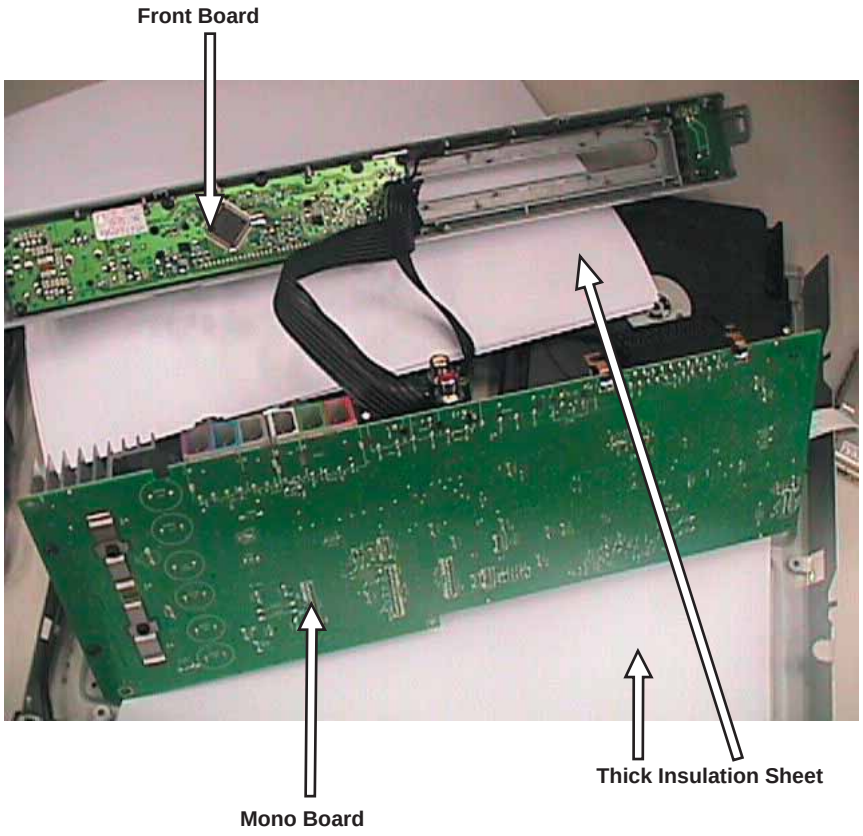

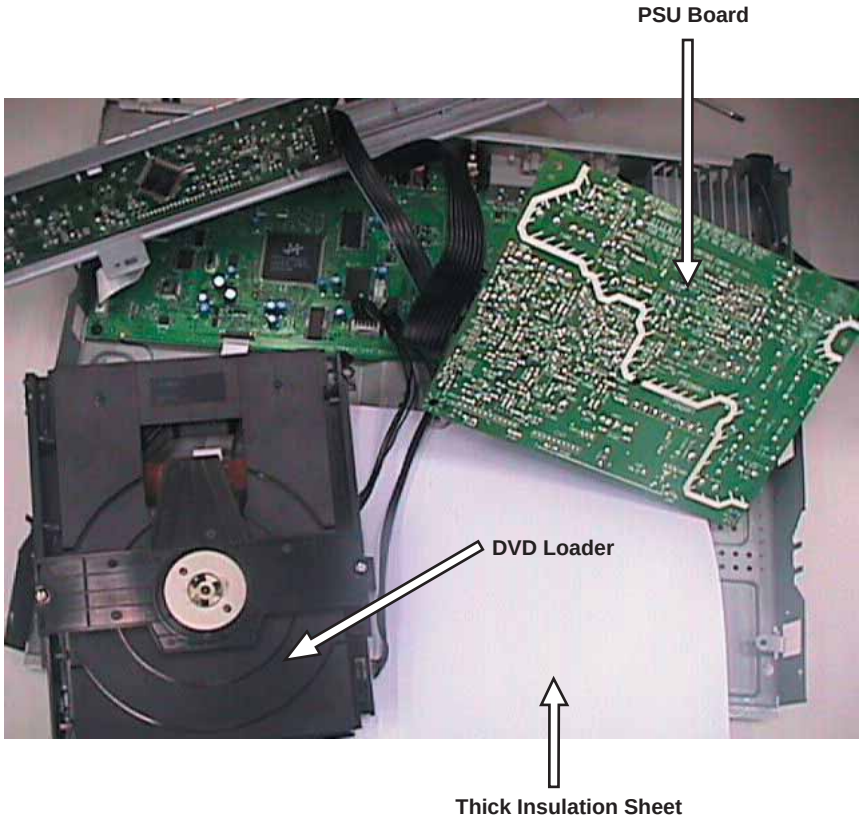

4. Service Test Program

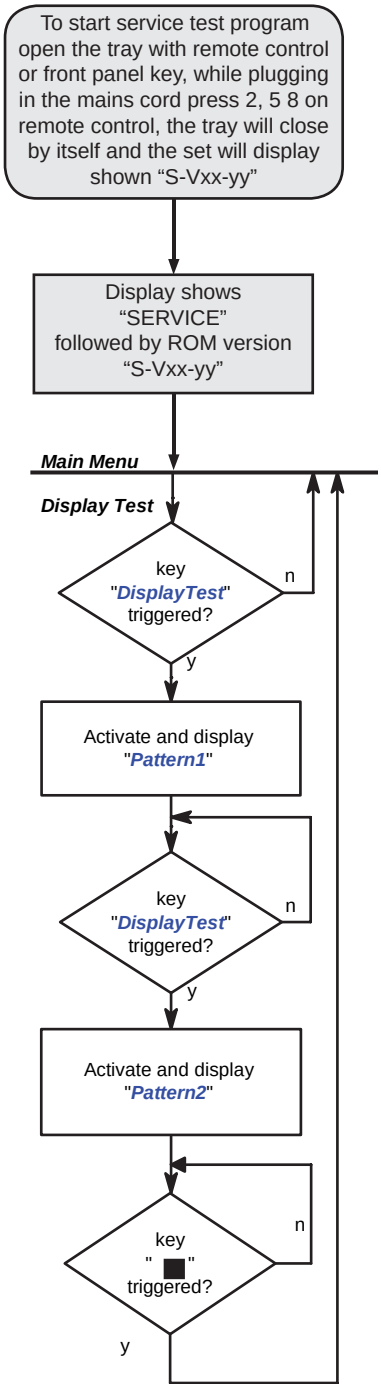

S refers to Service Mode
V refers to Version
xx refers to Software version number of BEA (counting up from 01 to 99)
yy refers to Software version number of Front uP (counting up from 01 to 99)

4.1 Display Test

Purpose:
This test is used to check the driving circuits, the display and whether there are any short-circuits, open-circuits or any other defects.

Player:

Following display patterns are used to test the display and its connections to µP.
Pattern 1: *Default: All display control pins are ON*
- to check the open-circuits

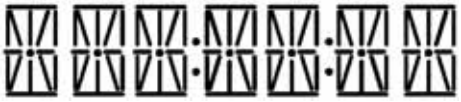

Pattern 2: *Alternate display control pins are on (Test Pattern: 0x55)*
- to check the short-circuits on Data port

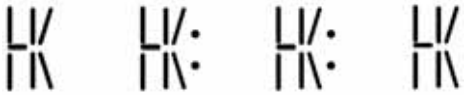

Receiver:

Following display patterns are used to test the display and its connections to µP.
Pattern 1: *Default: All display control pins are ON*
- to check the open-circuits

Pattern 2: *Alternate display control pins are on (Test Pattern: 0x55)*
- to check the short-circuits on Data port

TEST	Activated with	ACTION
EEPROM FORMAT TEST	⏮ ⏮ to Exit	Load default data. Display shows “NEW”. Caution! All presets from the customer will be lost!!
ROTARY ENCODER TEST	Volume Knob	Display shows value for 2 seconds. Volume values increases or decreases in steps of 1 until 0 (VOL MIN) or 40 (VOL MAX) is reached.
LEAVE SERVICE TEST PROGRAM	Disconnect mains cord	

4.1.1 Reprogramming of DVD version Matrix

After repair, the customer setting and region code may be lost. Reprogramming will put the set back in the state in which it has left the factory, ie. with the default setting and the allowed region code.

Model	Region	Region Code	TV Type
HTS 3500S/75	Asia Pacific	3	PAL
HTS 3500S/05	UK, Ireland	2	PAL
HTS 3500S/12	Europe	2	PAL
HTS 3500S/51	Russia	5	PAL
HTS 3500S/98	Asia Pacific	3	PAL

To reprogram do as follows:
1) Power up the set and select DISC source.
2) Open tray by press “OPEN/CLOSE” button on the set or press and hold “STOP” button on the RC.
3) Press the following buttons on the Remote Control:
   <9> <9> <9> <9> <SVBT> <0> ..... for HTS 3500S/12
   <9> <9> <9> <9> <SVBT> <1> ..... for HTS 3500S/51
   <9> <9> <9> <9> <SVBT> <2> ..... for HTS 3500S/05
   <9> <9> <9> <9> <SVBT> <3> ..... for HTS 3500S/98
   <9> <9> <9> <9> <SVBT> <5> ..... for HTS 3500S/75
4) The display shows **‘YYYY-ZZ’** and the tray will close.
   YYYY = model number (eg. 8300, 8500, etc.)
   ZZ = slash stroke version (eg. 01, 69, etc.)

4.1.2 Procedure for check Software version

1) Power up the set and select DISC source.
2) Open tray by press “OPEN/CLOSE” button on the set or press and hold “STOP” button on the RC.
3) Press “DISPLAY” button on the Remote control.
4) The TV screen will shows:

   SD6.3 Vxx YYYY-ZZ A BB
   SERVO: nnnnnnnn REG:A

   xx = version number
   YYYY = model number (eg. 8300, 8500, etc.)
   ZZ = slash stroke version (eg. 01, 69, etc.)
   A = region code
   BB = Front uP software version number
   nnnnnnnn = servo version number

4.1.3 Burning of firmware

1. Unzip the zip-archive attached with this service information.
2. Start the CD burning software and create a new CD Project (Data disc) with the following settings:
   a. File System: ISO9660
   b. Format: MODE 2/XA
   c. Recording format: Single Session (Track at once), Finalized CD
3. Place the content of the zip-archive into the root directory of the new CD project.
4. Burn the data onto a blank CDR or CDRW.

Note: ISO9660 is mandatory, UDF discs are not supported! The final CDROM must not contain any other data except the file from the zip-archive.

4.1.4 Procedure to upgrade the firmware

1. Power up the set and open tray.
2. Insert the prepared Upgrade CDROM and close the tray.
3. The set will display:

   LOAD -> MULTICH ->……. ->UPG END.
   The whole process takes less than 2 minutes.

Note: Do not press any button or interrupt the main supply upgrading process,Otherwise the set may become defective.

4. When the upgrade is completed, the tray will close automatic.
5. The tray will close and the set will go to Standby mode automatically when the upgrade process is completed.

4.1.5 Procedure to check the firmware version to confirm upgrading

1. Power up the set and open tray.
2. Press the <Menu Display> button on the Remote Control.
3. The firmware version will be displayed on the top left hand corner of the OSD.

4.1.6 Trade Mode

Trade mode is a feature that will block all set keys when enabled. It is for dealers to prevent customers fromremoving disc, changing source etc using the set keys.Rotary and Remote Control (RC) keys are still allowed inTrade mode.

To activate Trade Mode:

1) Power up the set and select DISC source.
2) Open tray by press “OPEN/CLOSE” button on the set or press and hold “STOP” button on the RC.
3) Then press buttons <2> <5> <9> on the RC.
4) The display shows **‘TRA ON’** and the tray will close.
Trade Mode is now enabled.

To deactivate Trade Mode:

1) Power up the set and select DISC source.
2) Open tray by press and hold “STOP”button on the RC.
3) Then press buttons <2> <5> <9> on the RC.
4) The display shows **‘TRA OFF’** and the tray will close.
Trade Mode is now disabled.

4.1.7 Procedure to change Tuner Grid (not for all versions)

1. Press **SOURCE** to select "FM" or "MW".
2. Press **STANDBY ON** to switch the DVD system to standby mode.
3. Press **STANDBY ON** again to turn on the DVD system and hold down |◄◄ button on the front panel.
   ➜ The display will show "GRID 9" or "GRID 10".

   Helpful Hint:
   – GRID 9 and GRID 10 indicate that the tuning grid is in step of 9 kHz and 10 kHz respectively.

Note: Repeating the same action will toggle back to its previous tuning grid setting.

5. FTD Display Pin Connection

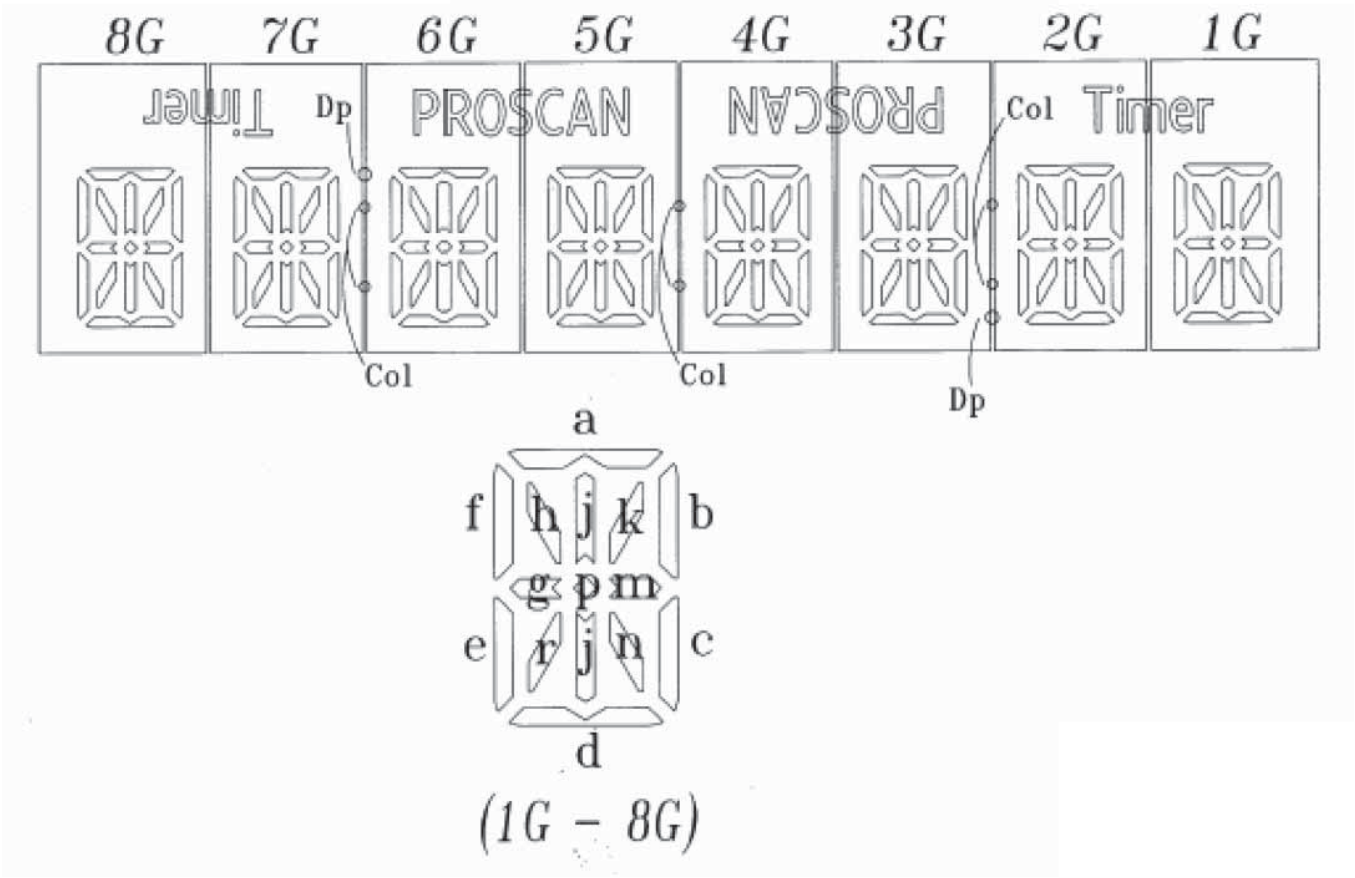

	8G	7G	6G	5G	4G	3G	2G	1G
P1	a	a	a	a	a	a	a	a
P2	j	j	j	j	j	j	j	j
P3	h	h	h	h	h	h	h	h
P4	k	k	k	k	k	k	k	k
P5	b	b	b	b	b	b	b	b
P6	f	f	f	f	f	f	f	f
P7	m	m	m	m	m	m	m	m
P8	g	g	g	g	g	g	g	g
P9	c	c	c	c	c	c	c	c
P10	e	e	e	e	e	e	e	e
P11	r	r	r	r	r	r	r	r
P12	n	n	n	n	n	n	n	n
P13	d	d	d	d	d	d	d	d
P14		col		col		col		
P15	p	p	p	p	p	p	p	p
P16	Timer		PROSCAN		PROSCAN		Timer	
P17		dp				dp		

6. Block Diagram

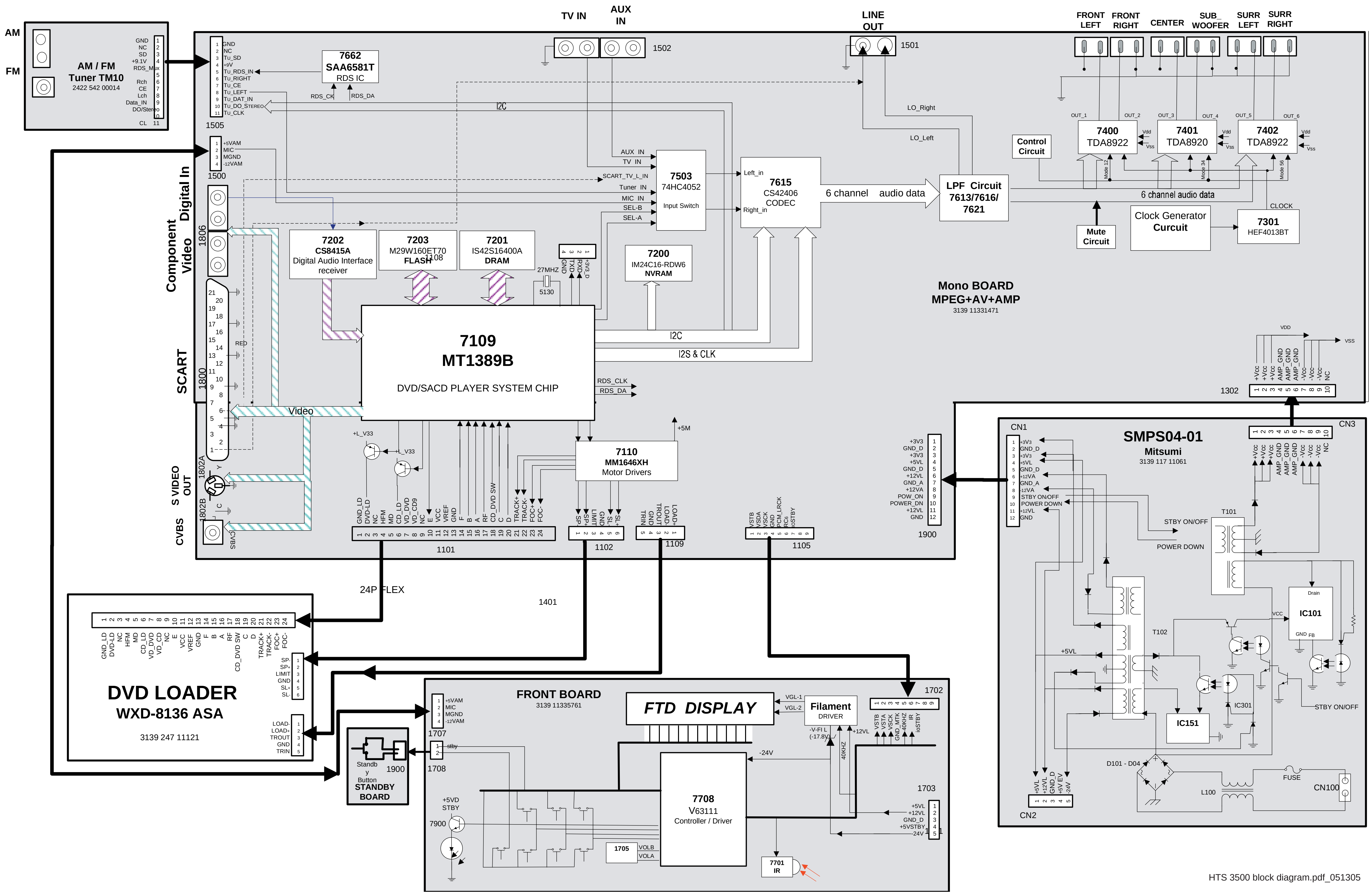

HTS 3500 block diagram.pdf_051305

Wiring Diagram

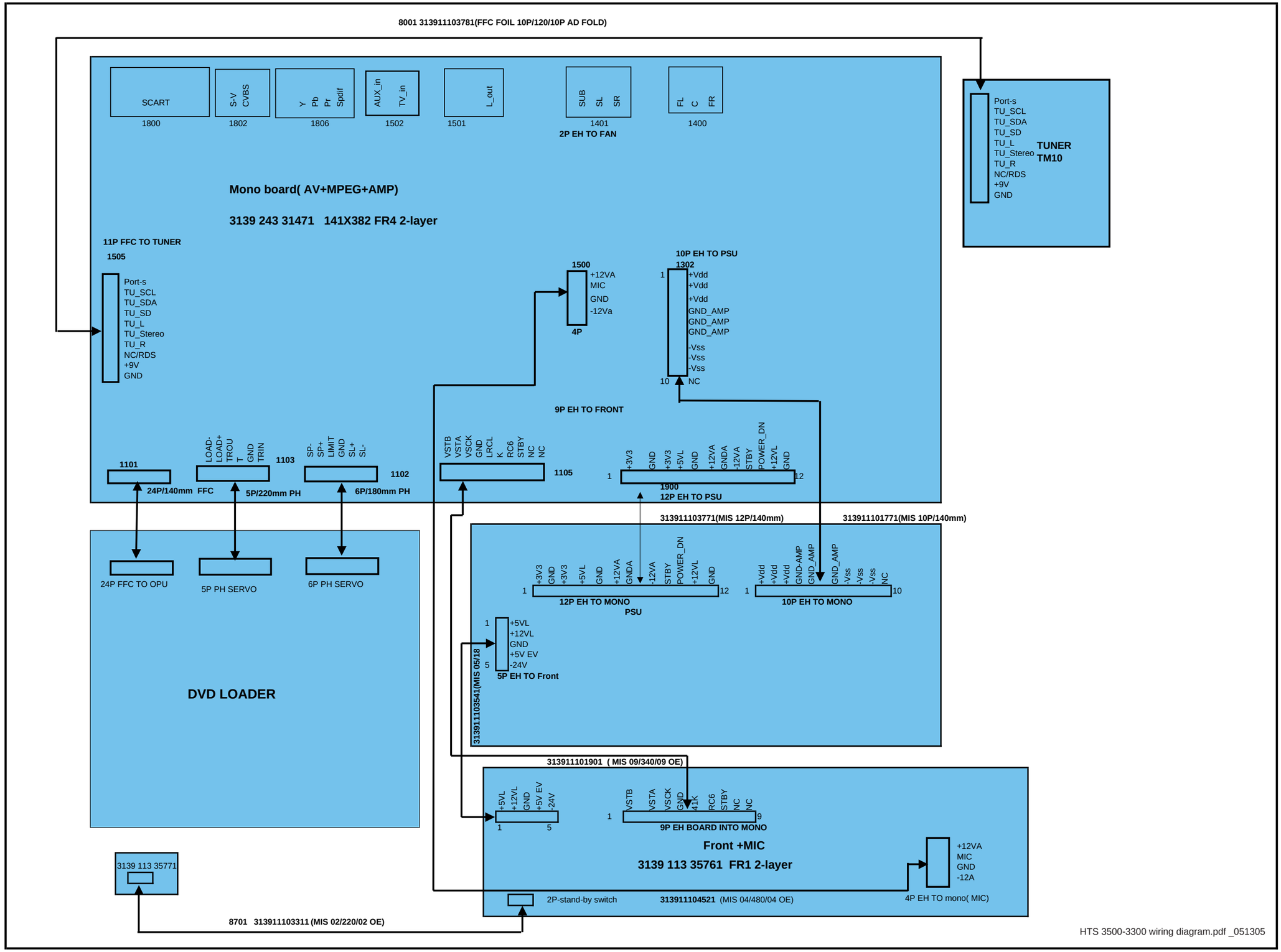

7. Front: Display

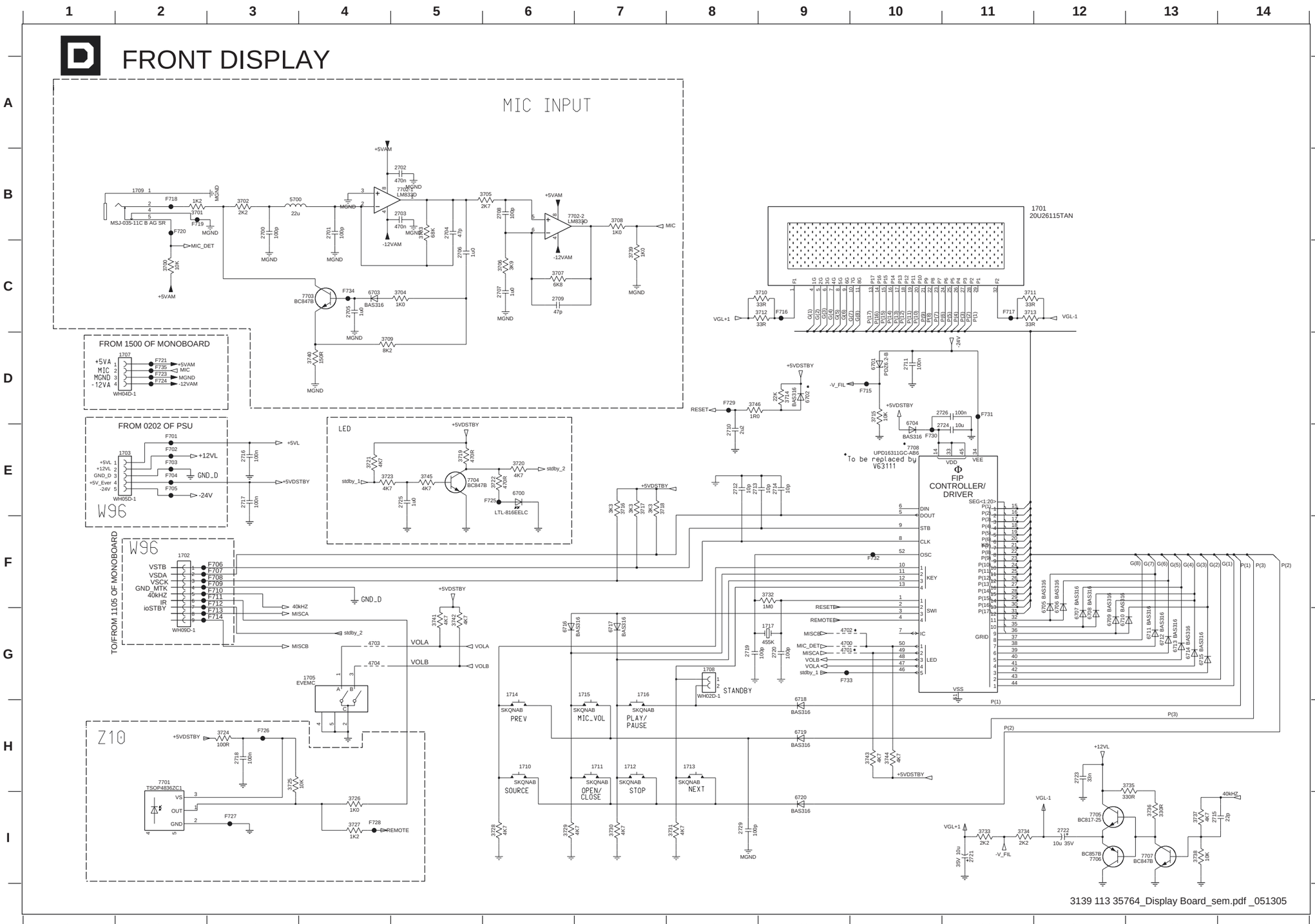

1701 B12
1702 F2
1703 E2
1705 G4
1707 D2
1708 G8
1709 B2
1710 H6
1711 H7
1712 H7
1713 H8
1714 G6
1715 G7
1716 G7
1717 G9
2700 B3
2701 B4
2702 B5
2703 B5
2704 B5
2705 C4
2706 C5
2707 C6
2708 B6
2709 C6
2710 E8
2711 D10
2712 E8
2713 E8
2714 E9
2715 I13
2716 E3
2717 E3
2718 H3
2719 G8
2720 G9
2721 I11
2722 I12
2723 H12
2724 E11
2725 E5
2726 D11
3700 C2
3701 B2
3702 B3
3703 B5
3704 C5
3705 B6
3706 C6
3707 C6
3708 B7
3709 D4
3710 C9
3711 C11
3712 C9
3713 C11
3714 D9
3715 D10
3716 E7
3717 E7
3718 E7
3719 E5
3720 E6
3721 E4
3722 E6
3723 E4
3724 H3
3725 H3
3726 I4
3727 I4
3728 I6
3729 I6
3730 I7
3731 I8
3732 F9
3733 I11
3734 I11
3735 H13
3736 I13
3737 I13
3738 I13
3739 C7
3740 D4
3741 G5
3742 G5
3743 H10
3744 H10
3745 E5
3746 D8
4700 G9
4701 G9
4702 G9
4703 G4
4704 G4
5700 B3
6700 E6
6701 D10
6702 D9
6703 C4
6704 E10
6705 F12
6706 F12
6707 G12
6708 G12
6709 G12
6710 G12
6711 G13
6712 G13
6713 G13
6714 G13
6715 G13
6716 G6
6717 G7
6718 H9
6719 H9
6720 I9
7701 H2
7702-1 B5
7702-2 B6
7703 C4
7704 E5
7705 I12
7706 I12
7707 I13
7708 E10
F701 E2
F702 E2
F703 E2
F704 E2
F705 E2
F706 F3
F707 F3
F708 F3
F709 F3
F710 F3
F711 F3
F712 F3
F713 G3
F714 G3
F715 D10
F716 C9
F717 C11
F718 B2
F719 B2
F720 B2
F721 D2
F723 D2
F724 D2
F725 E6
F726 H3
F727 I3
F728 I4
F729 D8
F730 E10
F731 D11
F732 F10
F733 G9
F734 C4
F735 D2

Front: Display (topview)

1701 A4 1703 A1 1707 A7 1709 A7 1711 A1 1713 A4 1715 A7 1717 A6 2722 A5 7701 A2
1702 A1 1705 A7 1708 A1 1710 A1 1712 A5 1714 A3 1716 A2 2721 A6 6700 A2

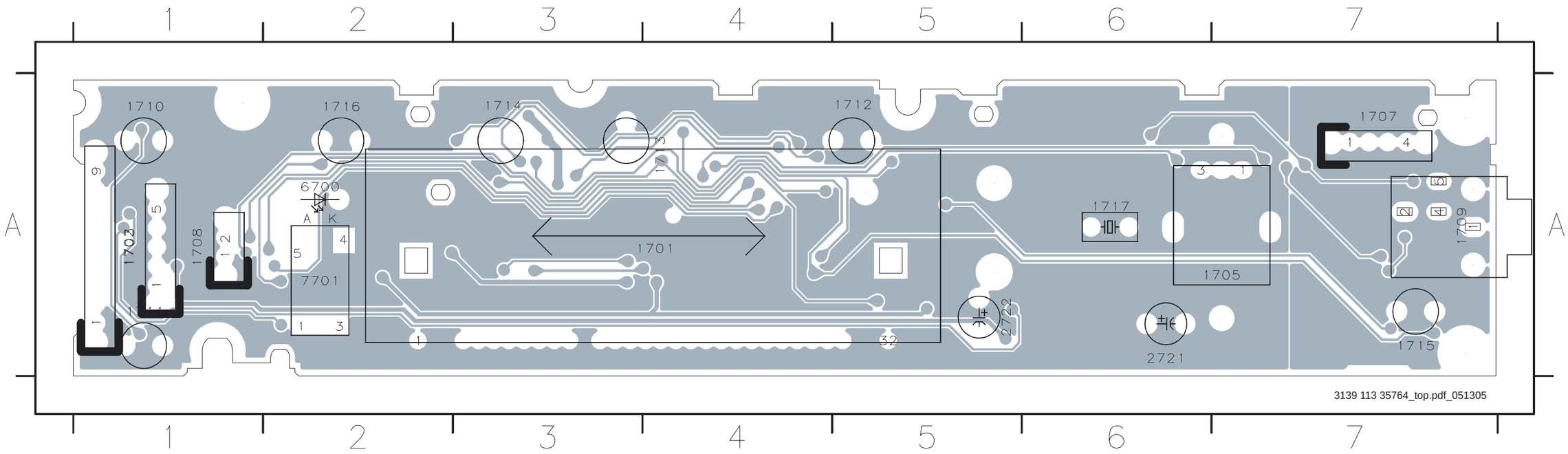

Front: Display (Bottom view)

2700 A1	2708 A1	2716 A7	2726 A3	3706 A1	3714 A6	3722 A6	3730 A3	3738 A2	3746 A5	6702 A6	6710 A5	6718 A3	7707 A2
2701 A1	2709 A1	2717 A7	2729 A1	3707 A1	3715 A3	3723 A6	3731 A5	3739 A1	4700 A4	6703 A1	6711 A5	6719 A4	7708 A4
2702 A1	2710 A4	2718 A6	3700 A1	3708 A1	3716 A6	3724 A6	3732 A2	3740 A1	4701 A4	6704 A5	6712 A5	6720 A3	
2703 A1	2711 A3	2719 A2	3701 A1	3709 A1	3717 A6	3725 A6	3733 A2	3741 A5	4702 A5	6705 A5	6713 A5	7702 A1	
2704 A1	2712 A7	2720 A2	3702 A1	3710 A6	3718 A6	3726 A6	3734 A3	3742 A5	4703 A1	6706 A5	6714 A5	7703 A1	
2705 A1	2713 A7	2723 A2	3703 A1	3711 A3	3719 A6	3727 A6	3735 A2	3743 A5	4704 A2	6707 A5	6715 A5	7704 A6	
2706 A1	2714 A7	2724 A3	3704 A1	3712 A6	3720 A6	3728 A5	3736 A2	3744 A5	5700 A1	6708 A5	6716 A3	7705 A2	
2707 A1	2715 A2	2725 A6	3705 A1	3713 A3	3721 A6	3729 A1	3737 A2	3745 A6	6701 A3	6709 A5	6717 A3	7706 A2	

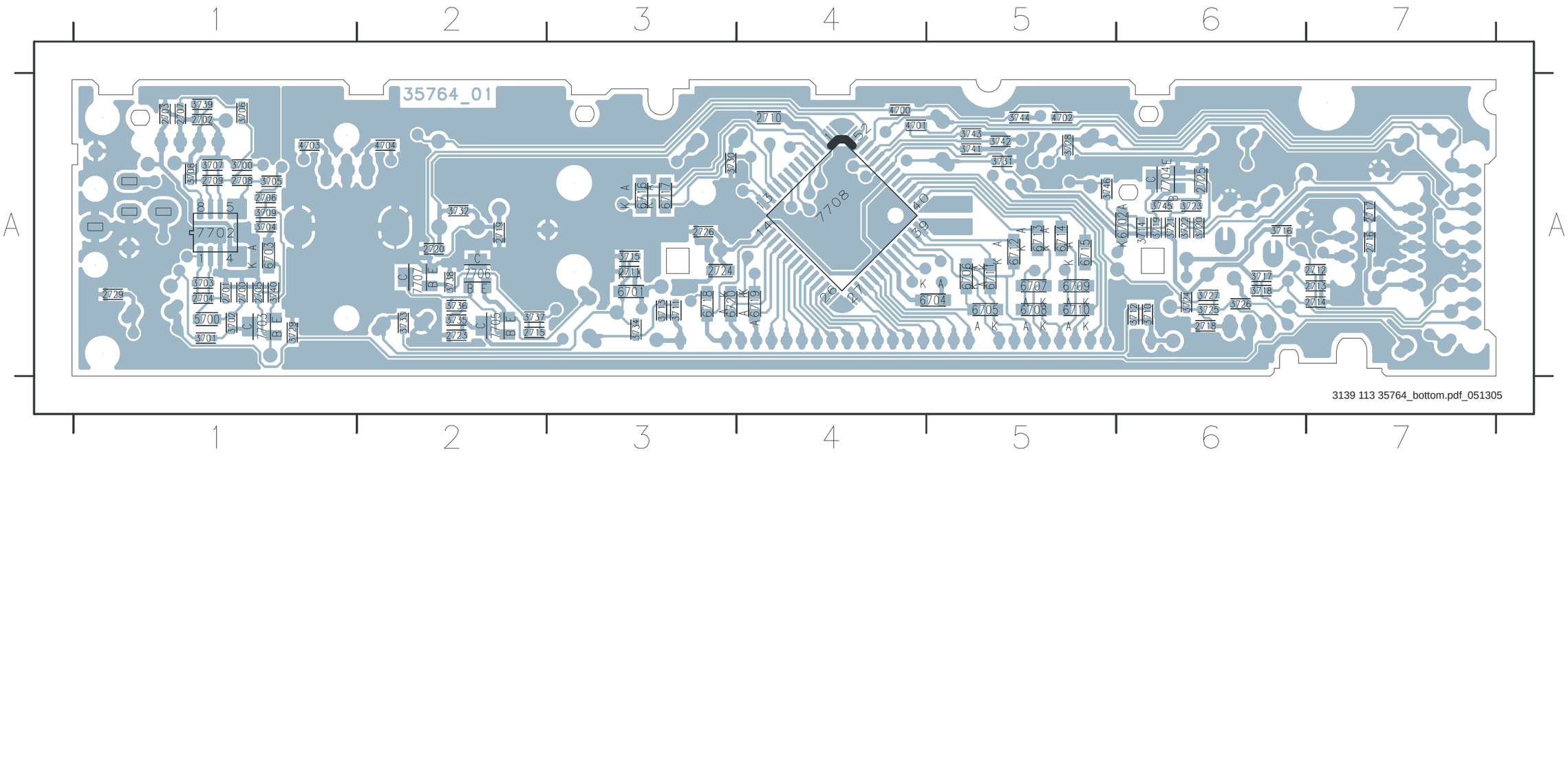

Front: Standby

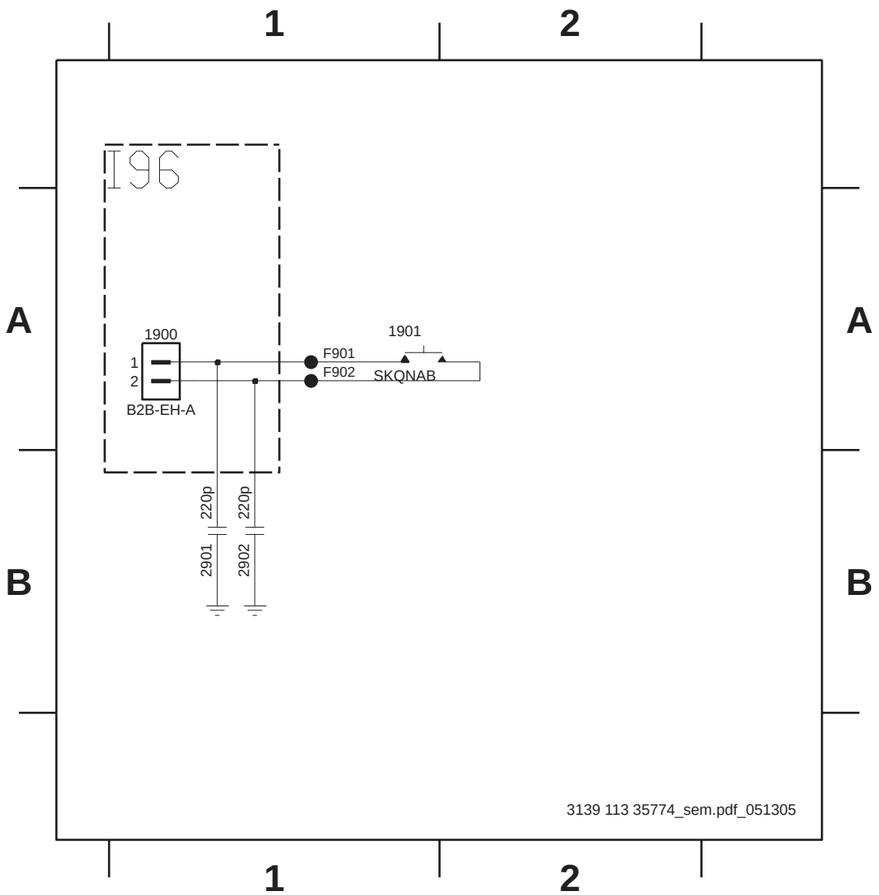

1900 A1
1901 A1
2901 B1
2902 B1
F901 A1
F902 A1

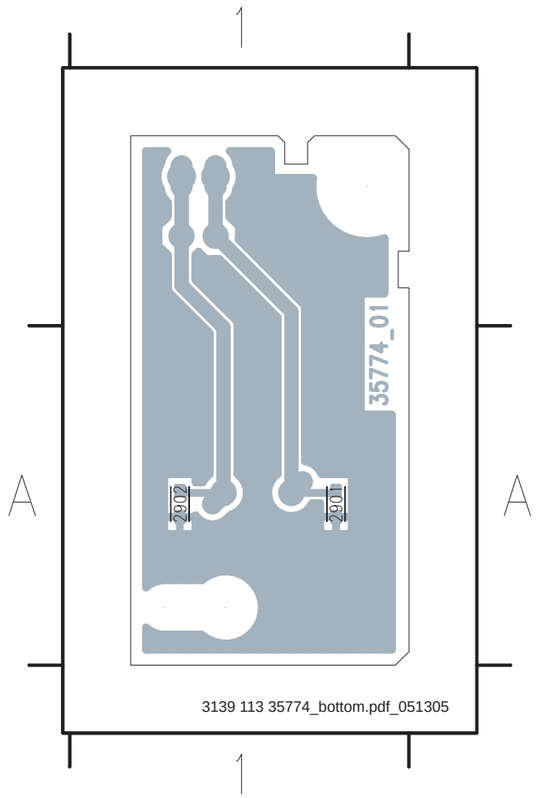

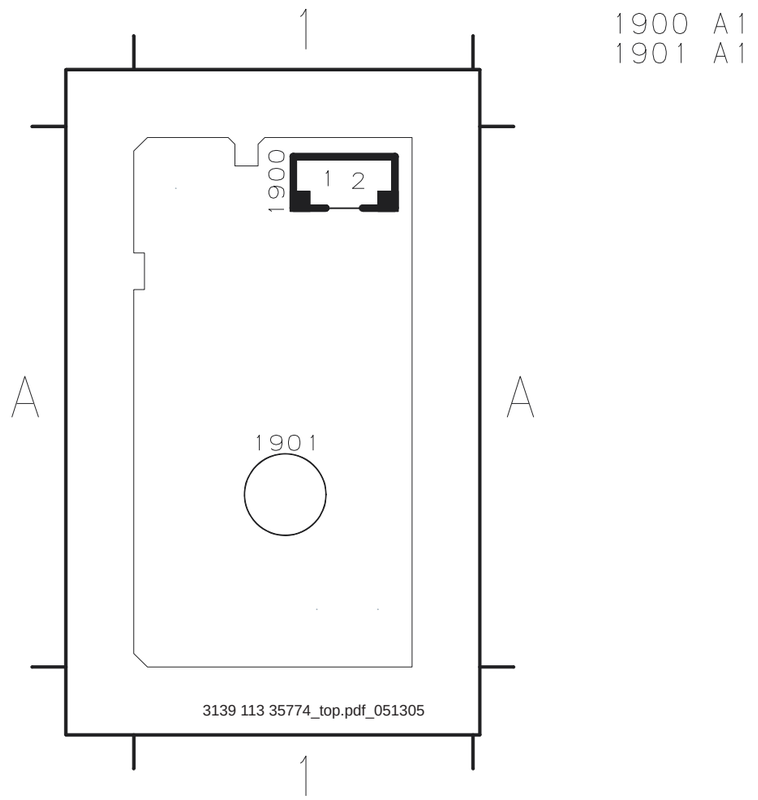

Mono Board: Circuit Diagram (Part 1)

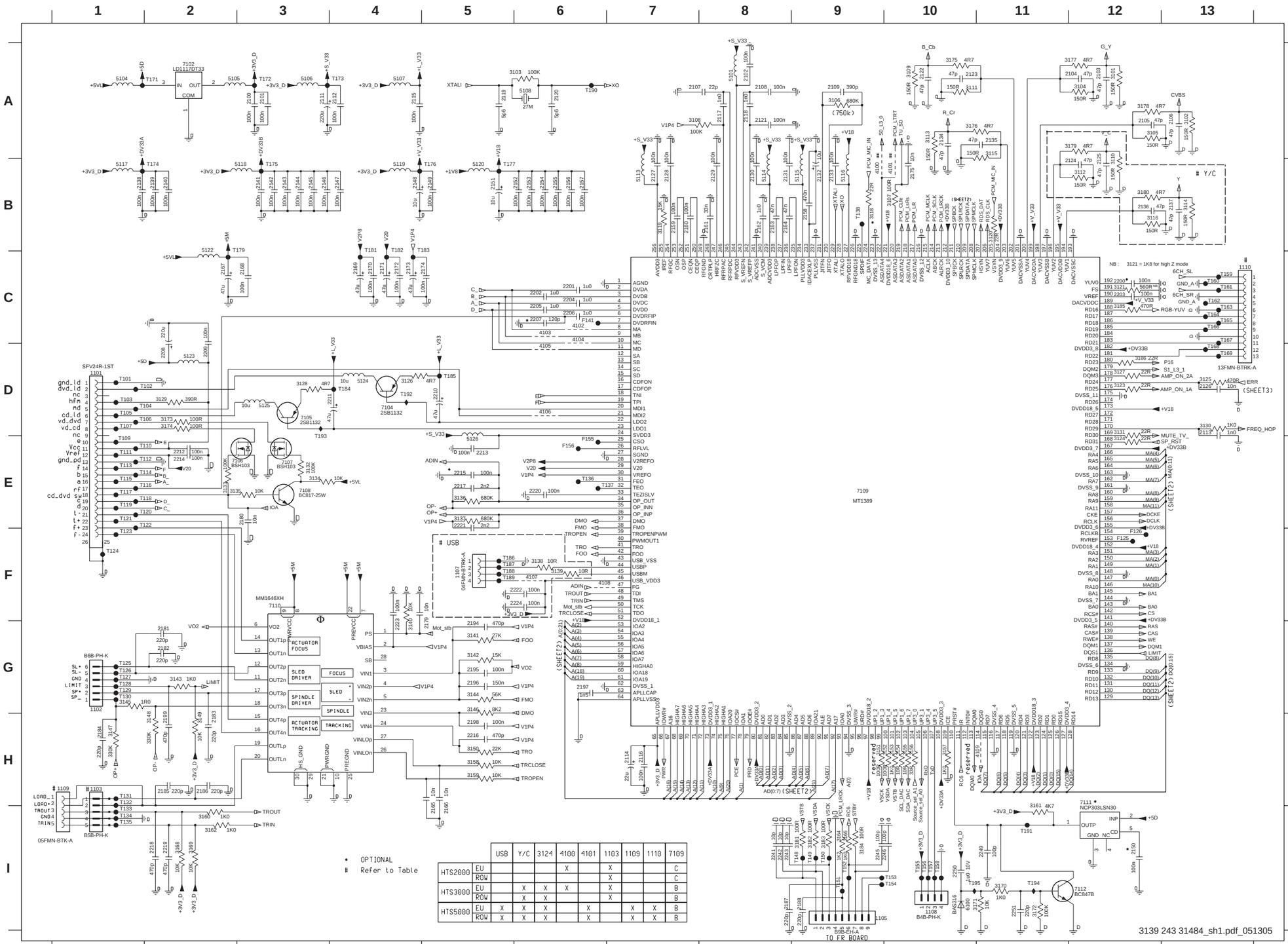

		USB	Y/C	3124	4100	4101	1103	1109	1110	7109
HTS2000	EU				X		X			C
	ROW						X			C
HTS3000	EU		X	X	X		X			B
	ROW		X	X			X			B
HTS5000	EU	X	X	X		X		X	X	B
	ROW	X	X	X		X		X	X	B

1101 D1	2219 I2	5120 B5
1102 G1	2220 E6	5122 C2
1103 H1	2221 E5	5123 D2
1105 I9	2222 F6	5124 D4
1107 F5	2223 G4	5125 D3
1108 I10	2224 F6	5126 E5
1109 H1	2241 I8	6100 I10
1110 C13	2242 I8	7102 A2
2100 A3	2243 I8	7104 D4
2101 A3	2245 I9	7105 D3
2102 A8	2246 I9	7106 E2
2103 A12	2249 I11	7107 E3
2104 A12	2250 I10	7108 E3
2105 A12	2251 I11	7109 E9
2106 A13	3101 A12	7110 F3
2107 A7	3102 A13	7111 H12
2108 A8	3103 A6	7112 I12
2109 A9	3104 A12	F125 F12
2111 A3	3105 A12	F126 F12
2112 A4	3106 A9	F141 C6
2113 D13	3107 B10	F155 E6
2114 H7	3108 A7	F156 E6
2115 A4	3109 A10	T101 D1
2116 H7	3110 B12	T102 D2
2117 A8	3111 A10	T103 D1
2118 A8	3112 B12	T104 D2
2119 A5	3113 A10	T105 D1
2120 A6	3114 B13	T106 D2
2121 A8	3115 A11	T107 D1
2122 A10	3116 B12	T109 E1
2123 A10	3118 B9	T110 E2
2124 B12	3119 B7	T111 E1
2125 B12	3120 B11	T112 E2
2126 D13	3121 C12	T113 E1
2127 B7	3123 D12	T114 E2
2128 B7	3124 E12	T115 E1
2129 B8	3125 D13	T116 E2
2130 B8	3126 D4	T117 E1
2131 B8	3127 D12	T118 E2
2132 B9	3128 D3	T119 E1
2133 B9	3129 D2	T120 E2
2134 A10	3130 D13	T121 E1
2135 A11	3131 D12	T122 E2
2136 B12	3132 E3	T123 F1
2137 B13	3133 E2	T124 F1
2138 B1	3134 E3	T125 G1
2139 B2	3135 E2	T126 G1
2140 B2	3136 E5	T127 G1
2141 B3	3137 E5	T128 G1
2142 B3	3138 F6	T129 G1
2143 B3	3139 F6	T130 G1
2144 B3	3140 G4	T131 H1
2145 B3	3141 G5	T132 H1
2146 B3	3142 G5	T133 I1
2147 B4	3143 G2	T134 I1
2148 B4	3144 G5	T135 I1
2149 B5	3145 G1	T136 E6
2150 I12	3146 G5	T137 E7
2151 B5	3147 H1	T138 B9
2152 B6	3148 H2	T148 I9
2153 B6	3149 H2	T149 I9
2154 B6	3150 H5	T150 I9
2155 B6	3151 H9	T151 I9
2156 B6	3152 H9	T152 I9
2157 B6	3153 H10	T153 I10
2158 B9	3154 H10	T154 I10
2159 B7	3155 H10	T155 I10
2160 B7	3156 H10	T156 I10
2161 B8	3157 H10	T157 I10
2162 B8	3158 H5	T158 I10
2163 B8	3159 H5	T159 C13
2164 B8	3160 I2	T160 C13
2165 I5	3161 H11	T161 C13
2166 I5	3162 I2	T162 C13
2167 C2	3164 I9	T163 C13
2168 C3	3165 I9	T164 C13
2169 C4	3168 I2	T165 C13
2170 C4	3169 I2	T166 C13
2171 C4	3170 I11	T167 C13
2172 C4	3171 I11	T168 D13
2173 C4	3172 I11	T169 D13
2174 C5	3173 D2	T171 A2
2175 B10	3174 D2	T172 A3
2179 G5	3175 A10	T173 A4
2180 E3	3176 A10	T174 B2
2181 G2	3177 A12	T175 B3
2182 G2	3178 A12	T176 B5
2183 H2	3179 A12	T177 B5
2184 H1	3180 B12	T179 C3
2185 H2	3181 I9	T181 C4
2186 H2	3182 I9	T182 C4
2187 I8	3183 I9	T183 C5
2188 I9	3184 I9	T184 D4
2194 G5	3185 C12	T185 D5
2195 G5	3186 D12	T186 F5
2196 G5	4100 B9	T187 F5
2197 G6	4101 B10	T188 F5
2198 H5	4102 C6	T189 F5
2199 H2	4103 C6	T190 A6
2200 C12	4104 C6	T191 I11
2201 C6	4105 D6	T192 D4
2202 C6	4106 D6	T193 E3
2203 C12	4107 F6	T194 I11
2204 C6	4108 F6	T195 I10
2205 C6	4109 H10	
2206 C6	5101 A8	
2207 C6	5104 A1	
2208 D2	5105 A2	
2209 D2	5106 A3	
2210 D5	5107 A4	
2211 D3	5108 A6	
2212 E2	5113 B7	
2213 E5	5114 B8	
2214 E2	5115 B9	
2215 E5	5116 B9	
2216 H5	5117 B1	
2217 E5	5118 B3	
2218 I2	5119 B4	

Mono Board: Circuit Diagram (Part 2)

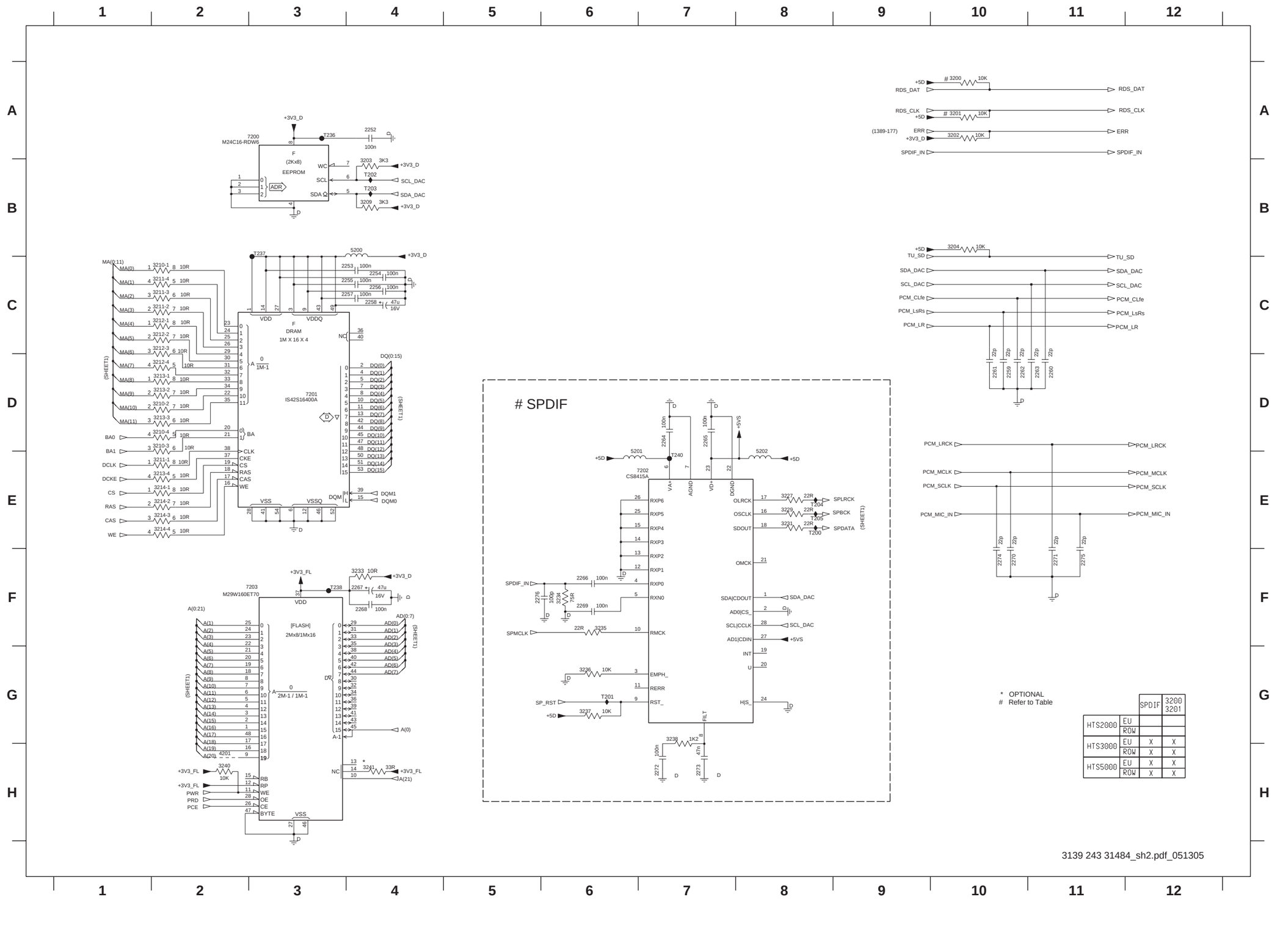

2252 A4
2253 C4
2254 C4
2255 C4
2256 C4
2257 C4
2258 C4
2259 D10
2260 D11
2261 D10
2262 D10
2263 D11
2264 D7
2265 D7
2266 F6
2267 F4
2268 F4
2269 F6
2270 F10
2271 F11
2272 H7
2273 H7
2274 F10
2275 F11
2276 F5
3200 A10
3201 A10
3202 A10
3203 B4
3204 B10
3209 B4
3210-1 C2
3210-2 D2
3210-3 D2
3210-4 D2
3211-1 E2
3211-2 C2
3211-3 C2
3211-4 C2
3212-1 C2
3212-2 C2
3212-3 C2
3212-4 D2
3213-1 D2
3213-2 D2
3213-3 D2
3213-4 E2
3214-1 E2
3214-2 E2
3214-3 E2
3214-4 E2
3227 E8
3229 E8
3231 E8
3233 F4
3234 F6
3235 F6
3236 G6
3237 G6
3238 G7
3240 H2
3241 H4
4201 H2
5200 B4
5201 E6
5202 E8
7200 A3
7201 D3
7202 E7
7203 F3
T200 E8
T201 G6
T202 B4
T203 B4
T204 E8
T205 E8
T236 A3
T237 B3
T238 F3
T240 E7

Mono Board: Circuit Diagram (Part 3)

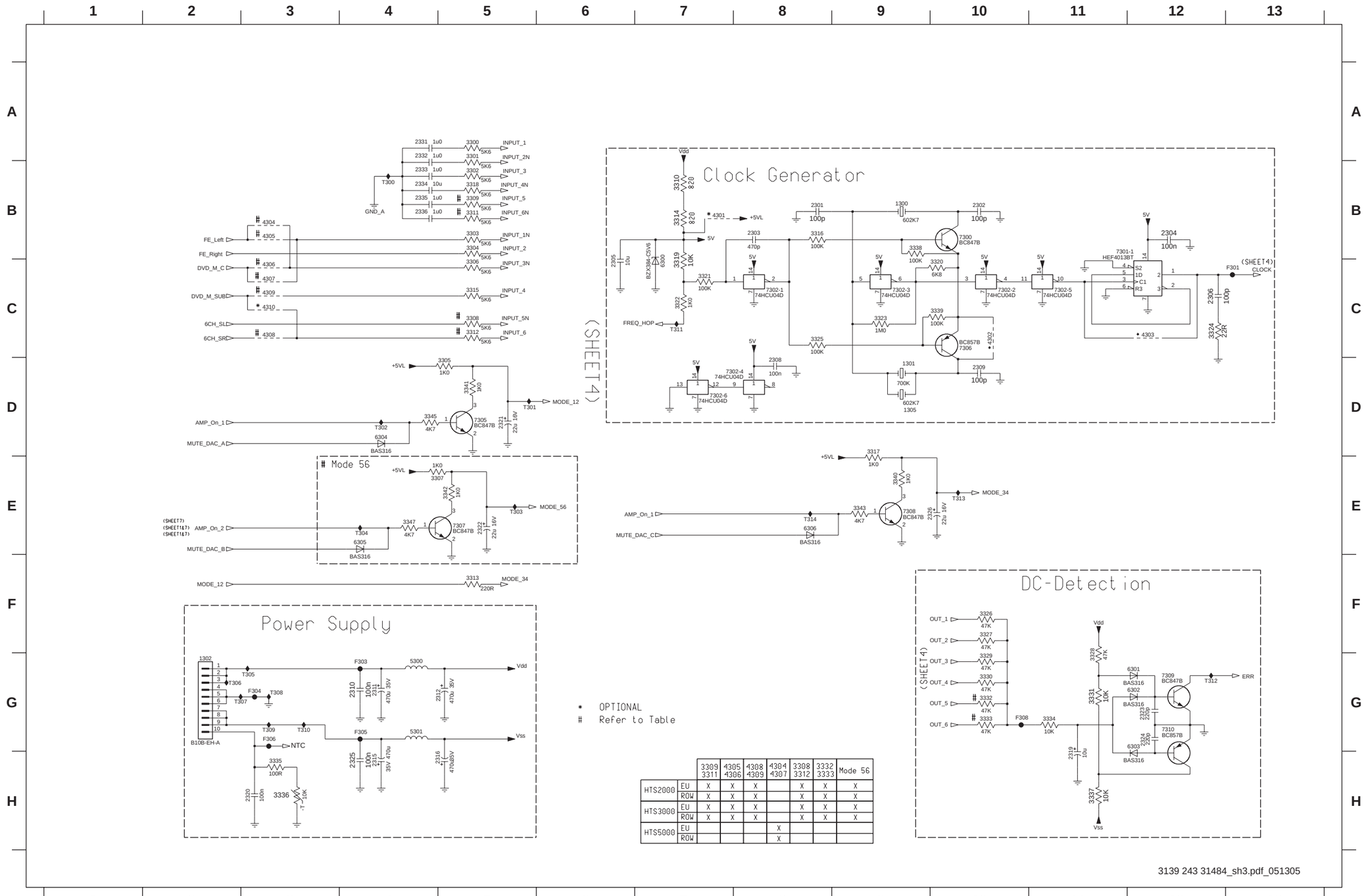

		3309 3311	4305 4306	4308 4309	4304 4307	3308 3312	3332 3333	Mode 56
HTS2000	EU	X	X	X		X	X	X
	ROW	X	X	X		X	X	X
HTS3000	EU	X	X	X		X	X	X
	ROW	X	X	X		X	X	X
HTS5000	EU				X			
	ROW				X			

1300 B9
1301 D9
1302 G2
1305 D9
2301 B8
2302 B10
2303 B8
2304 B12
2305 C6
2306 C12
2308 D8
2309 D10
2310 G4
2311 G4
2312 G5
2315 H4
2316 H5
2319 H11
2320 H3
2321 D5
2322 E5
2323 G12
2324 G12
2325 H4
2326 E10
2331 A4
2332 A4
2333 B4
2334 B4
2335 B4
2336 B4
3300 A5
3301 A5
3302 B5
3303 B5
3304 B5
3305 D5
3306 C5
3307 E4
3308 C5
3309 B5
3310 B7
3311 B5
3312 C5
3313 F5
3314 B7
3315 C5
3316 B8
3317 D9
3318 B5
3319 C7
3320 C10
3321 C7
3322 C7
3323 C9
3324 C12
3325 C8
3326 F10
3327 F10
3328 G11
3329 G10
3330 G10
3331 G11
3332 G10
3333 G10
3334 G11
3335 H3
3336 H3
3337 H11
3338 B9
3339 C10
3340 E9
3341 D5
3342 E5
3343 E9
3345 D4
3347 E4
4301 B7
4302 C10
4303 C12
4304 B3
4305 B3
4306 C3
4307 C3
4308 C3
4309 C3
4310 C3
5300 G4
5301 G4
6300 C7
6301 G12
6302 G12
6303 G12
6304 D4
6305 E4
6306 E8
7300 B10
7301-1 B12
7302-1 C8
7302-2 C10
7302-3 C9
7302-4 D8
7302-5 C11
7302-6 D7
7305 D5
7306 C10
7307 E5
7308 E9
7309 G12
7310 G12
F301 C13
F303 G4
F304 G3
F305 G4
F306 G3
F308 G10
T300 B4
T301 D5
T302 D4
T303 E5
T304 E4
T305 G3
T306 G2
T307 G2
T308 G3
T309 G3
T310 G3
T311 C7
T312 G12
T313 E10
T314 E8

Mono Board: Circuit Diagram (Part 4)

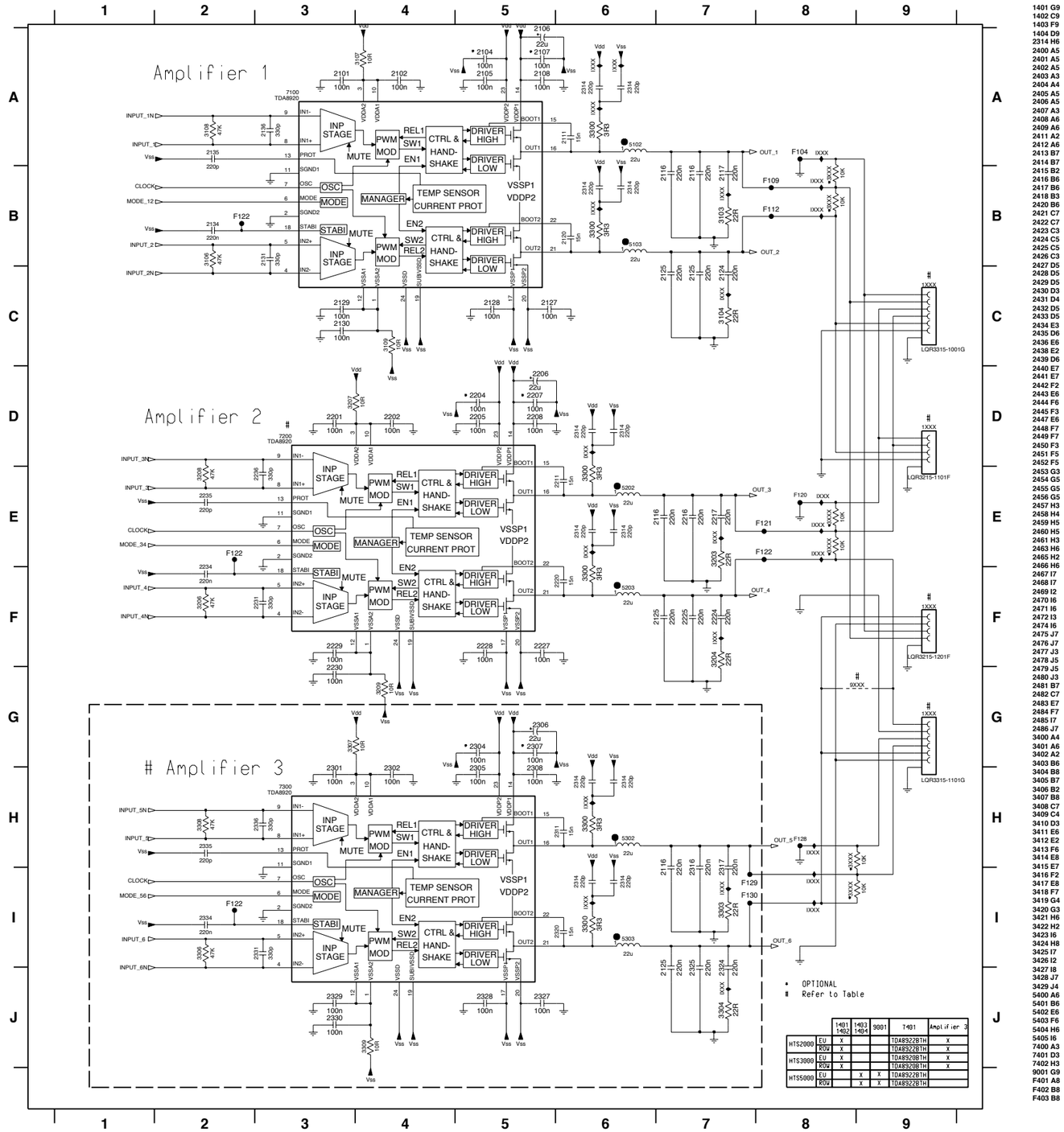

		1401 1402	1403 1404	9001	1401	Amplifier 3
HTS2000	EU	X			TDA8922BTH	X
	ROW	X			TDA8922BTH	X
HTS3000	EU	X			TDA8920BTH	X
	ROW	X			TDA8920BTH	X
HTS5000	EU		X	X	TDA8922BTH	
	ROW		X	X	TDA8922BTH	

1401 G9 F405 E8
1402 C9 F406 E8
1403 F9 F407 E8
1404 D9 F409 H8
2314 H6 F410 I7
2400 A5 F411 I7
2401 A5 F415 B2
2402 A5 F416 E2
2403 A3 F417 I2
2404 A4 T400 A8
2405 A5 T401 B8
2406 A5 T402 B8
2407 A3 T403 E8
2408 A6 T404 E8
2409 A6 T405 E8
2411 A2 T406 H6
2412 A6 T407 I8
2413 B7 T408 I8
2414 B7 T409 A6
2415 B2 T410 A6
2416 B6 T411 A6
2417 B6 T412 B6
2418 B3 T413 B7
2420 B6 T414 C7
2421 C7 T415 D6
2422 C7 T416 E6
2423 C3 T417 E7
2424 C5 T418 F7
2425 C5 T419 H6
2426 C3 T420 I6
2427 D5 T421 I7
2428 D5 T422 J7
2429 D5
2430 D3
2431 D4
2432 D5
2433 D5
2434 E3
2435 D6
2436 E6
2438 E2
2439 D6
2440 E7
2441 E7
2442 F2
2443 E6
2444 F6
2445 F3
2447 E6
2448 F7
2449 F7
2450 F3
2451 F5
2452 F5
2453 G3
2454 G5
2455 G5
2456 G5
2457 H3
2458 H4
2459 H5
2460 H5
2461 H3
2463 H6
2465 H2
2466 H6
2467 I7
2468 I7
2469 I2
2470 I6
2471 I6
2472 I3
2474 I6
2475 J7
2476 J7
2477 J3
2478 J5
2479 J5
2480 J3
2481 B7
2482 C7
2483 E7
2484 F7
2485 I7
2486 J7
3400 A4
3401 A6
3402 A2
3403 B6
3404 B8
3405 B7
3406 B2
3407 B8
3408 C7
3409 C4
3410 D3
3411 E6
3412 E2
3413 F6
3414 E8
3415 E7
3416 F2
3417 E8
3418 F7
3419 G4
3420 G3
3421 H6
3422 H2
3423 I6
3424 H8
3425 I7
3426 I2
3427 I8
3428 J7
3429 J4
5400 A6
5401 B6
5402 E6
5403 F6
5404 H6
5405 I6
7400 A3
7401 D3
7402 H3
9001 G9
F401 A8
F402 B8
F403 B8

Mono Board: Circuit Diagram (Part 5)

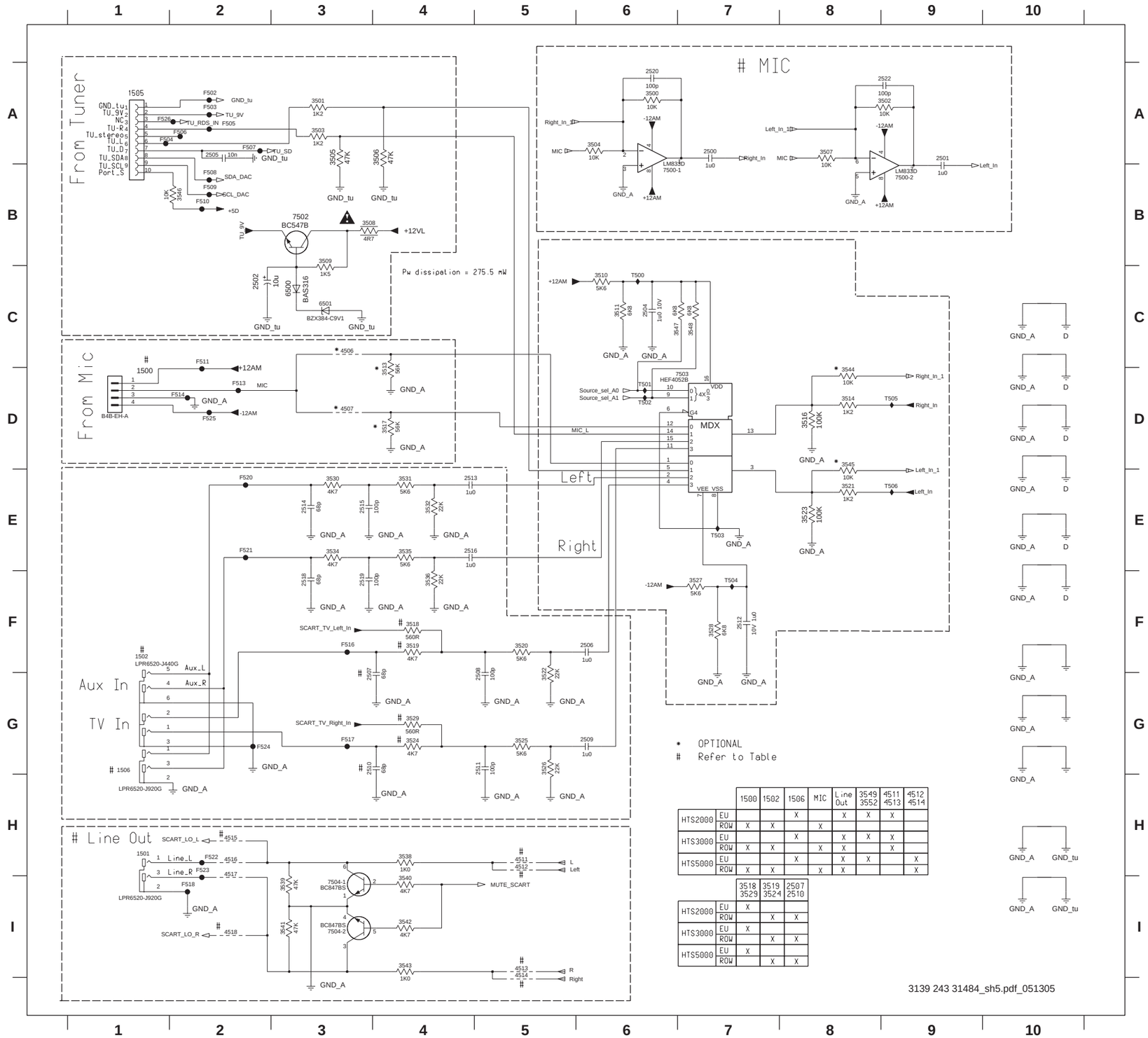

		1500	1502	1506	MIC	Line Out	3549 3552	4511 4513	4512 4514
HTS2000	EU			X		X	X	X	
	ROW	X	X		X				
HTS3000	EU			X		X	X	X	
	ROW	X	X		X	X		X	
HTS5000	EU			X		X	X		X
	ROW	X	X		X	X			X

		3518 3529	3519 3524	2507 2510
HTS2000	EU	X		
	ROW		X	X
HTS3000	EU	X		
	ROW		X	X
HTS5000	EU	X		
	ROW		X	X

1500 D1
1501 H1
1502 F1
1506 G1
2500 A7
2501 A9
2502 C2
2504 C6
2505 A2
2506 F6
2507 G3
2508 G5
2509 G6
2510 G3
2511 G5
2512 F7
2513 E4
2514 E3
2515 E3
2516 E4
2518 F3
2519 F3
2520 A6
2522 A9
3500 A6
3501 A3
3502 A9
3503 A3
3504 A6
3505 A3
3506 A4
3507 A8
3508 B3
3509 B3
3510 C6
3511 C6
3513 D4
3514 D8
3516 D8
3517 D4
3518 F4
3519 F4
3520 F5
3521 E8
3522 G5
3523 E8
3524 G4
3525 G5
3526 G5
3527 F7
3528 F7
3529 G4
3530 E3
3531 E4
3532 E4
3534 E3
3535 E4
3536 F4
3538 H4
3539 I3
3540 I4
3541 I3
3542 I4
3543 I4
3544 D8
3545 D8
3546 B2
3547 C7
3548 C7
4506 C3
4507 D3
4511 H5
4512 H5
4513 I5
4514 I5
4515 H2
4516 H2
4517 H2
4518 I2
6500 C3
6501 C3
7500-1 B6
7500-2 B9
7502 B3
7503 D7
7504-1 I3
7504-2 I3
F502 A2
F503 A2
F504 A1
F505 A2
F506 A2
F507 A2
F508 B2
F509 B2
F510 B2
F511 C2
F513 D2
F514 D2
F516 F3
F517 G3
F518 I2
F520 E2
F521 E2
F522 H2
F523 H2
F524 G2
F525 D2
F526 A1
T500 C6
T501 D6
T502 D6
T503 E7
T504 F7
T505 D9
T506 E9

Mono Board: Circuit Diagram (Part 6)

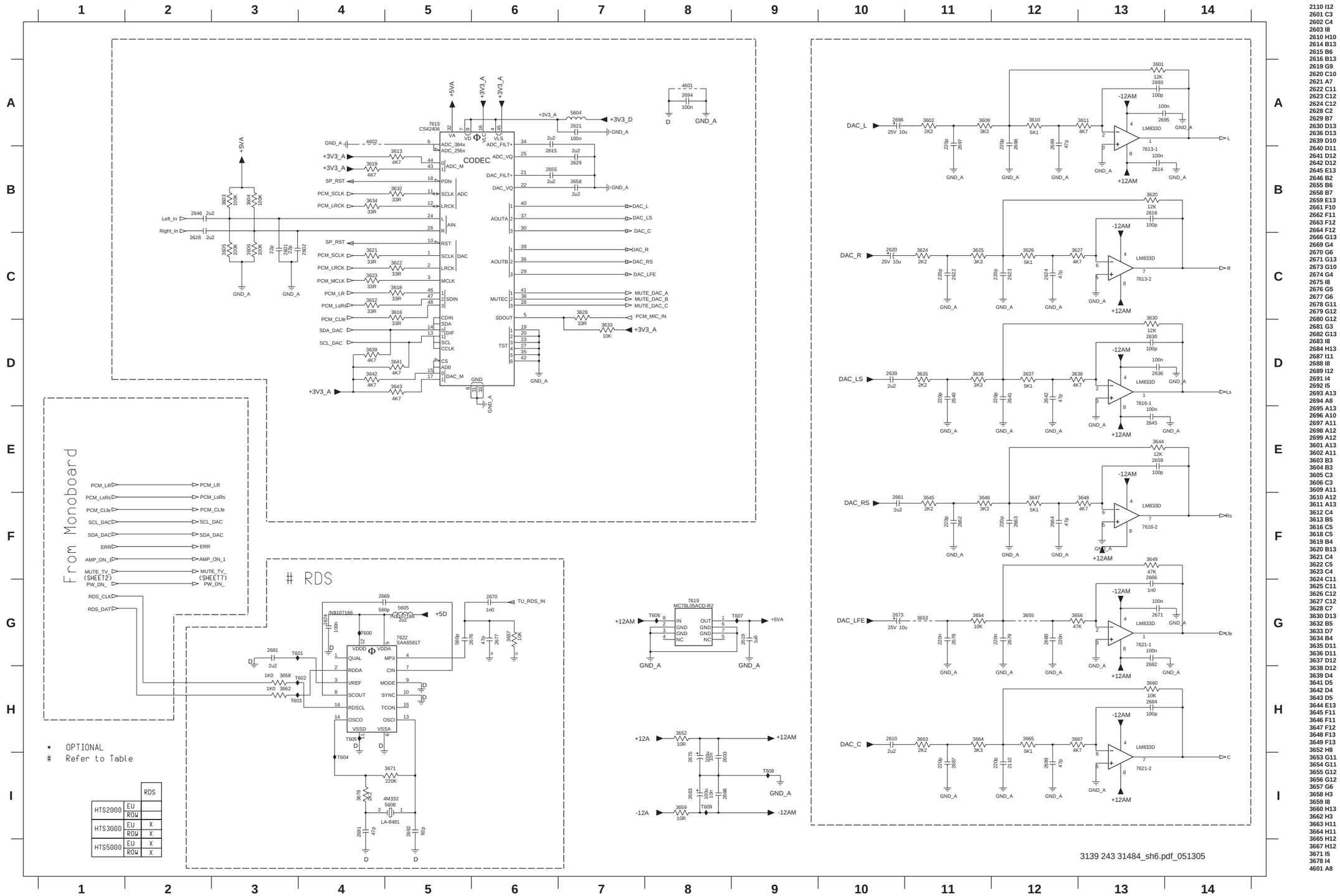

2110 I12
2601 C3
2602 C4
2603 I8
2610 H10
2614 B13
2615 B6
2616 B13
2619 G9
2620 C10
2621 A7
2622 C11
2623 C12
2624 C12
2628 C2
2629 B7
2630 D13
2636 D13
2639 D10
2640 D11
2641 D12
2642 D12
2645 E13
2646 B2
2655 B6
2658 B7
2659 E13
2661 F10
2662 F11
2663 F12
2664 F12
2666 G13
2669 G4
2670 G6
2671 G13
2673 G10
2674 G4
2675 I8
2676 G5
2677 G6
2678 G11
2679 G12
2680 G12
2681 G3
2682 G13
2683 I8
2684 H13
2687 I11
2688 I8
2689 I12
2691 I4
2692 I5
2693 A13
2694 A8
2695 A13
2696 A10
2697 A11
2698 A12
2699 A12
3601 A13
3602 A11
3603 B3
3604 B3
3605 C3
3606 C3
3609 A11
3610 A12
3611 A13
3612 C4
3613 B5
3616 C5
3618 C5
3619 B4
3620 B13
3621 C4
3622 C5
3623 C4
3624 C11
3625 C11
3626 C12
3627 C12
3628 C7
3630 D13
3632 B5
3633 D7
3634 B4
3635 D11
3636 D11
3637 D12
3638 D12
3639 D4
3641 D5
3642 D4
3643 D5
3644 E13
3645 F11
3646 F11
3647 F12
3648 F13
3649 F13
3652 H8
3653 G11
3654 G11
3655 G12
3656 G12
3657 G6
3658 H3
3659 I8
3660 H13
3662 H3
3663 H11
3664 H11
3665 H12
3667 H12
3671 I5
3678 I4
4601 A8
4602 A4
5604 A7
5605 G5
5606 I5
7613-1 B13
7613-2 C13
7615 A5
7616-1 D13
7616-2 F13
7619 G8
7621-1 G13
7621-2 I13
7622 G5
T600 G4
T601 G3
T602 H4
T603 H3
T604 I4
T605 H4
T606 G8
T607 G9
T608 I9
T609 I8

Mono Board: Circuit Diagram(Part 7)

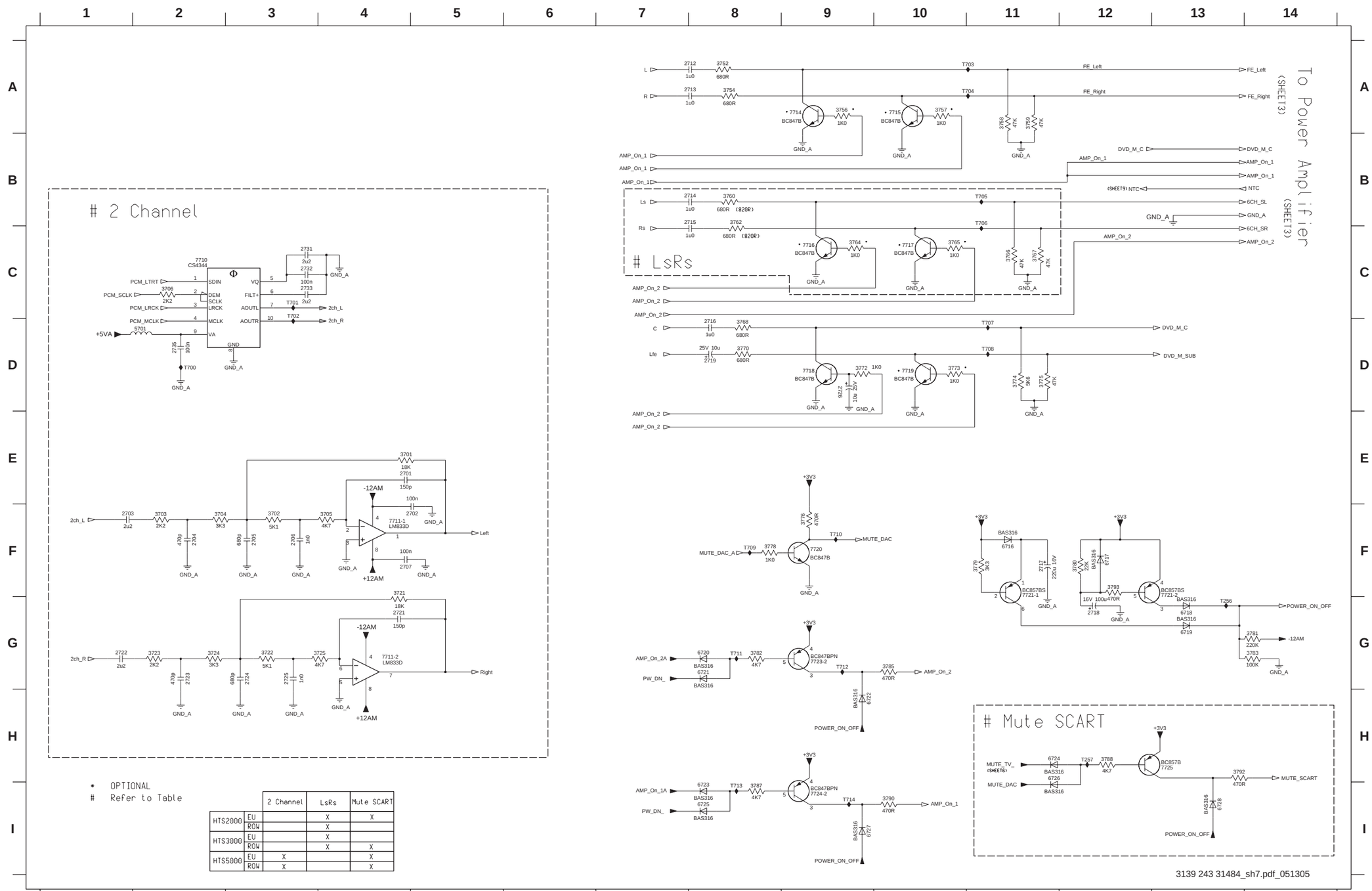

		2 Channel	LsRs	Mute SCART
HTS2000	EU		X	X
	ROW		X	
HTS3000	EU		X	
	ROW		X	X
HTS5000	EU	X		X
	ROW	X		X

3139 243 31484_sh7.pdf_051305

2701 E4 T713 I8
2702 F5 T714 I9
2703 F1
2704 F2
2705 F3
2706 F3
2707 F4
2712 A8
2713 A8
2714 B8
2715 B8
2716 D8
2717 F11
2718 G12
2719 D8
2721 G4
2722 G1
2723 G2
2724 G3
2725 G3
2726 D9
2731 C3
2732 C3
2733 C3
2735 D2
3701 E4
3702 F3
3703 F2
3704 F2
3705 F4
3706 C2
3721 F4
3722 G3
3723 G2
3724 G2
3725 G4
3752 A8
3754 A8
3756 A9
3757 A10
3758 A11
3759 A11
3760 B8
3762 B8
3764 C9
3765 C10
3766 C11
3767 C11
3768 D8
3770 D8
3772 D9
3773 D10
3774 D11
3775 D11
3776 F9
3778 F8
3779 F11
3780 F12
3781 G14
3782 G8
3783 G14
3785 G10
3787 I8
3788 H12
3790 I10
3792 H13
3793 F12
5701 D2
6716 F11
6717 F12
6718 G13
6719 G13
6720 G8
6721 G8
6722 H9
6723 I8
6724 H11
6725 I8
6726 H11
6727 I9
6728 I13
7710 C2
7711-1 F4
7711-2 G4
7714 A9
7715 A10
7716 C9
7717 C10
7718 D9
7719 D10
7720 F9
7721-1 F11
7721-2 F13
7723-2 G9
7724-2 I9
7725 H13
T256 G13
T257 H12
T700 D2
T701 C3
T702 C3
T703 A11
T704 A11
T705 B11
T706 B11
T707 D11
T708 D11
T709 F8
T710 F9
T711 G8
T712 G9

Mono Board: Circuit Diagram (Part 8)

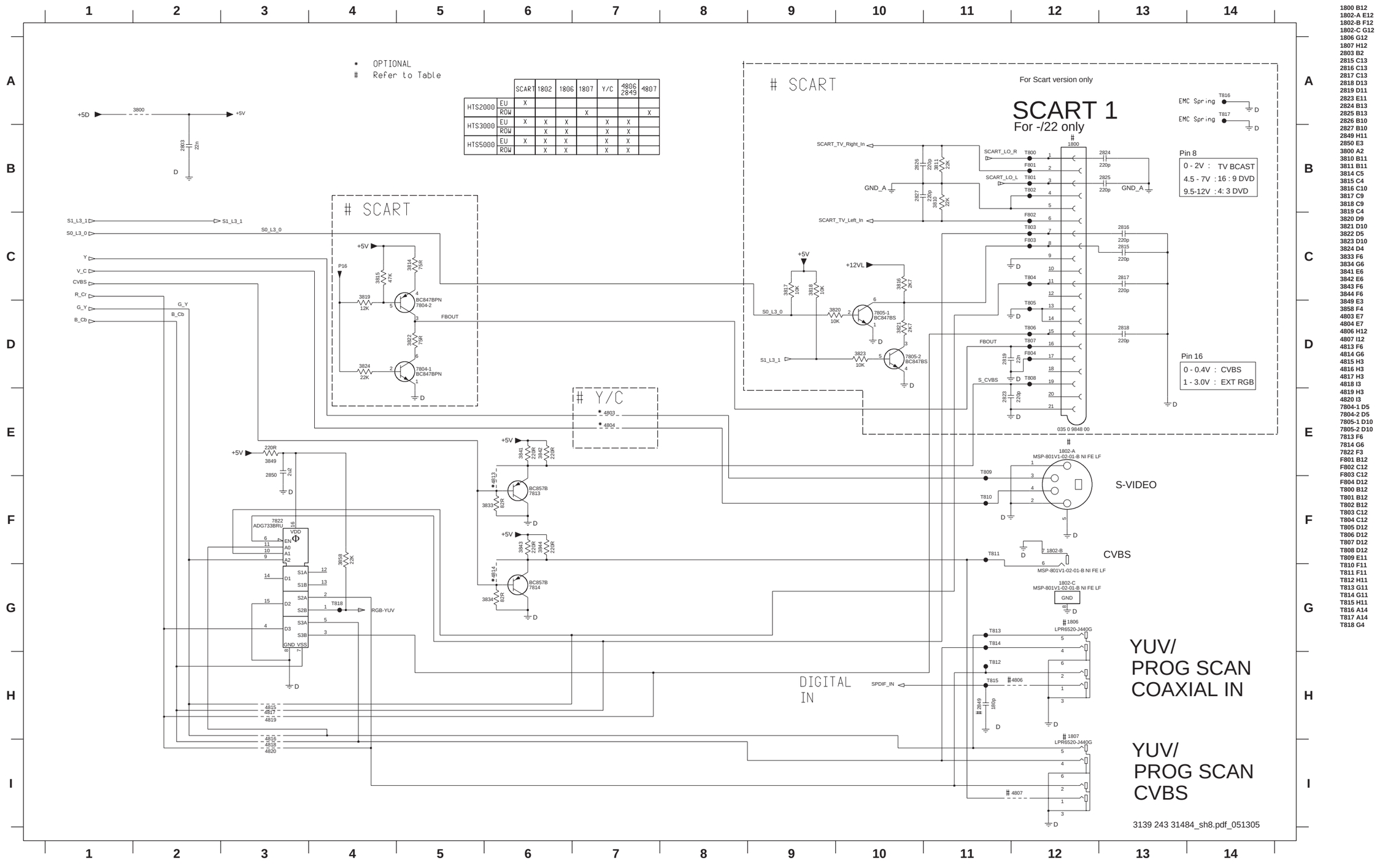

		SCART	1802	1806	1807	Y/C	4806 2849	4807
HTS2000	EU	X						
	ROW				X			X
HTS3000	EU	X	X	X		X	X	
	ROW		X	X		X	X	
HTS5000	EU	X	X	X		X	X	
	ROW		X	X		X	X	

1800 B12
1802-A E12
1802-B F12
1802-C G12
1806 G12
1807 H12
2803 B2
2815 C13
2816 C13
2817 C13
2818 D13
2819 D11
2823 E11
2824 B13
2825 B13
2826 B10
2827 B10
2849 H11
2850 E3
3800 A2
3810 B11
3811 B11
3814 C5
3815 C4
3816 C10
3817 C9
3818 C9
3819 C4
3820 D9
3821 D10
3822 D5
3823 D10
3824 D4
3833 F6
3834 G6
3841 E6
3842 E6
3843 F6
3844 F6
3849 E3
3858 F4
4803 E7
4804 E7
4806 H12
4807 I12
4813 F6
4814 G6
4815 H3
4816 H3
4817 H3
4818 I3
4819 H3
4820 I3
7804-1 D5
7804-2 D5
7805-1 D10
7805-2 D10
7813 F6
7814 G6
7822 F3
F801 B12
F802 C12
F803 C12
F804 D12
T800 B12
T801 B12
T802 B12
T803 C12
T804 C12
T805 D12
T806 D12
T807 D12
T808 D12
T809 E11
T810 F11
T811 F11
T812 H11
T813 G11
T814 G11
T815 H11
T816 A14
T817 A14
T818 G4

Mono Board: Circuit Diagram (Part 9)

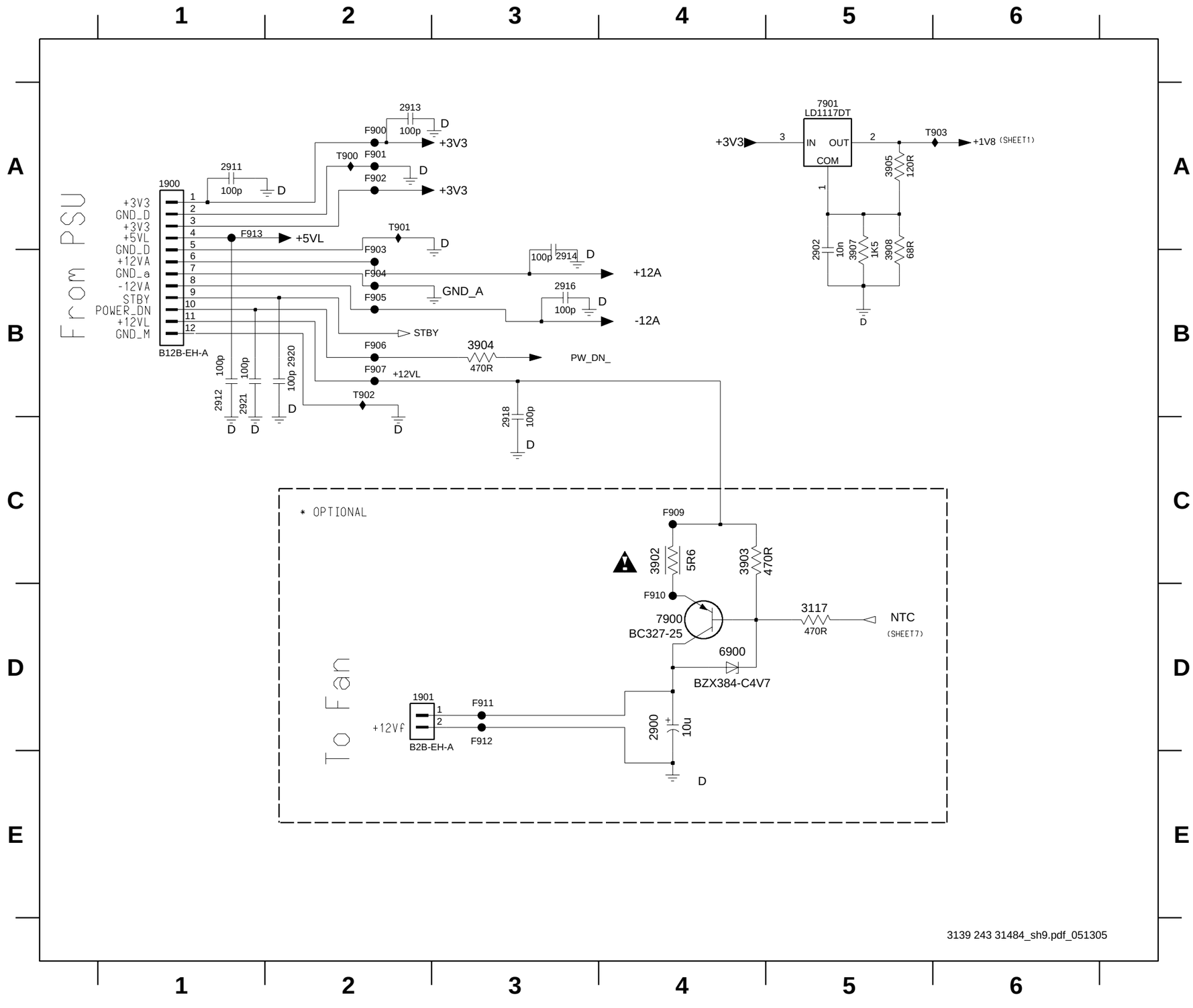

3139 243 31484_sh9.pdf_051305

1900 A1
1901 D2
2900 D4
2902 B5
2911 A1
2912 B1
2913 A2
2914 B3
2916 B3
2918 C3
2920 B2
2921 B1
3107 D5
3902 C4
3903 C4
3904 B3
3905 A5
3907 B5
3908 B5
6900 D4
7900 D4
7901 A5
F900 A2
F901 A2
F902 A2
F903 B2
F904 B2
F905 B2
F906 B2
F907 B2
F909 C4
F910 D4
F911 D3
F912 D3
F913 A1
T900 A2
T901 A2
T902 B2
T903 A6

Layout: Mono Board (Topview)

1101	A17	2115	C18	2157	F16	2207	C16	2268	D14	2405	E3
1102	B13	2116	C14	2158	D17	2208	C18	2269	E20	2406	D3
1103	B12	2117	C17	2159	C17	2209	B18	2270	B19	2407	E2
1105	B11	2118	C17	2160	C17	2210	B19	2271	C19	2408	D3
1107	B15	2119	D17	2161	C17	2211	B19	2272	E20	2409	D3
1108	C13	2120	D17	2162	D17	2212	B17	2273	E19	2411	D3
1109	B12	2121	D17	2163	D17	2213	C16	2274	C19	2412	D3
1110	F17	2122	F18	2164	D17	2214	B17	2275	C19	2413	G7
1300	E6	2123	F18	2165	B14	2215	C16	2276	E20	2414	G8
1301	F6	2124	E18	2166	B14	2216	B14	2301	E6	2415	E3
1302	C7	2125	E18	2167	B14	2217	C16	2302	E6	2416	E3
1305	F6	2126	F16	2168	B14	2218	B13	2303	E6	2417	E3
1401	H6	2127	C17	2169	B17	2219	B13	2304	D6	2418	E2
1402	H8	2128	C17	2170	C16	2220	C16	2305	D6	2420	E3
1403	H7	2129	C17	2171	B16	2221	C16	2306	D5	2421	G9
1404	H8	2130	D17	2172	C16	2222	B15	2308	E7	2422	G9
1500	D9	2131	D17	2173	B16	2223	B15	2309	F5	2423	D2
1501	H10	2132	C18	2174	C16	2224	B16	2310	C7	2424	D2
1502	H11	2133	D17	2175	E17	2241	C11	2311	C6	2425	D2
1505	B22	2134	E18	2179	C15	2242	C11	2312	C6	2426	E2
1506	H12	2135	E18	2180	E14	2243	C11	2314	B3	2427	F3
1800	H18	2136	F18	2181	B13	2245	B11	2315	B7	2428	H3
1802	G15	2137	F18	2182	B14	2246	B11	2316	B6	2429	H3
1806	H13	2138	D15	2183	B13	2249	E14	2319	G7	2430	G2
1807	H13	2139	D14	2184	B13	2250	E12	2320	A7	2431	G2
1900	B10	2140	E15	2185	B13	2251	E12	2321	A6	2432	H3
1901	D9	2141	E15	2186	B12	2252	E13	2322	B5	2433	G3
2100	F17	2142	F15	2187	B11	2253	F13	2323	F7	2434	G2
2101	F13	2143	F16	2188	A19	2254	F13	2324	F7	2435	G3
2102	C17	2144	F16	2194	B15	2255	E13	2325	B7	2436	G3
2103	E19	2145	F16	2195	B15	2256	F15	2326	A5	2438	F3
2104	E19	2146	E17	2196	B15	2257	E15	2331	E1	2439	G3
2105	F17	2147	E18	2197	C15	2258	F13	2332	E1	2440	G5
2106	F18	2148	F17	2198	B14	2259	B20	2333	G1	2441	G8
2107	C17	2149	E17	2199	B13	2260	E19	2334	G1	2442	G3
2108	D17	2150	E13	2200	F17	2261	B20	2335	B1	2443	H3
2109	D17	2151	C15	2201	C17	2262	B19	2336	B1	2444	G3
2110	G21	2152	C15	2202	C17	2263	E19	2400	C3	2445	G2
2111	C18	2153	D15	2203	F17	2264	E19	2401	E2	2447	H3
2112	C18	2154	E15	2204	C17	2265	E19	2402	E3	2448	G5
2113	F16	2155	F16	2205	C16	2266	E19	2403	E2	2449	G5
2114	C14	2156	D17	2206	C16	2267	D13	2404	D2	2450	G2

2451	H2	2510	H10	2669	D20	2721	D22	3110	E18	3153	D14
2452	H2	2511	H11	2670	D20	2722	D22	3111	E18	3154	D14
2453	H2	2512	F10	2671	G21	2723	D22	3112	E17	3155	D14
2454	A3	2513	H13	2673	G21	2724	D22	3113	E18	3156	D14
2455	A2	2514	H12	2674	D19	2725	D22	3114	F18	3157	E14
2456	A2	2515	H12	2675	B9	2726	E8	3115	E18	3158	B14
2457	C2	2516	H12	2676	D20	2731	B20	3116	F18	3159	B14
2458	C1	2518	H12	2677	D20	2732	B20	3117	C9	3160	B13
2459	C3	2519	H12	2678	G21	2733	B20	3118	D17	3161	E13
2460	A3	2520	D10	2679	G21	2735	B20	3119	C17	3162	B13
2461	B2	2522	D10	2680	G21	2803	F18	3120	E18	3164	B19
2463	B3	2601	C20	2681	D20	2815	H18	3121	F17	3165	D13
2465	B3	2602	C20	2682	G22	2816	H18	3123	F16	3168	B13
2466	B3	2603	A21	2683	C9	2817	H18	3124	F16	3169	B13
2467	B5	2610	G21	2684	G21	2818	H18	3125	F16	3170	E12
2468	F6	2614	E22	2687	G21	2819	H17	3126	B18	3171	E12
2469	B3	2615	C20	2688	B21	2823	H17	3127	F16	3172	E12
2470	C3	2616	E22	2689	G21	2824	H19	3128	B18	3173	B17
2471	B3	2619	B20	2691	D19	2825	H19	3129	B18	3174	B17
2472	B2	2620	E21	2692	D19	2826	H19	3130	F16	3175	F18
2474	C3	2621	C19	2693	E22	2827	H19	3131	F16	3176	E18
2475	B5	2622	E21	2694	B19	2849	H13	3132	B17	3177	E19
2476	F7	2623	E21	2695	E21	2850	F19	3133	B17	3178	F18
2477	B2	2624	E21	2696	E21	2900	D9	3134	B17	3179	E18
2478	A2	2628	E11	2697	E21	2902	E11	3135	B17	3180	F18
2479	A2	2629	C20	2698	E21	2911	E11	3136	C16	3181	C11
2480	C2	2630	F21	2699	E21	2912	B9	3137	C16	3182	C11
2481	C4	2636	F21	2701	D21	2913	A10	3138	B16	3183	C11
2482	F4	2639	F21	2702	D21	2914	B9	3139	B16	3184	B11
2483	G8	2640	F21	2703	D21	2916	B9	3140	B15	3185	F17
2484	H3	2641	F21	2704	D21	2918	C9	3141	B15	3186	F16
2485	G6	2642	F21	2705	D21	2920	C10	3142	B15	3200	D19
2486	G6	2645	F22	2706	D21	2921	C9	3143	B13	3201	D19
2500	D10	2646	D10	2707	D22	3101	E19	3144	B15	3202	F16
2501	D10	2655	C20	2712	E8	3102	F18	3145	B13	3203	E13
2502	C22	2658	C20	2713	E7	3103	D17	3146	B14	3204	B21
2504	E10	2659	F21	2714	F21	3104	E19	3147	B14	3209	D13
2505	B21	2661	F21	2715	F21	3105	F17	3148	B13	3210	F15
2506	H12	2662	F21	2716	E8	3106	D17	3149	B13	3211	F16
2507	H11	2663	F21	2717	D12	3107	E17	3150	B14	3212	F16
2508	H11	2664	F21	2718	D11	3108	C17	3151	D14	3213	F15
2509	H11	2666	G21	2719	G21	3109	F18	3152	D14	3214	F15

3227	E19	3331	F7	3427	F6	3543	H20	3645	F21	3766	F9
3229	E19	3332	G6	3428	F7	3544	E10	3646	F21	3767	F9
3231	E19	3333	G6	3429	C2	3545	E10	3647	F21	3768	E8
3233	D13	3334	G8	3500	D10	3546	B21	3648	F21	3770	E9
3234	E20	3335	A7	3501	B21	3547	F11	3649	G21	3772	E8
3235	E19	3336	E1	3502	D10	3548	F11	3652	B9	3773	E8
3236	E19	3337	F7	3503	B21	3601	E22	3653	G21	3774	F8
3237	E20	3338	E6	3504	D10	3602	E21	3654	G21	3775	F8
3238	E19	3339	E6	3505	B21	3603	C20	3655	G21	3776	E11
3240	C13	3340	A6	3506	B21	3604	C20	3656	G21	3778	E12
3241	C13	3341	A7	3507	D10	3605	C20	3657	D20	3779	D11
3300	E1	3342	A7	3508	B21	3606	C20	3658	D19	3780	D11
3301	E1	3343	A6	3509	C22	3609	E21	3659	C9	3781	D11
3302	G1	3345	A7	3510	E10	3610	E21	3660	G21	3782	F12
3303	D1	3347	A7	3511	E10	3611	E21	3662	D19	3783	D11
3304	E1	3400	E1	3513	E10	3612	B20	3663	G21	3785	F11
3305	A6	3401	D3	3514	E10	3613	B20	3664	G21	3787	F12
3306	G1	3402	D1	3516	E10	3616	B19	3665	G21	3788	E12
3307	A7	3403	E3	3517	E11	3618	B20	3667	G21	3790	F11
3308	B1	3404	G6	3518	H11	3619	B20	3671	D19	3792	F11
3309	B1	3405	F7	3519	H11	3620	E22	3678	D19	3793	D11
3310	D6	3406	E1	3520	H11	3621	B19	3701	D21	3800	E20
3311	B1	3407	G6	3521	E10	3622	B19	3702	D21	3810	H11
3312	B1	3408	G9	3522	H12	3623	B19	3703	D21	3811	H18
3313	G2	3409	E1	3523	E10	3624	E21	3704	D21	3814	F20
3314	D6	3410	G1	3524	H10	3625	E21	3705	D21	3815	F20
3315	G1	3411	G3	3525	H11	3626	E21	3706	B19	3816	F20
3316	E6	3412	G1	3526	H11	3627	E22	3721	D22	3817	F19
3317	A6	3413	G3	3527	F10	3628	C19	3722	D22	3818	F20
3318	G1	3414	G4	3528	F10	3630	F21	3723	D22	3819	F19
3319	D6	3415	G8	3529	H11	3632	C19	3724	D22	3820	F19
3320	E6	3416	G1	3530	H12	3633	C19	3725	D22	3821	F19
3321	D6	3417	G5	3531	H13	3634	C19	3752	E8	3822	F20
3322	D6	3418	G5	3532	H13	3635	F21	3754	E7	3823	F20
3323	F6	3419	H1	3534	H12	3636	F21	3756	E8	3824	F19
3324	D5	3420	B1	3535	H12	3637	F21	3757	E7	3833	F18
3325	E6	3421	B3	3536	H12	3638	F21	3758	F8	3834	F18
3326	G7	3422	B1	3538	H20	3639	C20	3759	F7	3841	F17
3327	G9	3423	B3	3539	H20	3641	C19	3760	F21	3842	F17
3328	F7	3424	F6	3540	H20	3642	C20	3762	F21	3843	F18
3329	G8	3425	F6	3541	H20	3643	C20	3764	E9	3844	F18
3330	G5	3426	B1	3542	H20	3644	F21	3765	E9	3849	F19

3858	F19	4806	H13	5606	D19	7302	E6
3902	C9	4807	G13	5701	B20	7305	A6
3903	C9	4813	F18	6100	E12	7306	E6
3904	F12	4814	F18	6300	D6	7307	A7
3905	D11	4815	F19	6301	F7	7308	A6
3907	E11	4816	F19	6302	F7	7309	F7
3908	E11	4817	F18	6303	F7	7310	F7
4100	D18	4818	F18	6304	A7	7400	E2
4101	D18	4819	E18	6305	A7	7401	G2
4102	C17	4820	E18	6306	A6	7402	B2
4103	C17	5101	C17	6500	C22	7500	D10
4104	C17	5104	C12	6501	C22	7502	C22
4105	C16	5105	B12	6716	D11	7503	E10
4106	C16	5106	C18	6717	D11	7504	H20
4107	B15	5107	C18	6718	D11	7613	E22
4108	B16	5108	D18	6719	D11	7615	C20
4109	E15	5113	C17	6720	F12	7616	F22
4201	D14	5114	C17	6721	F12	7619	B20
4301	D6	5115	D17	6722	F11	7621	G22
4302	E5	5116	D17	6723	F12	7622	D19
4303	D5	5117	D15	6724	F12	7710	B20
4304	D1	5118	C14	6725	F12	7711	D22
4305	D1	5119	F17	6726	E12	7714	E8
4306	D1	5120	C14	6727	F11	7715	E7
4307	D1	5122	B14	6728	E11	7716	E9
4308	B1	5123	B18	6900	D9	7717	E9
4309	D1	5124	B18	7102	C12	7718	E8
4310	B1	5125	B18	7104	B18	7719	E8
4506	D10	5126	C16	7105	B18	7720	E12
4507	E10	5200	F13	7106	B17	7721	D11
4511	G20	5201	E20	7107	B17	7723	F12
4512	G20	5202	E19	7108	B18	7724	F12
4513	H20	5300	C6	7109	D16	7725	F11
4514	H20	5301	B6	7110	B15	7804	F19
4515	H19	5400	D4	7111	E13	7805	F19
4516	H10	5401	E4	7112	E12	7813	F17
4517	H10	5402	F4	7200	E13	7814	F18
4518	H19	5403	H4	7201	F14	7822	F19
4601	B19	5404	A4	7202	E19	7900	C9
4602	C19	5405	B4	7203	D14	7901	E12
4803	G18	5604	C19	7300	E6	9001	F6
4804	E18	5605	D20	7301	D6		

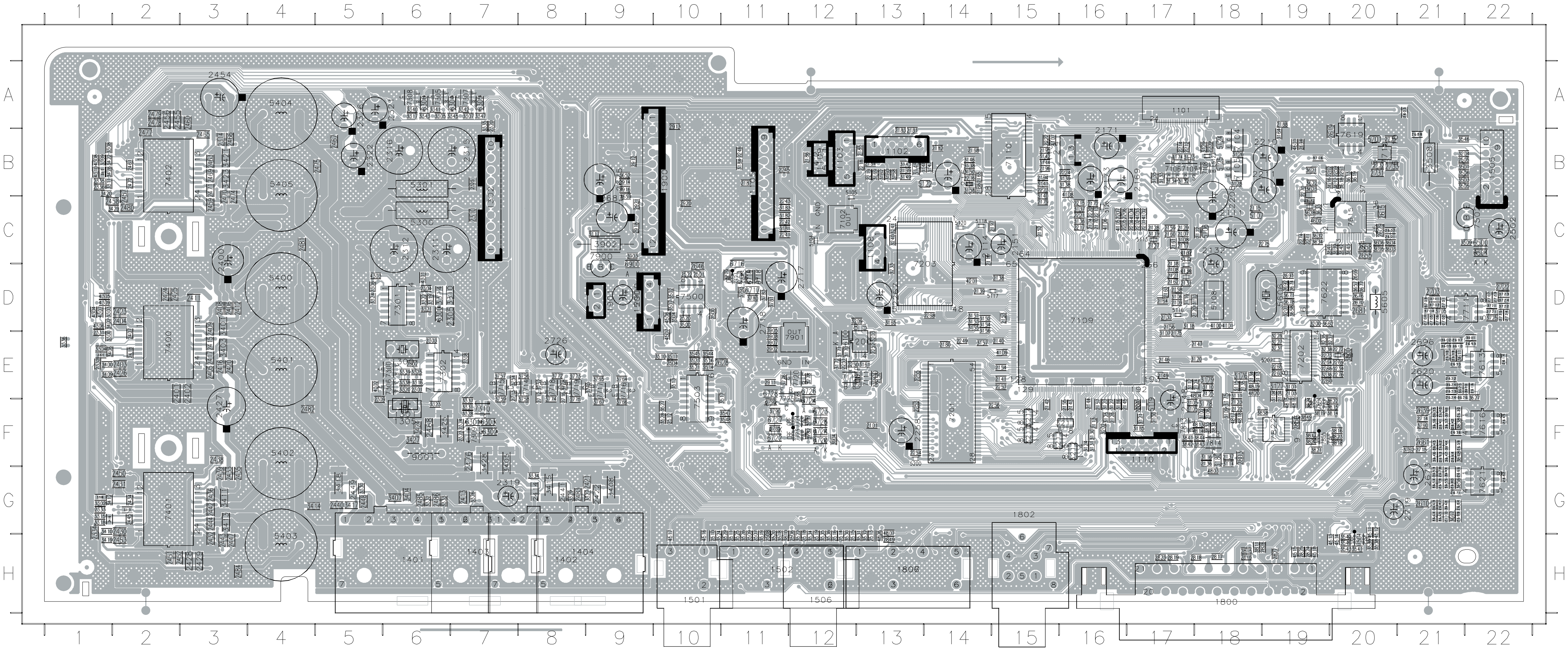

Mono_3500_98_top.pdf_051305

Layout: Mono Board (Bottom view)

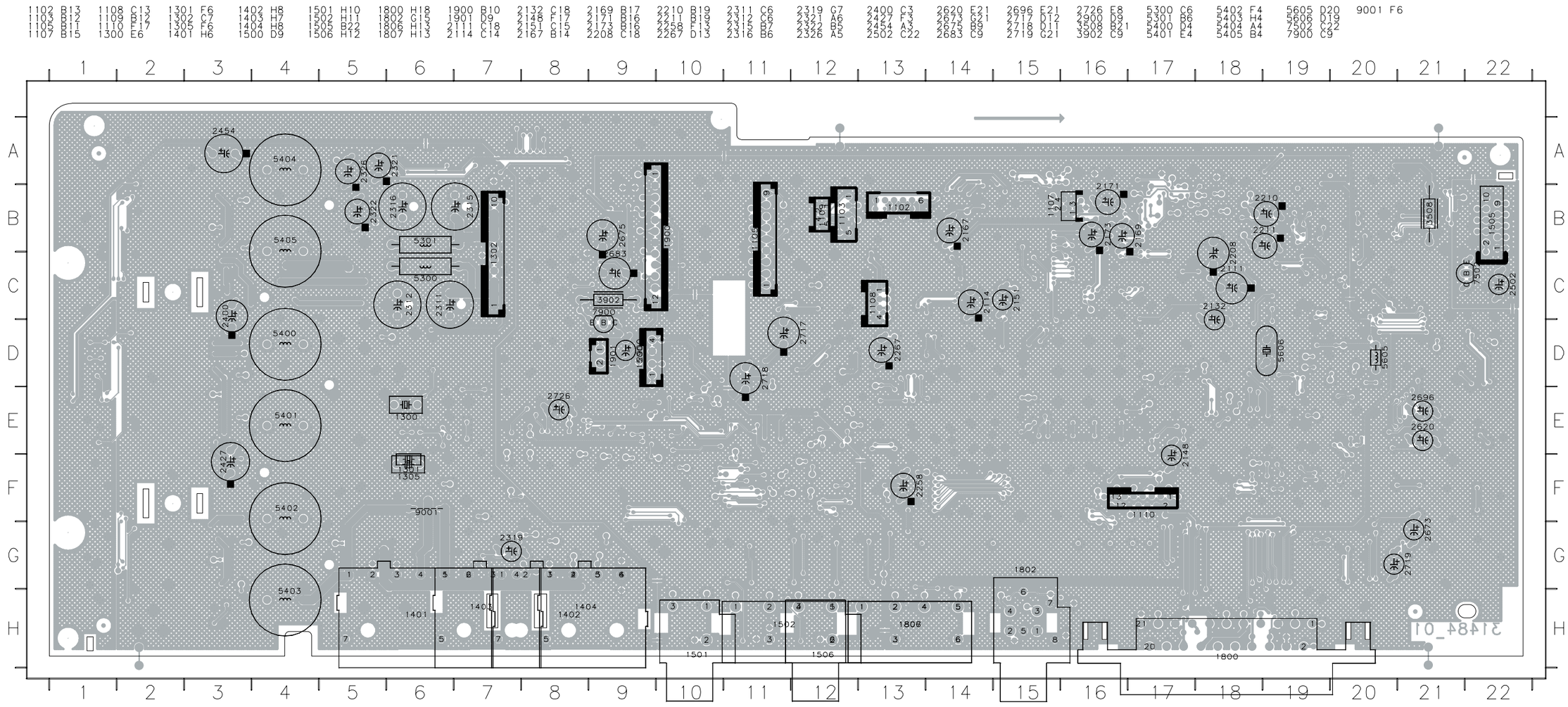

Mono_3500_98_bottom.pdf_051305

PSU Circuit Diagram (For information only)

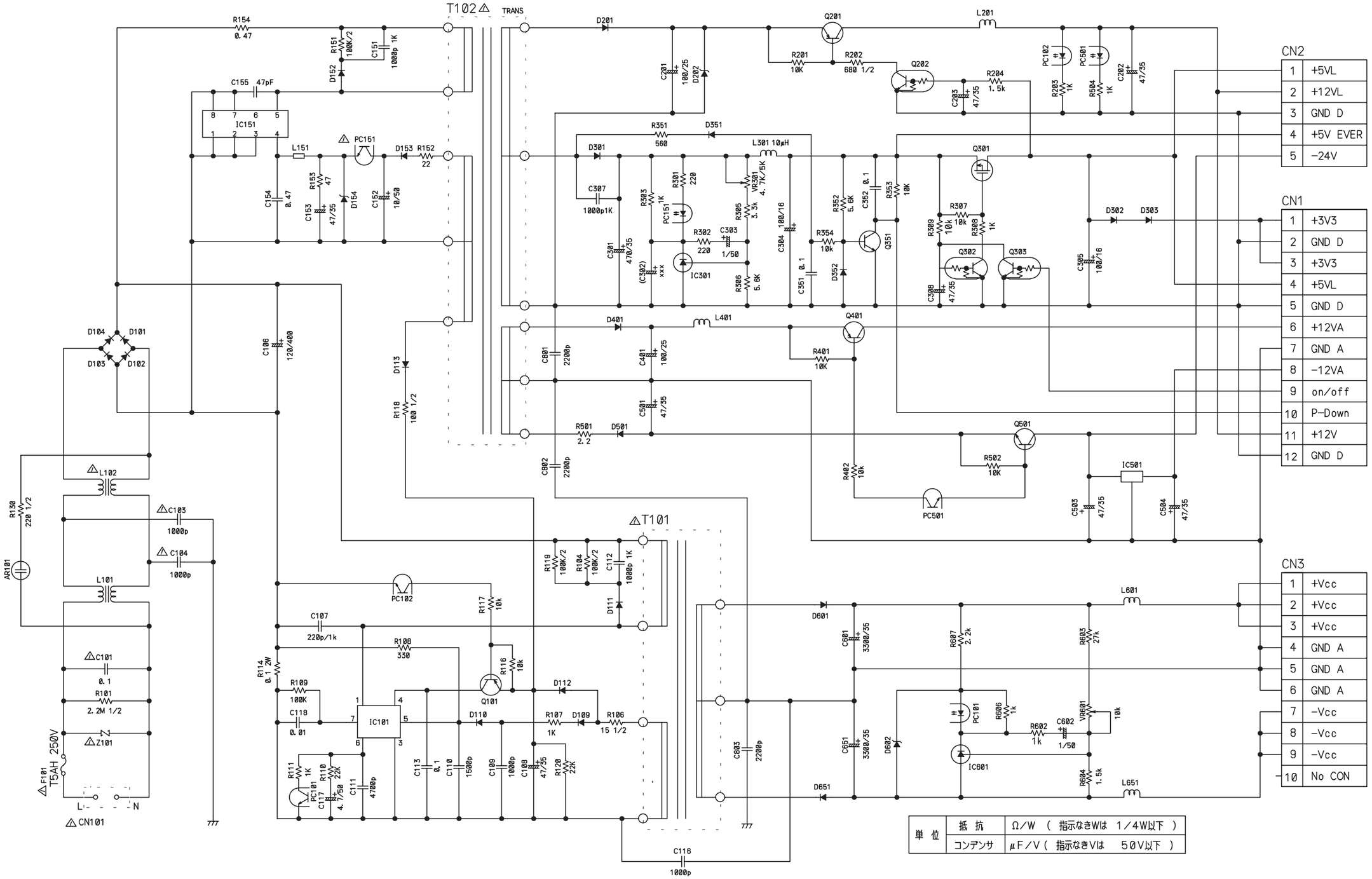

9. Exploded View of the Set

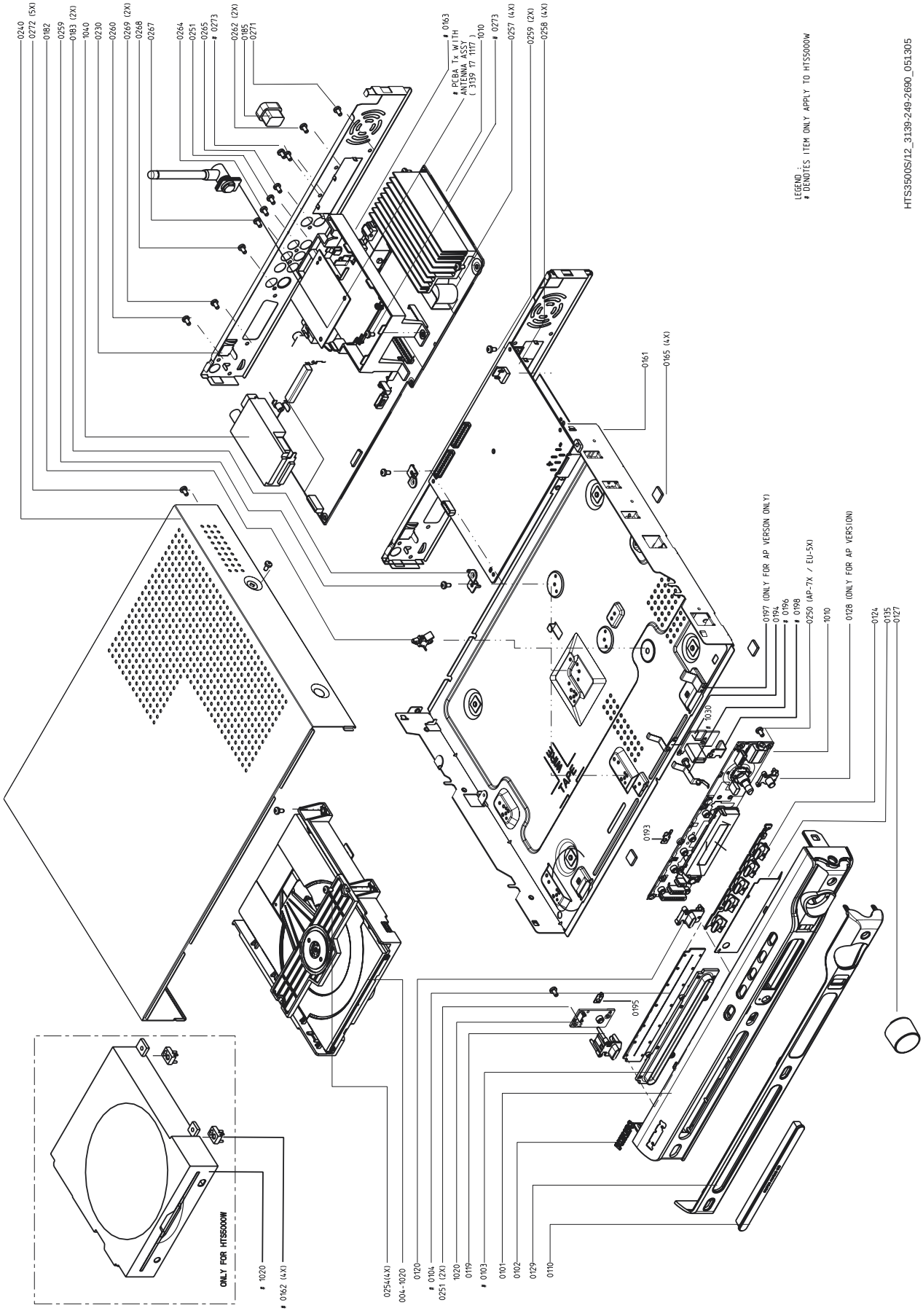

Figure 9-1

MISCELLANEOUS HTS3500S (05/12/51)

18	4822 466 11453	⚠	L7 MAIN SCORD BLOCK L7L
61	4822 321 11499	⚠	MAINSCORD 2.0M - EU
61	4822 321 11139	⚠	POWER CORD
119	3139 244 06041		BUTTON POWER/STANDBY PNT PRT
120	3139 244 06031		BUTTON OPEN/CLOSE PNT PRT
124	3139 244 06021		BUTTON SET SOURCE/CTRL PNT PRT
127	3139 244 06011		KNOB VOLUME CHROME
129	3139 244 06002		WINDOW DISPLAY EU PRT
165	3139 243 10080		CUSHION FOOT
182	3139 254 01571		SPACER PCB H11.4 KGLS-4S
183	3139 241 21261		BRACKET MONO
325	3139 247 11071		BOX SPK ASSY SW-3500HTS/12
326	3139 247 11061		BOX SPK ASSY CS-3500HTS/12
331	2422 076 00546		CBLE FM AERIAL 24AWG BK B
332	2422 549 45386		ANT AM LOOP LAN-011 B
332	2422 549 45813		ANT AM LOOP 039S20014 B
333	3139 258 70111		REMOTE CONTROL HTS3500S EU
336	4822 321 11499	⚠	MAINSCORD 2.0M - EU
342	2422 076 00468	⚠	CBLE SCART 1M1 SCART 21P BK B
1010	3139 118 58372		PCBA MONO HTS3000S EU
1020	3139 247 11121		LOADER ASSY ST KHM RX
1030	3139 117 11061	⚠	PCBA PSU 04-01 EU (MITSUMI)
1040	2422 542 00014		TUN A F ENG078VVQF EUR B
1050	3139 118 58312		PCBA FRONT HTS3000S EU
8001	3139 111 03781		FFC FOIL 10P/120/10P AD FOLD

MONO BOARD HTS3500S (05/12/51)
MISCELLANOUS

1101	2422 025 17529	CON BM H 24P F 0.50 FFC 0.3 R
1105	4822 265 41391	B9B-EH-A
1301	2422 540 98568	RES CER 700KHZ CSBLA* B
1302	4822 267 10557	B10B-EH-A
1401	2422 025 18516	SOC PUSH H 6P M PUBUGY Y
1402	2422 025 18517	SOC PUSH H 6P M WHGNRD Y
1501	2422 026 04754	SOC CINCH H 2P F 2L1 WHRD B
1506	2422 026 04754	SOC CINCH H 2P F 2L1 WHRD B
1800	2422 025 18315	SOC EURO H 21P F BK L-GRND Y
1802	2422 033 00546	SOC COMBI H 2P F CINCH/MDIN Y
1806	2422 026 05707	SOC CINCH H 4P F 2L2 Y

CAPACITORS

2314	2238 600 15614	CER2 0805 X7R 100V 220P PM10 R
2400	2020 021 91431	ELCAP YXA 100V S 22U PM20
2408	2238 600 15614	CER2 0805 X7R 100V 220P PM10 R
2411	2238 600 15614	CER2 0805 X7R 100V 220P PM10 R
2412	2238 600 15614	CER2 0805 X7R 100V 220P PM10 R
2416	2238 600 15614	CER2 0805 X7R 100V 220P PM10 R
2420	2238 600 15614	CER2 0805 X7R 100V 220P PM10 R
2427	2020 021 91431	ELCAP YXA 100V S 22U PM20
2435	2238 600 15614	CER2 0805 X7R 100V 220P PM10 R
2438	2238 600 15614	CER2 0805 X7R 100V 220P PM10 R
2439	2238 600 15614	CER2 0805 X7R 100V 220P PM10 R
2443	2238 600 15614	CER2 0805 X7R 100V 220P PM10 R
2447	2238 600 15614	CER2 0805 X7R 100V 220P PM10 R
2454	2020 021 91431	ELCAP YXA 100V S 22U PM20
2465	2238 600 15614	CER2 0805 X7R 100V 220P PM10 R
2466	2238 600 15614	CER2 0805 X7R 100V 220P PM10 R
2470	2238 600 15614	CER2 0805 X7R 100V 220P PM10 R
2474	2238 600 15614	CER2 0805 X7R 100V 220P PM10 R

RESISTORS

3210	4822 117 12662		10R X4 5%
3211	4822 117 12662		10R X4 5%
3212	4822 117 12662		10R X4 5%
3213	4822 117 12662		10R X4 5%
3214	4822 117 12662		10R X4 5%
3508	4822 052 10478	⚠	" 4R70 5% 0,33W"
3849	2422 549 43062		IND FXD SM EMI 100MHZ 600R R

COILS & FILTERS

5101	2422 549 43062	IND FXD SM EMI 100MHZ 600R R
5104	2422 549 45618	IND FXD 0603 EMI 100MHZ 60R R
5105	2422 549 45618	IND FXD 0603 EMI 100MHZ 60R R
5106	4822 157 71206	BLM21A601SPT
5107	4822 157 71206	BLM21A601SPT
5113	2422 549 43062	IND FXD SM EMI 100MHZ 600R R
5114	2422 549 43062	IND FXD SM EMI 100MHZ 600R R
5115	2422 549 43062	IND FXD SM EMI 100MHZ 600R R
5116	2422 549 43062	IND FXD SM EMI 100MHZ 600R R
5117	2422 549 43062	IND FXD SM EMI 100MHZ 600R R
5118	2422 549 43062	IND FXD SM EMI 100MHZ 600R R
5119	4822 157 71206	BLM21A601SPT
5120	2422 549 45618	IND FXD 0603 EMI 100MHZ 60R R
5122	4822 157 71206	BLM21A601SPT
5123	2422 549 43062	IND FXD SM EMI 100MHZ 600R R
5124	3198 018 31090	FXDIND SM 0805 10U PM10 COL R
5125	3198 018 31090	FXDIND SM 0805 10U PM10 COL R
5126	2422 549 43062	IND FXD SM EMI 100MHZ 600R R
5200	2422 549 43062	IND FXD SM EMI 100MHZ 600R R
5201	2422 549 43062	IND FXD SM EMI 100MHZ 600R R
5202	2422 549 43062	IND FXD SM EMI 100MHZ 600R R
5300	4822 157 11411	100MHZ
5301	4822 157 11411	100MHZ
5400	2422 536 00822	IND FXD 16RHBP S 22U P10M20 B
5401	2422 536 00822	IND FXD 16RHBP S 22U P10M20 B
5402	2422 536 00822	IND FXD 16RHBP S 22U P10M20 B
5403	2422 536 00822	IND FXD 16RHBP S 22U P10M20 B
5404	2422 536 00822	IND FXD 16RHBP S 22U P10M20 B
5405	2422 536 00822	IND FXD 16RHBP S 22U P10M20 B
5604	2422 549 43062	IND FXD SM EMI 100MHZ 600R R
5605	4822 157 62552	"2,2UH"

DIODES

6100	4822 130 11397	BAS316
6300	3198 020 55680	DIO REG SM BZX384-C5V6 COL R
6301	4822 130 11397	BAS316
6302	4822 130 11397	BAS316
6303	4822 130 11397	BAS316
6305	4822 130 11397	BAS316
6306	4822 130 11397	BAS316
6500	4822 130 11397	BAS316
6501	9322 159 70685	DIO REG SM MM3Z9V1 (ONSE) R
6716	4822 130 11397	BAS316
6717	4822 130 11397	BAS316
6718	4822 130 11397	BAS316
6719	4822 130 11397	BAS316
6720	4822 130 11397	BAS316
6721	4822 130 11397	BAS316
6722	4822 130 11397	BAS316
6723	4822 130 11397	BAS316
6724	4822 130 11397	BAS316
6725	4822 130 11397	BAS316

DIODES

6726	4822 130 11397	BAS316
6727	4822 130 11397	BAS316
6728	4822 130 11397	BAS316

TRANSISTORS & INTEGRATED CIRCUITS

7102	4822 209 17398	LD1117DT33
7104	4822 130 11565	2SB1132
7105	4822 130 11565	2SB1132
7106	9340 547 13215	FET SIG SM BSH103 (PHSE) R
7107	9340 547 13215	FET SIG SM BSH103 (PHSE) R
7108	9340 219 30115	BC817-25W
7109	9322 219 32671	IC SM MT1389EE/B-L (MEDI) Y
7110	9322 201 94668	IC SM MM1646XH (MITM) R
7112	5322 130 60159	BC846B
7201	9322 166 67668	IC SM MT48LC4M16A2TG-7E(MRN0)R
7202	9322 185 10668	IC SM CS8415A-CZ (CILO) R
7203	9322 194 74668	IC SM M29W160ET70N6 (ST00) R
7300	5322 130 60159	BC846B
7301	5322 209 14477	HEF4013BT
7302	5322 209 11517	PC74HCU04T
7305	5322 130 60159	BC846B
7306	4822 130 60373	BC856B
7307	5322 130 60159	BC846B
7308	5322 130 60159	BC846B
7309	5322 130 60159	BC846B
7310	4822 130 60373	BC856B
7400	9352 753 45518	IC SM TDA8922BTH/N2 (PHSE) R
7401	9352 753 44518	IC SM TDA8920BTH/N2 (PHSE) R
7402	9352 753 45518	IC SM TDA8922BTH/N2 (PHSE) R
7502	4822 130 40959	BC547B
7503	5322 209 11102	HEF4052BT
7504	9340 425 20115	TRA SIG SM BC847BS (PHSE) R
7613	4822 209 30095	LM833D
7615	9322 215 93668	IC SM CS42406-CQZ (CILO) R
7616	4822 209 30095	LM833D
7619	4822 209 33411	MC78L05ACD
7621	4822 209 30095	LM833D
7622	9352 686 05118	IC SM SAA6581T (PHSE) R
7720	5322 130 60159	BC846B
7721	9340 425 10115	TRA SIG SM BC857BS (PHSE) R
7723	9340 425 30115	TRA SIG SM BC847BPN (PHSE) R
7724	9340 425 30115	TRA SIG SM BC847BPN (PHSE) R
7725	4822 130 60373	BC856B
7804	9340 425 30115	TRA SIG SM BC847BPN (PHSE) R
7805	9340 425 20115	TRA SIG SM BC847BS (PHSE) R
7813	4822 130 60373	BC856B
7814	4822 130 60373	BC856B
7822	9322 220 63668	IC SM TS5V330PW (TI00) R
7901	9322 144 97668	IC SM LD1117DT (ST00) R
7201	9322 205 53668	IC SM A2V64S40DTP-7 (POSE) R
7201	9322 209 02668	IC SM IS42S16400B-7T (ISSI) R

FRONT BOARD HTS3500S (05/12/51)

MISCELLANOUS

1701	3139 111 04131	FTD HUV-08SS57T (LX-3900SA)
1705	2422 129 16836	ROT ENCODER 12P EVEGC2F2012B B
1710	4822 276 13775	SWITCH
1711	4822 276 13775	SWITCH
1712	4822 276 13775	SWITCH
1713	4822 276 13775	SWITCH
1714	4822 276 13775	SWITCH
1716	4822 276 13775	SWITCH
1717	2422 540 98011	RES CER 455KHZ CSB*E B

DIODES

6700	9322 179 76676	LED VS LTL-816EELC (LITO) A
6701	9340 548 54115	DIO REG SM PDZ6.2B (PHSE) R
6704	4822 130 11397	BAS316
6705	4822 130 11397	BAS316
6706	4822 130 11397	BAS316
6707	4822 130 11397	BAS316
6708	4822 130 11397	BAS316
6709	4822 130 11397	BAS316
6710	4822 130 11397	BAS316
6711	4822 130 11397	BAS316
6712	4822 130 11397	BAS316
6713	4822 130 11397	BAS316
6714	4822 130 11397	BAS316
6715	4822 130 11397	BAS316
6716	4822 130 11397	BAS316
6717	4822 130 11397	BAS316
6718	4822 130 11397	BAS316
6719	4822 130 11397	BAS316
6720	4822 130 11397	BAS316

TRANSISTORS & INTEGRATED CIRCUITS

7701	9322 185 95667	IR RECEIVER TSOP4836 (VISH)L
7704	5322 130 60159	BC846B
7705	4822 130 42804	BC817-25
7706	4822 130 60373	BC856B
7707	5322 130 60159	BC846B
7708	9322 217 04671	IC SM V63111LF (VAIT) Y

MISCELLANEOUS HTS3500S (98/75)

18	4822 466 11453	⚠	L7 MAIN SCORD BLOCK L7L
61	4822 321 11499	⚠	MAINSCORD 2.0M - EU
61	4822 321 11139	⚠	POWER CORD
119	3139 244 06041		BUTTON POWER/STANDBY PNT PRT
120	3139 244 06031		BUTTON OPEN/CLOSE PNT PRT
124	3139 244 06021		BUTTON SET SOURCE/CTRL PNT PRT
127	3139 244 06011		KNOB VOLUME CHROME
128	3139 244 05991		BUTTON MIC LEVEL PNT
165	3139 243 10080		CUSHION FOOT
182	3139 254 01571		SPACER PCB H11.4 KGLS-4S
183	3139 241 21261		BRACKET MONO
325	3139 247 11071		BOX SPK ASSY SW-3500HTS/12
326	3139 247 11061		BOX SPK ASSY CS-3500HTS/12
331	2422 076 00546		CBLE FM AERIAL 24AWG BK B
332	2422 549 45386		ANT AM LOOP LAN-011 B
332	2422 549 45813		ANT AM LOOP 039S20014 B
333	3139 258 70101		REMOTE CONTROL HTS3500S AP
336	4822 321 11499	⚠	MAINSCORD 2.0M - EU (/98)
336	2422 070 98233	▲	MAINSCORD 2.0M - AUST (/75)
1010	3139 118 58382		PCBA MONO HTS3000S ROW
1020	3139 247 11121		LOADER ASSY ST KHM RX
1030	3139 117 11051	⚠	PCBA PSU 04-01 WR (MITSUMI)
1040	2422 542 00015		TUN A F ENG068VVQF USA B
1050	3139 118 58302		PCBA FRONT HTS3000S ROW
8001	3139 111 03781		FFC FOIL 10P/120/10P AD FOLD

MONOBOARD HTS3500S (98/75)
MISCELLANOUS

1101	2422 025 17529	CON BM H 24P F 0.50 FFC 0.3 R
1301	2422 540 98568	RES CER 700KHZ CSBLA* B
1401	2422 025 18516	SOC PUSH H 6P M PUBUGY Y
1402	2422 025 18517	SOC PUSH H 6P M WHGNRD Y
1501	2422 026 04754	SOC CINCH H 2P F 2L1 WHRD B
1502	2422 026 05462	SOC CINCH H 4P F 2L2 WHRD Y
1505	4822 267 10729	10FE-BT-VK-N
1802	2422 033 00546	SOC COMBI H 2P F CINCH/MDIN Y
1806	2422 026 05707	SOC CINCH H 4P F 2L2 Y

CAPACITORS

2314	2238 600 15614	CER2 0805 X7R 100V 220P PM10 R
2400	2020 021 91431	ELCAP YXA 100V S 22U PM20
2408	2238 600 15614	CER2 0805 X7R 100V 220P PM10 R
2411	2238 600 15614	CER2 0805 X7R 100V 220P PM10 R
2412	2238 600 15614	CER2 0805 X7R 100V 220P PM10 R
2416	2238 600 15614	CER2 0805 X7R 100V 220P PM10 R
2420	2238 600 15614	CER2 0805 X7R 100V 220P PM10 R
2427	2020 021 91431	ELCAP YXA 100V S 22U PM20
2435	2238 600 15614	CER2 0805 X7R 100V 220P PM10 R
2438	2238 600 15614	CER2 0805 X7R 100V 220P PM10 R
2439	2238 600 15614	CER2 0805 X7R 100V 220P PM10 R
2443	2238 600 15614	CER2 0805 X7R 100V 220P PM10 R
2447	2238 600 15614	CER2 0805 X7R 100V 220P PM10 R
2454	2020 021 91431	ELCAP YXA 100V S 22U PM20
2465	2238 600 15614	CER2 0805 X7R 100V 220P PM10 R
2466	2238 600 15614	CER2 0805 X7R 100V 220P PM10 R
2470	2238 600 15614	CER2 0805 X7R 100V 220P PM10 R
2474	2238 600 15614	CER2 0805 X7R 100V 220P PM10 R

RESISTORS

3210	4822 117 12662		10R X4 5%
3211	4822 117 12662		10R X4 5%
3212	4822 117 12662		10R X4 5%
3213	4822 117 12662		10R X4 5%
3214	4822 117 12662		10R X4 5%
3508	4822 052 10478	⚠	ì 4R70 5% 0,33Wî
3849	2422 549 43062		IND FXD SM EMI 100MHZ 600R R

COILS & FILTERS

5101	2422 549 43062	IND FXD SM EMI 100MHZ 600R R
5104	2422 549 45618	IND FXD 0603 EMI 100MHZ 60R R
5105	2422 549 45618	IND FXD 0603 EMI 100MHZ 60R R
5106	4822 157 71206	BLM21A601SPT
5107	4822 157 71206	BLM21A601SPT
5108	2422 543 01393	RES XTL SM 27MHZ 10P CX8045 R
5113	2422 549 43062	IND FXD SM EMI 100MHZ 600R R
5114	2422 549 43062	IND FXD SM EMI 100MHZ 600R R
5115	2422 549 43062	IND FXD SM EMI 100MHZ 600R R
5116	2422 549 43062	IND FXD SM EMI 100MHZ 600R R
5117	2422 549 43062	IND FXD SM EMI 100MHZ 600R R
5118	2422 549 43062	IND FXD SM EMI 100MHZ 600R R
5119	4822 157 71206	BLM21A601SPT
5120	2422 549 45618	IND FXD 0603 EMI 100MHZ 60R R
5122	4822 157 71206	BLM21A601SPT
5123	2422 549 43062	IND FXD SM EMI 100MHZ 600R R
5124	3198 018 31090	FXDIND SM 0805 10U PM10 COL R
5125	3198 018 31090	FXDIND SM 0805 10U PM10 COL R
5126	2422 549 43062	IND FXD SM EMI 100MHZ 600R R
5200	2422 549 43062	IND FXD SM EMI 100MHZ 600R R
5201	2422 549 43062	IND FXD SM EMI 100MHZ 600R R
5202	2422 549 43062	IND FXD SM EMI 100MHZ 600R R
5300	4822 157 11411	100MHZ
5301	4822 157 11411	100MHZ
5400	2422 536 00822	IND FXD 16RHBP S 22U P10M20 B
5401	2422 536 00822	IND FXD 16RHBP S 22U P10M20 B
5402	2422 536 00822	IND FXD 16RHBP S 22U P10M20 B
5403	2422 536 00822	IND FXD 16RHBP S 22U P10M20 B
5404	2422 536 00822	IND FXD 16RHBP S 22U P10M20 B
5405	2422 536 00822	IND FXD 16RHBP S 22U P10M20 B
5604	2422 549 43062	IND FXD SM EMI 100MHZ 600R R

DIODES

6100	4822 130 11397	BAS316
6300	3198 020 55680	DIO REG SM BZX384-C5V6 COL R
6301	4822 130 11397	BAS316
6302	4822 130 11397	BAS316
6303	4822 130 11397	BAS316
6305	4822 130 11397	BAS316
6306	4822 130 11397	BAS316
6500	4822 130 11397	BAS316
6501	9322 159 70685	DIO REG SM MM3Z9V1 (ONSE) R
6716	4822 130 11397	BAS316
6717	4822 130 11397	BAS316
6718	4822 130 11397	BAS316
6719	4822 130 11397	BAS316
6720	4822 130 11397	BAS316
6721	4822 130 11397	BAS316
6722	4822 130 11397	BAS316
6723	4822 130 11397	BAS316
6724	4822 130 11397	BAS316
6725	4822 130 11397	BAS316

DIODES

6726	4822 130 11397	BAS316
6727	4822 130 11397	BAS316
6728	4822 130 11397	BAS316

TRANSISTORS & INTEGRATED CIRCUITS

7102	4822 209 17398	LD1117DT33
7104	4822 130 11565	2SB1132
7105	4822 130 11565	2SB1132
7106	9340 547 13215	FET SIG SM BSH103 (PHSE) R
7107	9340 547 13215	FET SIG SM BSH103 (PHSE) R
7108	9340 219 30115	BC817-25W
7109	9322 219 32671	IC SM MT1389EE/B-L (MEDI) Y
7110	9322 201 94668	IC SM MM1646XH (MITM) R
7112	5322 130 60159	BC846B
7201	9322 166 67668	IC SM MT48LC4M16A2TG-7E(MRN0)R
7202	9322 185 10668	IC SM CS8415A-CZ (CILO) R
7203	9322 194 74668	IC SM M29W160ET70N6 (ST00) R
7300	5322 130 60159	BC846B
7301	5322 209 14477	HEF4013BT
7302	5322 209 11517	PC74HCU04T
7305	5322 130 60159	BC846B
7306	4822 130 60373	BC856B
7307	5322 130 60159	BC846B
7308	5322 130 60159	BC846B
7309	5322 130 60159	BC846B
7310	4822 130 60373	BC856B
7400	9352 753 45518	IC SM TDA8922BTH/N2 (PHSE) R
7401	9352 753 44518	IC SM TDA8920BTH/N2 (PHSE) R
7402	9352 753 45518	IC SM TDA8922BTH/N2 (PHSE) R
7500	4822 209 30095	LM833D
7502	4822 130 40959	BC547B
7503	5322 209 11102	HEF4052BT
7504	9340 425 20115	TRA SIG SM BC847BS (PHSE) R
7613	4822 209 30095	LM833D
7615	9322 215 93668	IC SM CS42406-CQZ (CILO) R
7616	4822 209 30095	LM833D
7619	4822 209 33411	MC78L05ACD
7621	4822 209 30095	LM833D
7720	5322 130 60159	BC846B
7721	9340 425 10115	TRA SIG SM BC857BS (PHSE) R
7723	9340 425 30115	TRA SIG SM BC847BPN (PHSE) R
7724	9340 425 30115	TRA SIG SM BC847BPN (PHSE) R
7725	4822 130 60373	BC856B
7822	9322 220 63668	IC SM TS5V330PW (TI00) R
7901	9322 144 97668	IC SM LD1117DT (ST00) R
7201	9322 205 53668	IC SM A2V64S40DTP-7 (POSE) R
7201	9322 209 02668	IC SM IS42S16400B-7T (ISSI) R

FRONT BOARD HTS3500S (98/75)

MISCELLANOUS

1701	3139 111 04131	FTD HUV-08SS57T (LX-3900SA)
1705	2422 129 16836	ROT ENCODER 12P EVEGC2F2012B B
1709	2422 026 05691	SOC PHONE H 1P F 3.5 MSJ Y
1710	4822 276 13775	SWITCH
1711	4822 276 13775	SWITCH
1712	4822 276 13775	SWITCH
1713	4822 276 13775	SWITCH
1714	4822 276 13775	SWITCH
1715	4822 276 13775	SWITCH
1716	4822 276 13775	SWITCH
1717	2422 540 98011	RES CER 455KHZ CSB*E B
1901	4822 276 13775	SWITCH

CAPACITORS

2901	4822 126 13883	220PF 5% 50V
2902	4822 126 13883	220PF 5% 50V

COILS & FILTERS

5700	4822 126 14491	2.2UF 10V 0805

DIODES

6700	9322 179 76676	LED VS LTL-816EELC (LITO) A
6701	9340 548 54115	DIO REG SM PDZ6.2B (PHSE) R
6703	4822 130 11397	BAS316
6704	4822 130 11397	BAS316
6705	4822 130 11397	BAS316
6706	4822 130 11397	BAS316
6707	4822 130 11397	BAS316
6708	4822 130 11397	BAS316
6709	4822 130 11397	BAS316
6710	4822 130 11397	BAS316
6711	4822 130 11397	BAS316
6712	4822 130 11397	BAS316
6713	4822 130 11397	BAS316
6714	4822 130 11397	BAS316
6715	4822 130 11397	BAS316
6716	4822 130 11397	BAS316
6717	4822 130 11397	BAS316
6718	4822 130 11397	BAS316
6719	4822 130 11397	BAS316
6720	4822 130 11397	BAS316
7701	9322 185 95667	IR RECEIVER TSOP4836 (VISH)L
7702	4822 209 30095	LM833D
7703	5322 130 60159	BC846B
7704	5322 130 60159	BC846B
7705	4822 130 42804	BC817-25
7706	4822 130 60373	BC856B
7707	5322 130 60159	BC846B
7708	9322 217 04671	IC SM V63111LF (VAIT) Y

11 REVISION LIST

11.1 Manual 3139 785 31191

1.Additional of HTS3500S/75

2.Replace of schematic diagram (point 4) in page 22 of document.

3.Additional of HTS3500S/75 for Reprogramming of DVD version Matrix in page 11 of documents.

4.Revise of spare parts list for HTS3500S/75