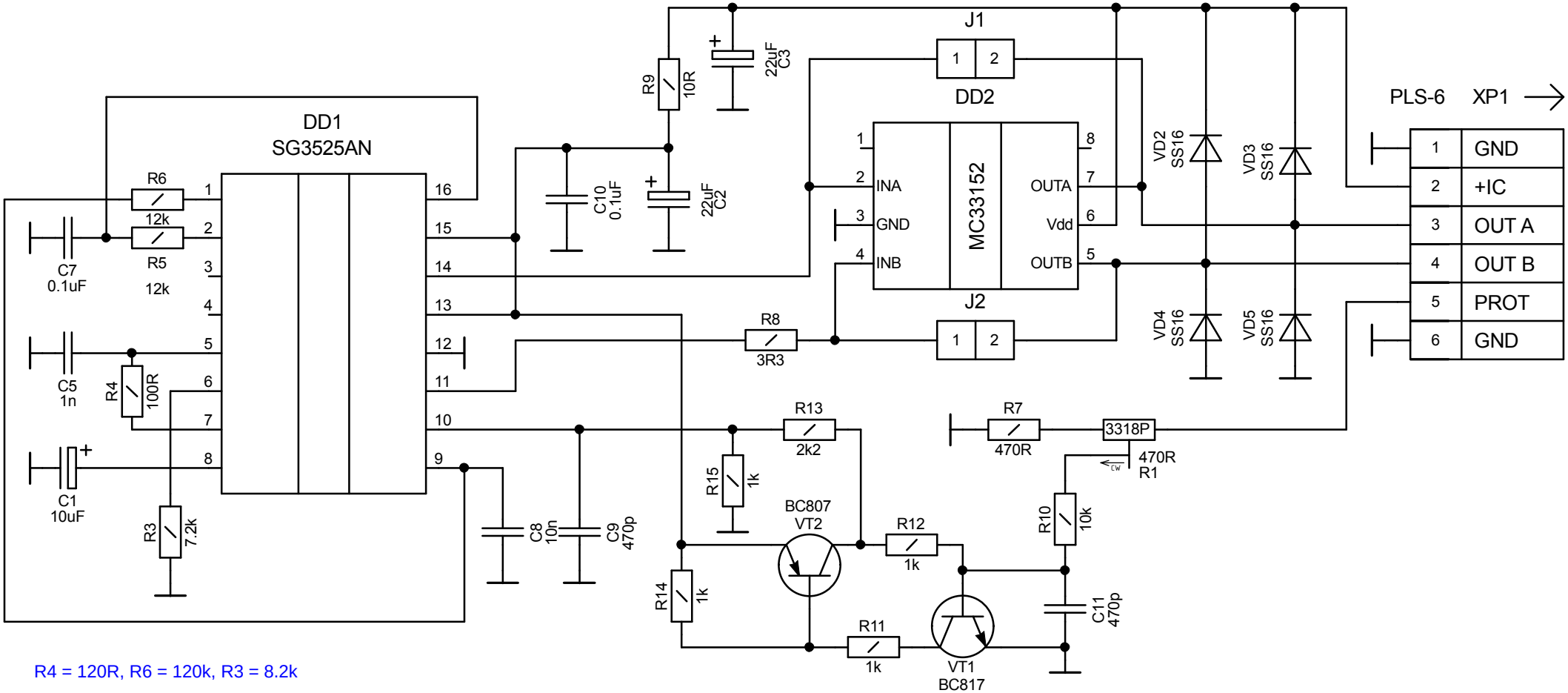

R4 = 120R, R6 = 120k, R3 = 8.2k