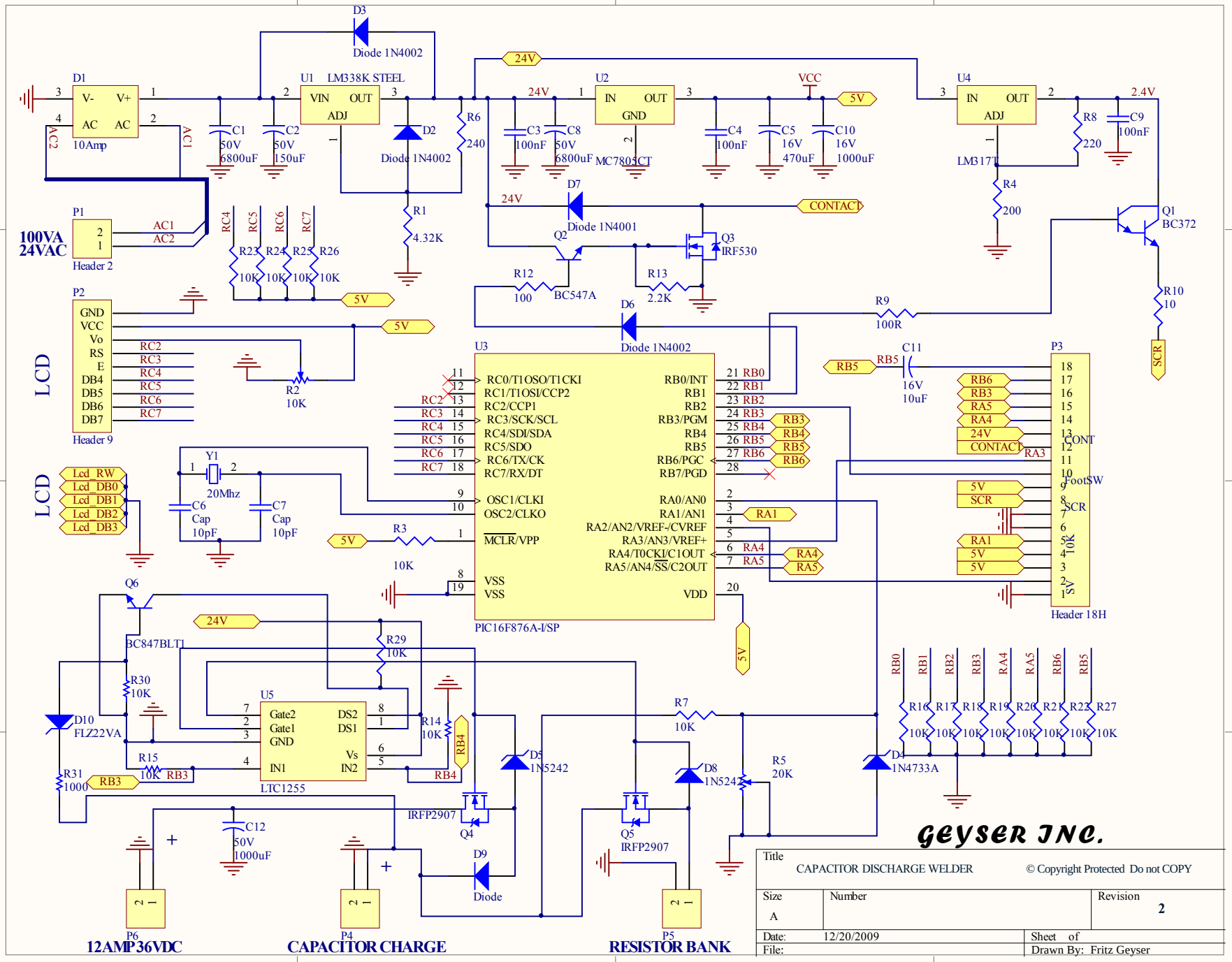
D1
V- V+
AC AC
10Amp
AC2
AC1
D3
Diode 1N4002
U1 LM338K STEEL
VIN OUT
ADJ
D2
Diode 1N4002
R6
240
R1
4.32K
C1
50V
6800uF
C2
50V
150uF
24V
U2
IN OUT
GND
MC7805CT
C3
100nF
C8
50V
6800uF
C4
100nF
C5
16V
470uF
C10
16V
1000uF
VCC
5V
U4
IN OUT
ADJ
LM317T
R8
220
C9
100nF
2.4V
R4
200
Q1
BC372
R10
10
SCR
D7
Diode 1N4001
CONTACT
Q2
BC547A
Q3
IRF530
R12
100
R13
2.2K
D6
Diode 1N4002
R9
100R
P1
100VA
24VAC
Header 2
RC4 RC5 RC6 RC7
R23 R24 R25 R26
10K 10K 10K 10K
P2
GND
VCC
Vo
RS
E
DB4
DB5
DB6
DB7
Header 9
LCD
RC2
RC3
RC4
RC5
RC6
RC7
R2
10K
U3
RC0/T1OSO/T1CKI
RC1/T1OSI/CCP2
RC2/CCP1
RC3/SCK/SCL
RC4/SDI/SDA
RC5/SDO
RC6/TX/CK
RC7/RX/DT
OSC1/CLKI
OSC2/CLKO
MCLR/VPP
VSS
VSS
RB0/INT
RB1
RB2
RB3/PGM
RB4
RB5
RB6/PGC
RB7/PGD
RA0/AN0
RA1/AN1
RA2/AN2/VREF-/CVREF
RA3/AN3/VREF+
RA4/T0CKI/C1OUT
RA5/AN4/SS/C2OUT
VDD
PIC16F876A-I/SP
RB0
RB1
RB2
RB3
RB4
RB5
RB6
RA1
RA4
RA5
RB5
C11
16V
10uF
P3
RB6
RB3
RA5
RA4
24V
CONTACT
RA3
CONT
FootSW
5V
SCR
SCR
RA1
5V
5V
10K
5V
Header 18H
Lcd_RW
Lcd_DB0
Lcd_DB1
Lcd_DB2
Lcd_DB3
Y1
20Mhz
C6
Cap
10pF
C7
Cap
10pF
R3
10K
Q6
BC847BLT1
R29
10K
R30
10K
D10
FLZ22VA
R31
1000
R15
10K
RB3
U5
Gate2
Gate1
GND
IN1
DS2
DS1
Vs
IN2
LTC1255
R14
10K
RB4
D5
1N5242
IRFP2907
Q4
C12
50V
1000uF
D9
Diode
R7
10K
D8
1N5242
R5
20K
Q5
IRFP2907
D4
1N4733A
RB0 RB1 RB2 RB3 RA4 RA5 RB6 RB5
R16 R17 R18 R19 R20 R21 R22 R27
10K 10K 10K 10K 10K 10K 10K 10K
P6
12AMP36VDC
P4
CAPACITOR CHARGE
P5
RESISTOR BANK
GEYSER INC.
Title
CAPACITOR DISCHARGE WELDER
© Copyright Protected Do not COPY
Size
A
Number
Revision
2
Date: 12/20/2009
Sheet of
File:
Drawn By: Fritz Geyser