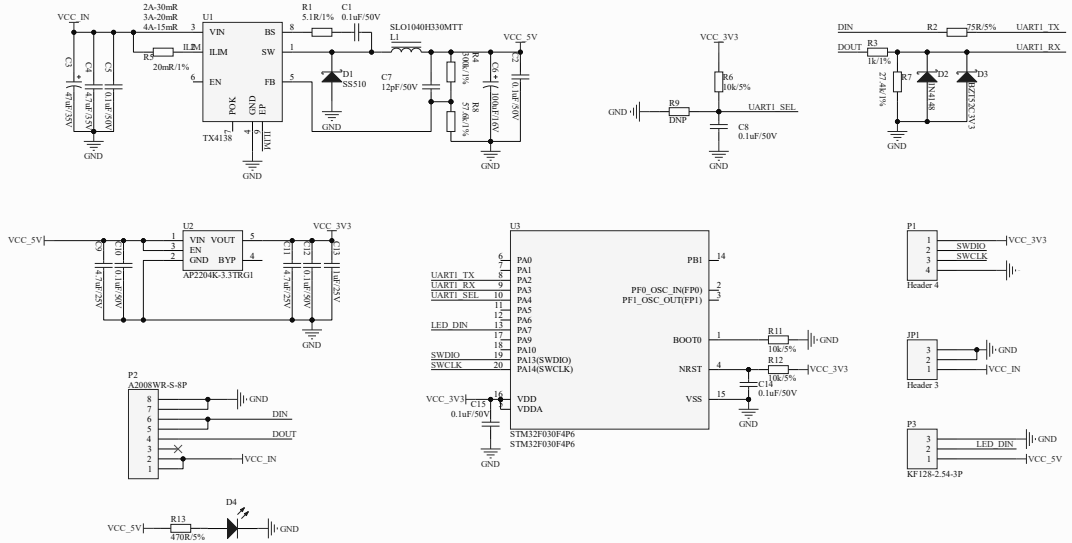

Title		
Size A2	Number	Revision
Date: 7/07/2021	Sheet of	
File: D:\LED_Ctrl_V1.2\LED_Ctrl.SchDoc	Drawn By:	