ORDER NO. KM41006113CE

Service Manual

Telephone Equipment

AOH and Caller ID Compatible

Model No. KX-TG2511CAM
KX-TG2511CAS
KX-TG2511CAT
KX-TG2512CAM
KX-TG2512CAT
KX-TGA250RUM
KX-TGA250RUS
KX-TGA250RUT

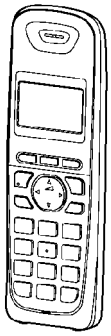

KX-TGA250RUM/RUS/RUT
(Handset)

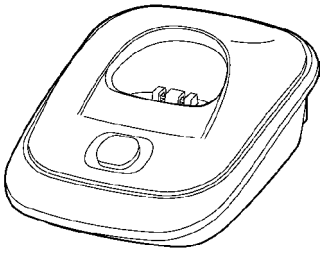

KX-TG2511CAM/CAS/CAT
(Base Unit)

(Charger Unit)

Digital Cordless Phone

M: Metallic Grey Version
S: Silver Version
T: Titanium Black Version
(for Kazakhstan)
(for Tajikistan)
(for Uzbekistan)
(for Turkmenistan)
(for Kyrgyzstan)

Configuration for each model

Model No	Base Unit	Handset	Charger Unit
KX-TG2511	1 (TG2511)	1 (TGA250)	
KX-TG2512	1 (TG2511)	2 (TGA250)	1

Panasonic®

© Panasonic System Networks Co., Ltd. 2010
Unauthorized copying and distribution is a violation of law.

⚠ WARNING

This service information is designed for experienced repair technicians only and is not designed for use by the general public. It does not contain warnings or cautions to advise non-technical individuals of potential dangers in attempting to service a product. Products powered by electricity should be serviced or repaired only by experienced professional technicians. Any attempt to service or repair the product or products dealt with in this service information by anyone else could result in serious injury or death.

IMPORTANT SAFETY NOTICE

There are special components used in this equipment which are important for safety. These parts are marked by ⚠ in the Schematic Diagrams, Circuit Board Diagrams, Exploded Views and Replacement Parts List. It is essential that these critical parts should be replaced with manufacturer's specified parts to prevent shock, fire or other hazards.
Do not modify the original design without permission of manufacturer.

IMPORTANT INFORMATION ABOUT LEAD FREE, (PbF), SOLDERING

If lead free solder was used in the manufacture of this product, the printed circuit boards will be marked PbF.
Standard leaded, (Pb), solder can be used as usual on boards without the PbF mark.
When this mark does appear, please read and follow the special instructions described in this manual on the use of PbF and how it might be permissible to use Pb solder during service and repair work.

- When you note the serial number, write down all 11 digits. The serial number may be found on the bottom of the unit.
- The illustrations in this Service Manual may vary sllightly from the actual product.

TABLE OF CONTENTS

PAGE

1 Safety Precautions ---------- **4**
1.1. For Service Technicians ---------- 4
2 Warning ---------- **4**
2.1. Battery Caution ---------- 4
2.2. About Lead Free Solder (Pbf: Pb free) ---------- 4
2.3. Discarding of P.C. Board ---------- 5
3 Specifications ---------- **6**
4 Technical Descriptions ---------- **7**
4.1. Block Diagram (Base Unit) ---------- 7
4.2. Circuit Operation (Base Unit) ---------- 8
4.3. Block Diagram (Handset) ---------- 11
4.4. Circuit Operation (Handset) ---------- 12
4.5. Circuit Operation (Charger Unit) ---------- 13
4.6. Signal Route ---------- 14
5 Location of Controls and Components ---------- **15**
6 Installation Instructions ---------- **15**
7 Operating Instructions ---------- **15**
7.1. For Service Hint ---------- 15
8 Service Mode ---------- **16**
8.1. Engineering Mode ---------- 16
8.2. Copying Phonebook Items when Repairing ---------- 20
8.3. How to Clear User Setting ---------- 22
9 Troubleshooting Guide ---------- **23**
9.1. Troubleshooting Flowchart ---------- 23
9.2. Troubleshooting by Symptom (Base Unit and Charger Unit) ---------- 35
9.3. Troubleshooting by Symptom (Handset) ---------- 39
10 Disassembly and Assembly Instructions ---------- **43**
10.1. Disassembly Instructions ---------- 43
10.2. How to Replace the Handset LCD ---------- 46
11 Measurements and Adjustments ---------- **47**
11.1. Equipment Required ---------- 47
11.2. The Setting Method of JIG (Base Unit) ---------- 47
11.3. Adjustment Standard (Base Unit) ---------- 49
11.4. Adjustment Standard (Charger Unit) ---------- 50
11.5. The Setting Method of JIG (Handset) ---------- 51
11.6. Adjustment Standard (Handset) ---------- 53
11.7. Things to Do after Replacing IC or X'tal ---------- 54
11.8. RF Specification ---------- 56
11.9. How to Check the Handset Speaker or Receiver ---------- 57
11.10. Frequency Table (MHz) ---------- 57
12 Miscellaneous ---------- **58**
12.1. How to Replace the Flat Package IC ---------- 58
12.2. How to Replace the Shield Case ---------- 60
12.3. Terminal Guide of the ICs, Transistors and Diodes and Electrolytic Capacitors ---------- 62
13 Schematic Diagram ---------- **63**
13.1. For Schematic Diagram ---------- 63
13.2. Schematic Diagram (Base Unit) ---------- 64
13.3. Schematic Diagram (Handset) ---------- 66
13.4. Schematic Diagram (Charger Unit) ---------- 68
14 Printed Circuit Board ---------- **69**
14.1. Circuit Board (Base Unit_Main) ---------- 69
14.2. Circuit Board (Handset) ---------- 71
14.3. Circuit Board (Charger Unit) ---------- 73
15 Exploded View and Replacement Parts List ---------- **74**
15.1. Cabinet and Electrical Parts (Base Unit) ---------- 74

PAGE

15.2. Cabinet and Electrical Parts (Handset) ---------- 75
15.3. Cabinet and Electrical Parts (Charger Unit) ---------- 76
15.4. Accessories ---------- 77
15.5. Replacement Part List ---------- 78

1 Safety Precautions

1.1. For Service Technicians

- **Repair service shall be provided in accordance with repair technology information such as service manual so as to prevent fires, injury or electric shock, which can be caused by improper repair work**.
  1. When repair services are provided, neither the products nor their parts or members shall be remodeled.
  2. If a lead wire assembly is supplied as a repair part, the lead wire assembly shall be replaced.
  3. FASTON terminals shall be plugged straight in and unplugged straight out.

- **ICs and LSIs are vulnerable to static electricity.**
  When repairing, the following precautions will help prevent recurring malfunctions.
  1. Cover plastic parts boxes with aluminum foil.
  2. Ground the soldering irons.
  3. Use a conductive mat on worktable.
  4. Do not grasp IC or LSI pins with bare fingers.

2 Warning

2.1. Battery Caution

1. Danger of explosion if battery is incorrectly replaced.
2. Replace only with the same or equivalent type recommended by the manufacturer.
3. Dispose of used batteries according to the manufacture's Instructions.

2.2. About Lead Free Solder (Pbf: Pb free)

Note:

In the information below, Pb, the symbol for lead in the periodic table of elements, will refer to standard solder or solder that contains lead.

We will use PbF solder when discussing the lead free solder used in our manufacturing process which is made from Tin (Sn), Silver (Ag), and Copper (Cu).

This model, and others like it, manufactured using lead free solder will have PbF stamped on the PCB. For service and repair work we suggest using the same type of solder.

Caution

- PbF solder has a melting point that is 50 °F ~ 70 °F (30 °C ~ 40 °C) higher than Pb solder. Please use a soldering iron with temperature control and adjust it to 700 °F ± 20 °F (370 °C ± 10 °C).
- Exercise care while using higher temperature soldering irons.:
  Do not heat the PCB for too long time in order to prevent solder splash or damage to the PCB.
- PbF solder will tend to splash if it is heated much higher than its melting point, approximately 1100 °F (600 °C).
- When applying PbF solder to double layered boards, please check the component side for excess which may flow onto the opposite side (See the figure below).

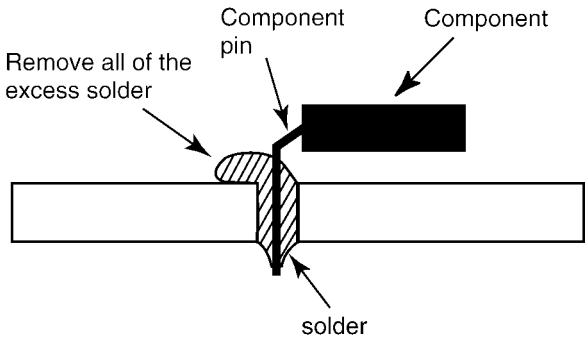

(Slice View)

2.2.1. Suggested PbF Solder

There are several types of PbF solder available commercially. While this product is manufactured using Tin, Silver, and Copper (Sn+Ag+Cu), you can also use Tin and Copper (Sn+Cu) or Tin, Zinc, and Bismuth (Sn+Zn+Bi). Please check the manufacturer's specific instructions for the melting points of their products and any precautions for using their product with other materials.
The following lead free (PbF) solder wire sizes are recommended for service of this product: 0.3 mm, 0.6 mm and 1.0 mm.

0.3 mm X 100 g	0.6 mm X 100 g	1.0 mm X 100 g
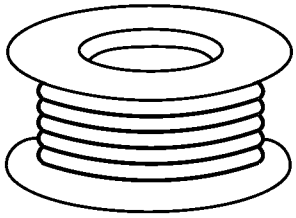	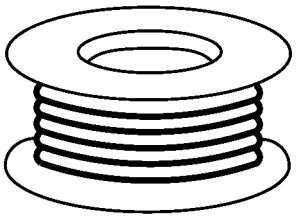	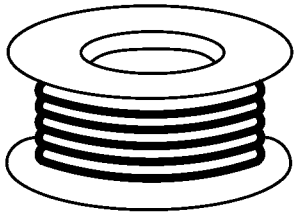

2.3. Discarding of P.C. Board

When discarding P. C. Board, delete all personal information such as telephone directory and caller list or scrap P. C. Board.

3 Specifications

■ **Standard:**
DECT (Digital Enhanced Cordless Telecommunications),
GAP (Generic Access Profile)

■ **Number of channels:**
120 Duplex Channels

■ **Frequency range:**
1.88 GHz to 1.90 GHz

■ **Duplex procedure:**
TDMA (Time Division Multiple Access)

■ **Channel spacing:**
1,728 kHz

■ **Bit rate:**
1,152 kbit/s

■ **Modulation:**
GFSK (Gaussian Frequency Shift Keying)

■ **RF transmission power:**
Average: Approx. 10 mW
Maximum: Approx. 250 mW

■ **Voice coding:**
ADPCM 32 kbit/s

■ **Power source (AC Adaptor):**
220–240 V AC, 50/60 Hz
Base unit: PQLV219CEZ
Charger: PQLV219CEZ

■ **Power consumption**
Base unit:
Standby: Approx. 0.45 W
Maximum: Approx. 3.8 W
Charger:
Standby: Approx. 0.2 W
Maximum: Approx. 3.0 W

■ **Operating conditions:**
0 °C–40 °C, 20 %–80 % relative air humidity (dry)

■ **Dimensions:**
Base unit: Approx. 98 mm x 121 mm x 54 mm
Handset: Approx. 48 mm x 32 mm x 159 mm
Charger: Approx. 72 mm x 85 mm x 51 mm

■ **Mass (weight):**
Base unit: Approx. 110 g
Handset: Approx. 130 g
Charger: Approx. 60 g

Note:
- Design and specifications are subject to change without notice.

Note for Service:
- **Operation range:** Up to 300 m outdoors, Up to 50 m indoors, depending on the condition.
- **Analog telephone connection:** Telephone Line

4 Technical Descriptions

4.1. Block Diagram (Base Unit)

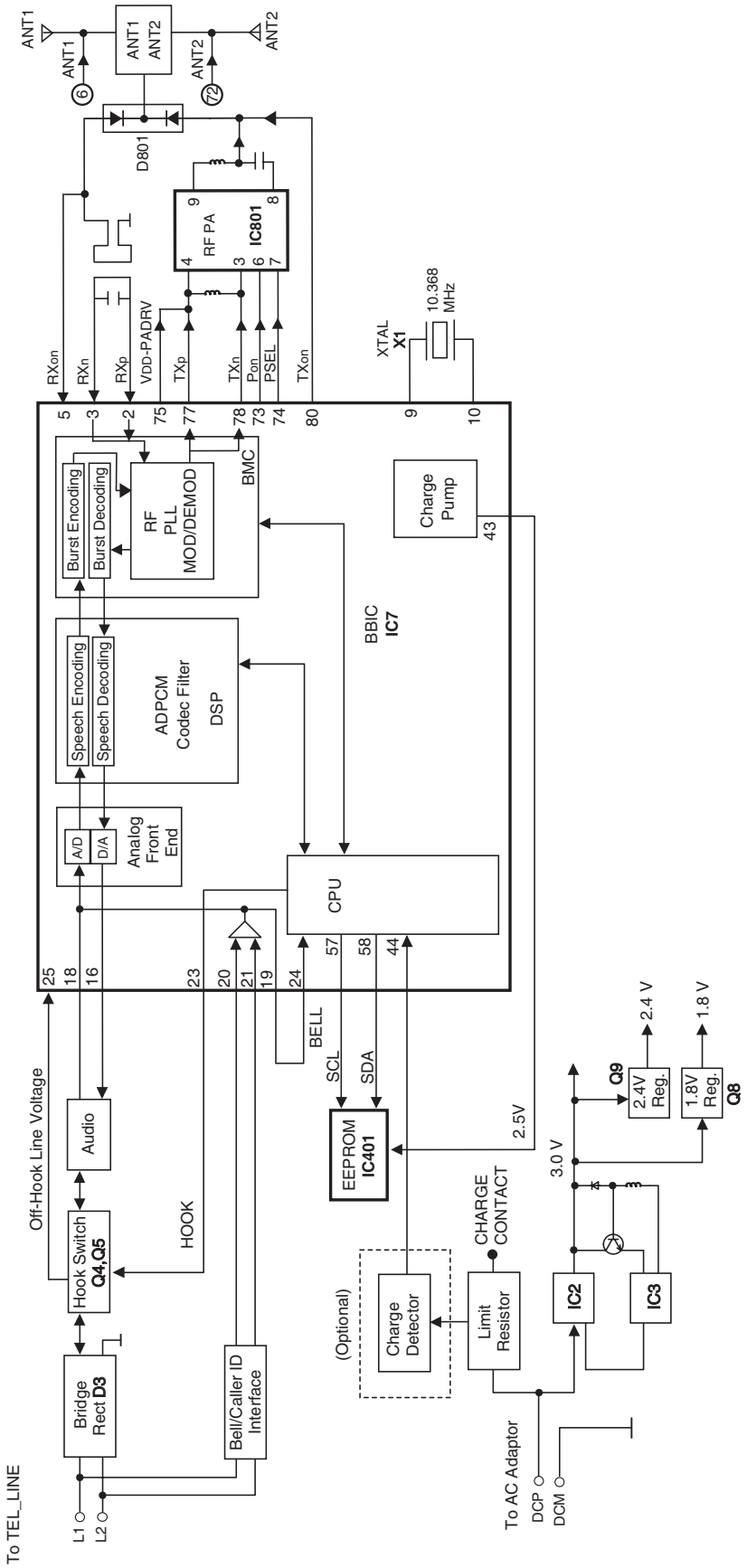

KX-TG2511/2512 BLOCK DIAGRAM (BASE UNIT)

4.2. Circuit Operation (Base Unit)

4.2.1. Outline

Base Unit consists of the following ICs as shown in **Block Diagram (Base Unit)** (P.7).

- DECT BBIC (**B**ase **B**and IC): IC7
  - Handling all the audio, signal and data processing needed in a DECT base unit
  - Controlling the DECT specific physical layer and radio section (**B**urst **M**odule **C**ontroller section)
  - ADPCM code filter for speech encoding and speech decoding (DSP section)
  - Echo-cancellation and Echo-suppression (DSP section)
  - Any tones (tone, sidetone, ringing tone, etc.) generation (DSP section)
  - DTMF receiver (DSP section)
  - Clock Generation for RF Module
  - ADC, DAC, timer, and power control circuitry
  - PLL Oscillator
  - Detector
  - Compress/Expander
  - First Mixer
  - All interfaces (ex: RF Power Amp, EEPROM, LED, Analog Front End, etc.)
- RF Power Amp.: IC801
  - Amplifier for transmission and reception
- EEPROM: IC401
  - Temporary operating parameters (for RF, etc.)
- Additionally,
  - Power Supply Circuit (+3.0 V, +2.4 V, +1.8 V output)
  - Crystal Circuit (10.368 MHz)
  - Charge Circuit
  - Telephone Line Interface Circuit

4.2.2. Power Supply Circuit

The power is supplied to the DECT BBIC, RF Module, EEPROM and Charge Contact from AC Adaptor (+6.5 V) as shown in Fig.101. The power supply is as follows;

- DECT BBIC (IC7):
  DC Jack (+6.5 V) → IC2 → IC7
  DC Jack (+6.5 V) → IC2 → Q9 → IC7
  DC Jack (+6.5 V) → IC2 → Q8 → IC7
- RF Power Amp. (IC801):
  DC Jack (+6.5 V) → IC2 → IC801 (Power AMP)
- EEPROM (IC401):
  DC Jack (+6.5 V) → IC2 → IC7→ IC401
- Charge Contact (TP16):
  DC Jack (+6.5 V) → R56 → R55 → D22→ TP16

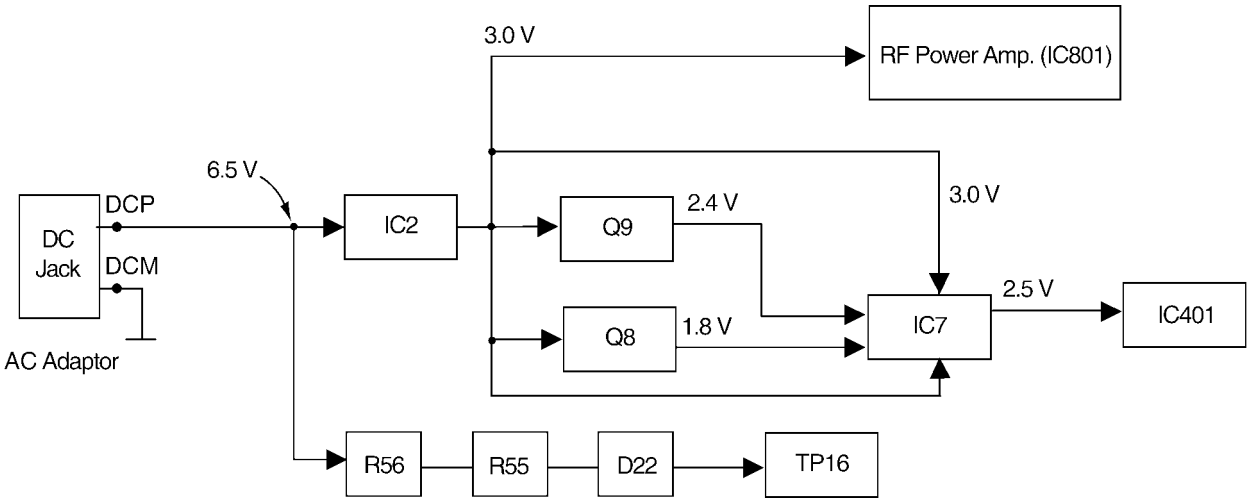

<Fig.101>

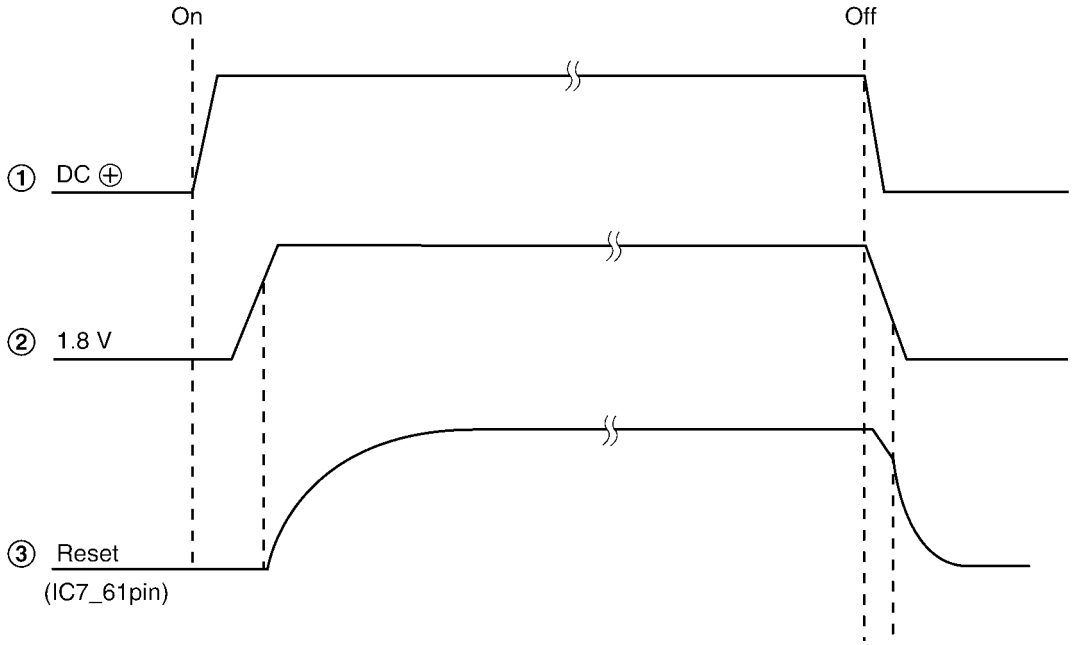

4.2.3. Telephone Line Interface

<Function>

- Bell signal detection
- Clip signal detection
- ON/OFF hook circuit

Bell & Clip (: Calling Line Identification Presentation: Caller ID) signal detection:

In the standby mode, Q3 is open to cut the DC loop current and decrease the ring load.

When ring voltage appears at the L1T (A) and L1R (B) leads (when the telephone rings), the AC ring voltage is transferred as follows;

- B → L2 → C4 → R6 → R33 → IC7 Pin 21 (CID INp)
- A → L1 → C3 → R4 → R35 → IC7 Pin 20 (CID INn)

ON/OFF hook circuit:

In the standby mode, Q3 is open, and connected as to cut the DC loop current and to cut the voice signal. The unit is consequently in an **on-hook condition**.

When IC7 detects a ring signal or press the TALK Key onto the handset, Q4 turns on and then Q3 turns on, thus providing an **off-hook condition** (DC current flows through the circuit) and the following signal flow makes the loop current.

- B → L2 →D3 → Q3 → Q5 → R21 → R22 → D3 → L1 →A [**OFF HOOK**]

4.2.4. Transmitter/Receiver

- Audio Circuits and DTMF tone signal circuits.

Base Unit and Handset mainly consist of RF Module and DECT BBIC.

Base Unit and Handset transmit/receive voice signal and data signal through the antenna on carrier frequency.

Signal Path:

*Refer to **Signal Route** (P.14).

4.2.4.1. Transmitter Block

The voice signal input from the TEL LINE interface goes to RF Power Amp. (IC801) through DECT BBIC (IC7) as shown in **Block Diagram (Base Unit)** (P.7)

The voice signal passes through the analog part of IC7 where it is amplified and converted to a digital audio stream signal. The burst switch controller processes this stream performing encryption and scrambling, adding the various other fields to produce the GAP (**G**eneric **A**ccess **P**rofile) standard DECT frame, assigning to a time slot and channel etc.

In IC7, the carrier frequency is changing, and frequency modulated RF signal is generated.In IC801,RF signal is amplified, and radiated from antenna. Handset detects the voice signal or data signal in the circuit same as the following explanation of Receiver Block.

4.2.4.2. Receiver Block

The signal of 1900 MHz band (1881.792 MHz ~ 1897.344 MHz) which is input from antenna is input to IC7 as shown in **Block Diagram (Base Unit)** (P.7).

In IC7, the signal of 1900 MHz band is downconverted to 864 kHz signal and demodulated, as GAP (**G**eneric **A**ccess **P**rofile) standard DECT frames. It passes through the decoding section burst switch controller where it separates out the frame information and performs de-encryption and de-scrambling as required. It then goes to the DSP section where it is turned back into analog audio. This is amplified by the analog front end, and goes to the TEL LINE Interface.

4.2.5. Pulse Dialling

During pulse dialling the hookswitch (Q3, Q4) is used to generate the pulses using the HOOK control signal, which is set high during pulses. To force the line impedance low during the “pause” intervals between dial pulses, the PULSE_DIAL signal turns on Q2.

4.3. Block Diagram (Handset)

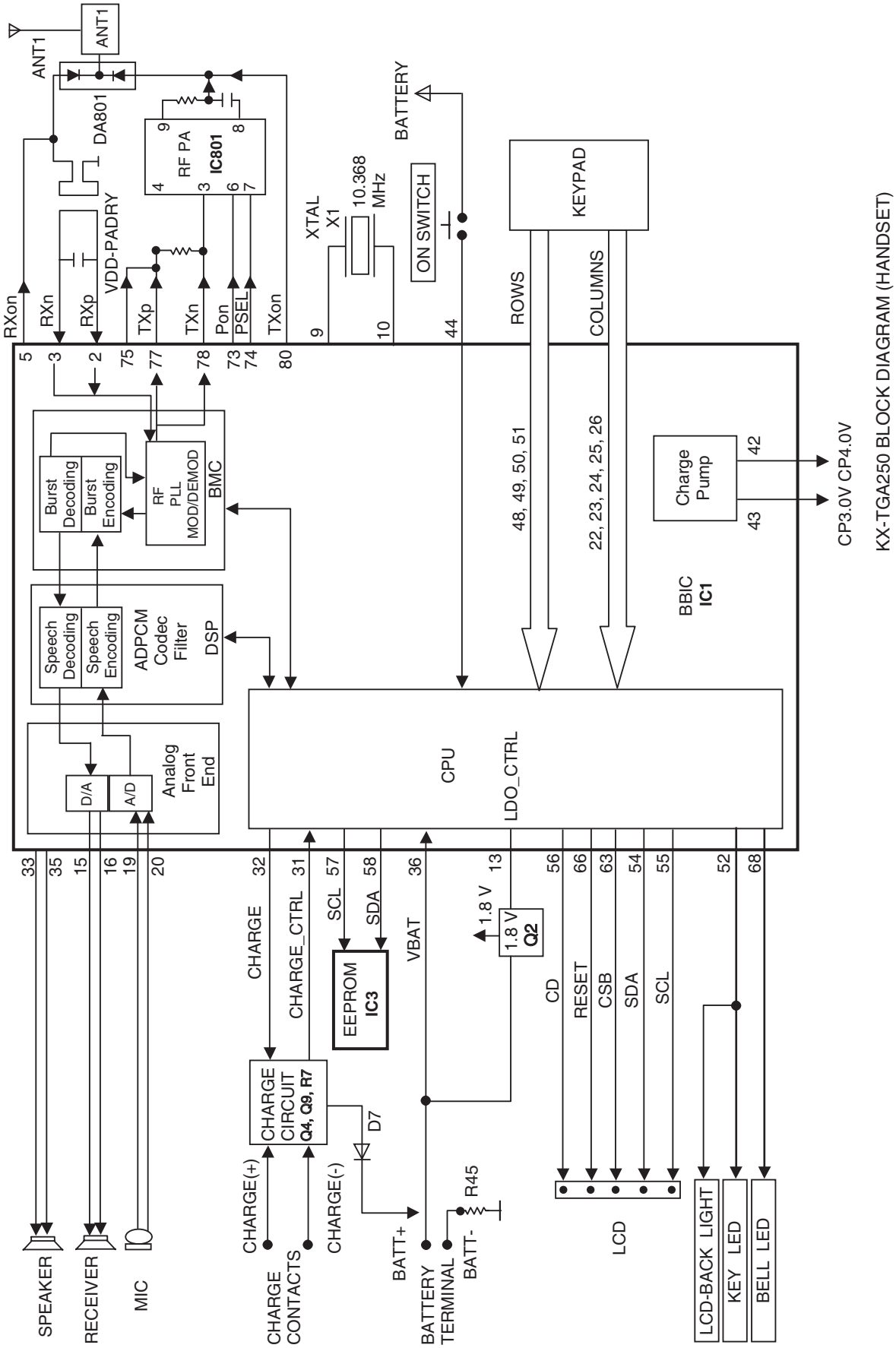

4.4. Circuit Operation (Handset)

4.4.1. Outline

Handset consists of the following ICs as shown in **Block Diagram (Handset)** (P.11).

- DECT BBIC (**B**ase **B**and IC): IC1
  - All data signals (forming/analyzing ACK or CMD signal)
  - All interfaces (ex: Key, Detector Circuit, Charge, DC/DC Converter, EEPROM, LCD, RF Power Amp.)
  - PLL Oscillator
  - Detector
  - Compress/Expander
  - Reception
- RF Power Amp: IC801
  - Amplifier for transmission
- EEPROM: IC3
  - Temporary operating parameters (for RF, etc.)

4.4.2. Power Supply Circuit/Reset Circuit

Circuit Operation:

When power on the Handset, the voltage is as follows;
BATTERY(2.2 V ~ 2.6 V: BATT+) → F1 → Q2 (1.8 V), IC1-43pin (2.5V)
The Reset signal generates IC1 (61 pin) and 1.8 V.

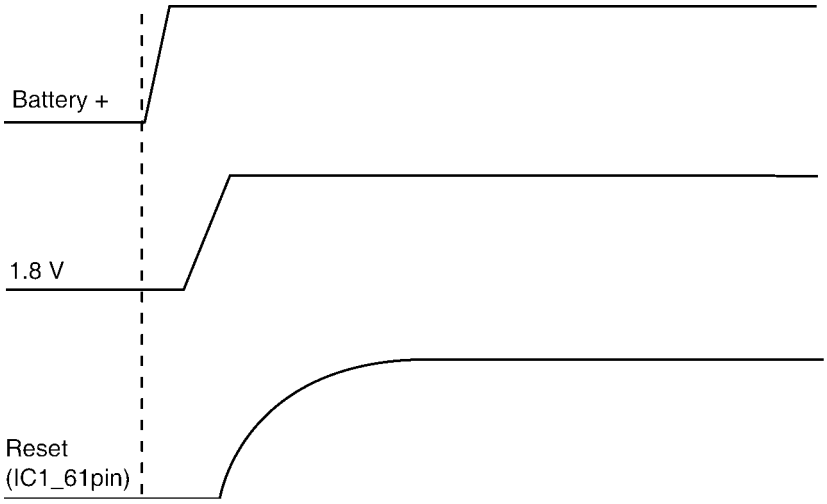

4.4.3. Charge Circuit

Circuit Operation:

When charging the handset on the Base Unit, the charge current is as follows;
DC+(6.5 V) → R56 → R55 → D22 → CHARGE+(Base) → CHARGE+(Handset) → Q4 → D7→ F1 → BATTERY+... Battery...
BATTERY- → R45 → GND → CHARGE-(Handset)→ CHARGE-(Base) → GND → DC-(GND)
In this way, the BBIC on Handset detects the fact that the battery is charged.
The charge current is controlled by switching Q9 of Handset.

Refer to Fig.101 in **Power Supply Circuit** (P.9).

4.4.4. Battery Low/Power Down Detector

Circuit Operation:

"Battery Low" and "Power Down" are detected by BBIC which check the voltage from battery.
The detected voltage is as follows;

- Battery Low

  Battery voltage: V(Batt) ≦ 2.25 V ± 50 mV

  The BBIC detects this level and "▭" starts flashing.
- Power Down

  Battery voltage: V(Batt) ≦ 2.0 V ± 50 mV

  The BBIC detects this level and power down.

4.4.5. Speakerphone

The hands-free loudspeaker at SP+ and SP- is used to generate the ring alarm.

4.5. Circuit Operation (Charger Unit)

4.5.1. Power Supply Circuit

The power supply is as shown.

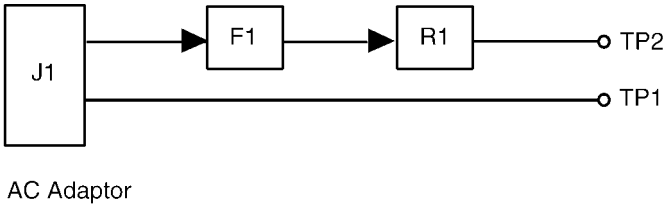

4.6. Signal Route

SIGNAL ROUTE — IN → SIGNAL ROUTE → OUT

DTMF TONE TEL OUT (to Tel Line)

(BASE UNIT)
IC7 (16) - R116 - R29 - C22 - Q5 - Q3 - D3 — L1 - A / L2 - B

DTMF TONE TEL IN (from Tel Line)

(BASE UNIT)
A - L1 / B - L2 — D3 - Q3 - Q5 - R20 - C56 - R117 - IC7 (18)

CDL TX (to Tel Line)

(HANDSET)
MIC (+) - R73 - C11 - RA4 - IC1 (20) / MIC (–) - R74 - C13 - RA4 - IC1 (19) — IC1(77) - IC801 (4) / IC1(78) - IC801 (3) — IC801(9) - L802 - C812 - DA801 - C803 - ANT to BASE

(BASE UNIT)
from HANDSET ANT1 - C851 / ANT2 - C853 — DA802 - C859 - C803 - DA801 - C826 — IC7 (3) / IC7 (2)
IC7 (16) - R116 - R29 - C22 - Q5 - Q3 - D3 — L1 - A / L2 - B

CDL RX (from Tel Line)

(BASE UNIT)
A - L1 / B - L2 — D3 - Q3 - Q5 - R20 - C56 - R117 - IC7 (18) — IC7 (77) - IC801 (4) / IC7 (78) - IC801 (3) — IC801 (9) - L802 - C812 - DA801 - C803- C859 - DA802 — C851 - ANT1 / C853 - ANT2 to HANDSET

(HANDSET)
from BASE UNIT ANT - C803 - DA801 - C826 — IC1 (3) / IC1 (2)
IC (16) - RECEIVER (+) / IC (15) - RECEIVER (–)

Caller ID (from Tel Line)

(BASE UNIT)
B - L2 - C4 - R6 - R33 - IC7 (21) / A - L1 - C3 - R4 - R35 - IC7 (20) — IC7 (77) - R801 (4) / IC7 (78) - R801 (3) — IC801 (9) - L802 - C812 - DA801 - C803 - C859 - DA802 — C851 - ANT1 / C853 - ANT2 to HANDSET

SP-PHONE TX (to Tel Line)

(HANDSET)
MIC (+) - R73 - C11 - RA4 - IC1 (20) / MIC (–) - R74 - C13 - RA4 - IC1 (19) — IC1(77) - IC801 (4) / IC1(78) - IC801 (3) — IC801(9) - L802 - C812 - DA801 - C803 - ANT to BASE

(BASE UNIT)
from HANDSET ANT1 - C851 / ANT2 - C853 — DA802 - C859 - C803 - DA801 -C826 — IC7 (3) / IC7 (2)
IC7 (16) - R116 - R29 - C22 - Q5 - Q3 - D3 — L1 - A / L2 - B

SP-PHONE RX (to Tel Line)

(BASE UNIT)
A - L1 / B - L2 — D3 - Q3 - Q5 - R20 - C56 - R117 - IC7 (18) — IC7 (77) - IC801 (4) / IC7 (78) - IC801 (3) — IC801 (9) - L802 - C812 - DA801 - C803 - C859 - DA802 — C851 - ANT1 / C853 - ANT2 to HANDSET

(HANDSET)
from BASE UNIT ANT - C803 - DA801 - C826 — IC1 (3) / IC1 (2)
IC1 (33) - SP (-) / IC1 (35) - SP (+)

5 Location of Controls and Components

Refer to the Operating Instructions.

Note:

You can download and refer to the Operating Instructions (Instruction book) on TSN Server.

6 Installation Instructions

Refer to the Operating Instructions.

Note:

You can download and refer to the Operating Instructions (Instruction book) on TSN Server.

7 Operating Instructions

Refer to the Operating Instructions.

Note:

You can download and refer to the Operating Instructions (Instruction book) on TSN Server.

7.1. For Service Hint

Items	Contents
Battery	You could use other rechargeable batteries sold in a market, but the unit is not guaranteed to work properly.
	The battery strength may not be indicated correctly if the battery is disconnected and connected again, even after it is fully charged. In that case, by recharging the battery as mentioned in the Operating Instructions, you will get a correct indication of the battery strength.
PIN Code	Change the PIN using the following method. **1** **[≡/OK]** **2** **[▼]/[▲]**: "Base Unit Setup" → **[≡/OK]** **3** **[▼]/[▲]**: "Base Unit PIN" → **[≡/OK]** **4** **[*][7][0][0][0]** **5** Enter the new 4-digit base unit PIN. → **[≡/OK]** → **[⚒⏻]**

8 Service Mode

8.1. Engineering Mode

8.1.1. Base Unit

Important:
Make sure the address on LCD is correct when entering new data. Otherwise, you may ruin the unit.

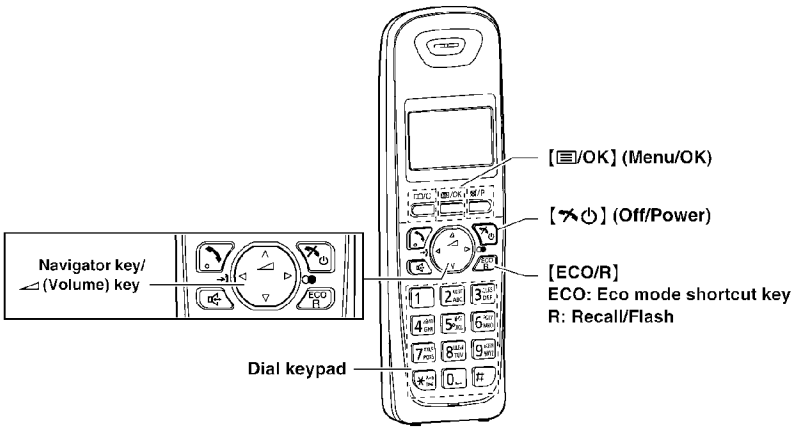

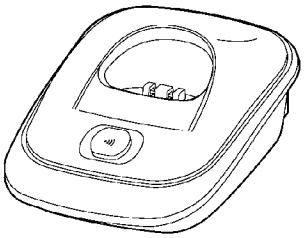

H/S key operation

H/S LCD

1). Register a Handset to a Base Unit. (*1)

2). Press ≡ .

Caller List
▼▲

3). Select "Base Unit Setup" using 【▲】or【▼】
then press OK or 【►】.

Base Unit Setup
▼▲

Recall/Flash
▼▲

4). Enter "7", "2", "6", "2", "7", "6", "6", "4".
Note: 7262 7664 = PANA SONI
(see letters printed on dial keys)

5). Select "Write EEP" using 【▲】or【▼】
then press OK or 【►】.

Service Mode
Read EEP
►Write EEP

6). Enter "●", "●", "●", "●" (Address). (*2)

7). Enter "＊", "＊" (New Data). (*2)

Set Addr.:
●●●● ＊＊ ← Default Data

Set Addr.:
●●●● ＊＊ ← New Data

8). Press OK , a long confirmation beep
will be heard.

Set Addr.:
_ _ _ _ _ _

9). Press 【⏻】 (off) to return to standby mode.
After that, turn the base unit power off and then power on.

Frequently Used Items (Base Unit)

ex.)

Items	Address	Default Data	New Data		Remarks
C-ID (FSK) sensitivity	04 8B	00	01 (6 dB up)	02 (12 dB up)	When hex changes from “00” to “01” or “02”, gain increases by 6 dB or 12 dB.
Frequency	00 08/00 07	02/70	-	-	Use these items in a **READ-ONLY** mode to confirm the contents. Careless rewriting may cause serious damage to the computer system.
ID	00 02~00 06	Given value	-	-	
Bell length	02 18	32 (5sec) (*3)	1E (3 sec)	14 (2 sec)	This is time until bell stops ringing. (Unit: 100 ms)
PULSE Dial speed (10PPS -> 20PPS)	01 F8	28 (40msec) (*3)	14 (20msec)	-	This is pulse make time. (Unit:1 ms)
	01 F9	3C (60msec) (*3)	1E (30msec)	-	This is pulse break time. (Unit:1 ms)
	02 07	57 (870msec) (*3)	2C (440msec)	-	This is inter-digit time in pulse mode. (Unit:10 ms)

Note:

(*1) Refer to **Registering a Handset to a Base Unit** in the Operating Instructions.

(*2) When you enter the address or New Data, please refer to the table below.

Desired Number (hex)	Input Keys	Desired Number (hex)	Input Keys
0	0	A	[R] + 0
1	1	B	[R] + 1
.	.	C	[R] + 2
.	.	D	[R] + 3
.	.	E	[R] + 4
9	9	F	[R] + 5

(*3)

Bell length	32(hex) = 50(dec) → 50 × 100 msec = 5000 msec (5 sec)
PULSE Dial speed (10PPS -> 20PPS)	28(hex) = 40(dec) → 40 × 1msec = 40msec
	3C(hex) = 60(dec) → 60 × 1msec = 60msec
	57(hex) = 87(dec) → 87 × 10msec = 870msec

8.1.2. Handset

Important:
Make sure the address on LCD is correct when entering new data. Otherwise, you may ruin the unit.

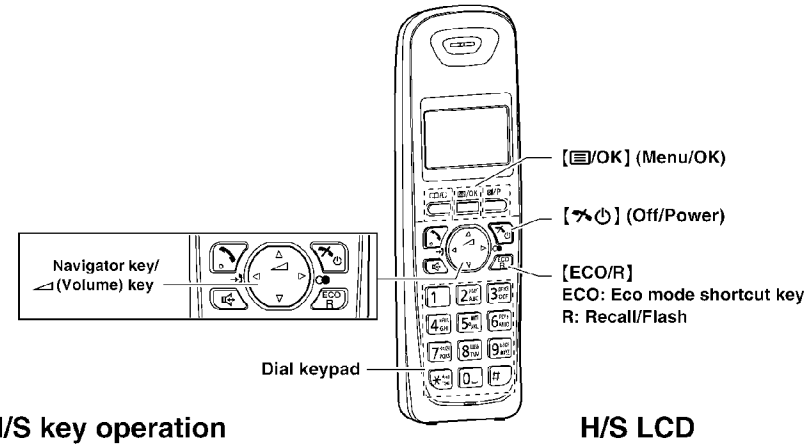

H/S key operation | **H/S LCD**

1). Press [≡] .

Caller List
▼▲

2). Select "Handset Setup" using [▲]or[▼] then press OK or [►].

Handset Setup
▼▲

3). Enter "7", "2", "6", "2", "7", "6", "6", "4".
Note: 7262 7664 = PANA SONI
(see letters printed on dial keys)

Set Date & Time
▼▲

4). Select "Write EEP" using[▲] or[▼] then press OK or [►].

Service Mode
Read EEP
►Write EEP

5). Enter "●", "●", "●", "●" (Address). (*1)

Set Addr.:
●●●● ** ← Default Data

6). Enter "*", "*" (New Data). (*1)

Set Addr.:
●●●● ** ← New Data

7). Press OK , a long confirmation beep will be heard.

Set Addr.:
– – – – – –

8). Press [] (off) to return to standby mode.
After that, remove and reinsert the batteries. Press the Power button for about 1 second if the power is not turned on.

Frequently Used Items (Handset)

ex.)

Items	Address	Default Data	New Data	Possible Adjusted Value MAX (hex)	Possible Adjusted Value MIN (hex)	Remarks
Sending level	03 17	Adjusted value	Given value	F3	F3	(*2)
Receiving level	03 18	Adjusted value	Given value	DB	DB	(*3)
Battery Low	00 04	70	-	-	-	(*4)
Frequency	00 02/00 01	02/70	-	-	-	
ID	00 10~00 14	Given value	-	-	-	

Note:

(*1) When you enter the address or New Data, please refer to the table below.

Desired Number (hex.)	Input Keys	Desired Number (hex.)	Input Keys
0	0	A	[R] + 0
1	1	B	[R] + 1
.	.	C	[R] + 2
.	.	D	[R] + 3
.	.	E	[R] + 4
9	9	F	[R] + 5

(*2) When adding “01” (hex) to default value, sending level increases by 0.25 dB.

ex.)

Item	Default Data	New Data	
	E7	EB	E3
Sending level	-2.5dBm	-1.5dBm	-3.5dBm

(*3) When reducing “01” (hex) from default value, receiving level increases by 0.25 dB.

ex.)

Item	Default Data	New Data	
	E7	EB	E3
Receiving level	-23dBm	-22dBm	-24dBm

(*4) Use these items in a READ-ONLY mode to confirm the contents. Careless rewriting may cause serious damage to the handset.

8.2. Copying Phonebook Items when Repairing

You can copy the handset phonebook to another (compatible Panasonic) handset. This will help to save the original phonebook data which the customer has registered.
Available models: KX-TG2511/KX-TG2512
Refer to the following procedures.

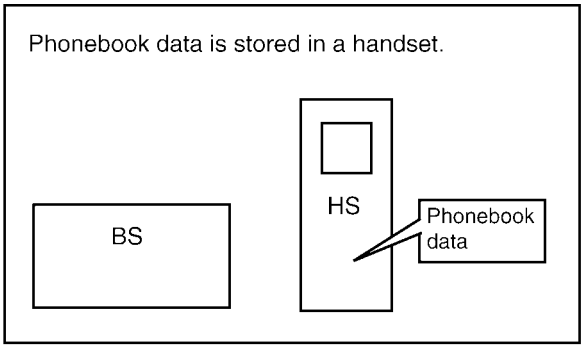

Case 1: A base unit has a defect.
(Replacing a base unit PCB etc...)

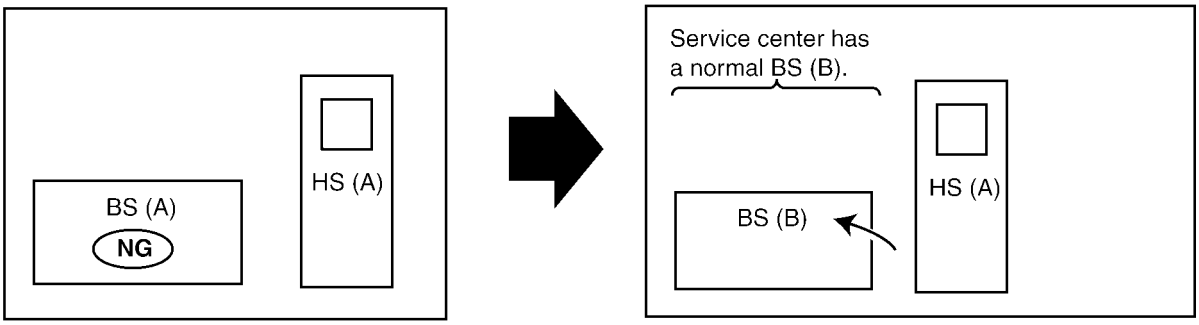

1. Register HS (A) to BS (B).
   HS (A) is normal, therefore no need to copy the phonebook data.

Case 2: A base unit has a defect.
(Replacing both a base unit and a handset)

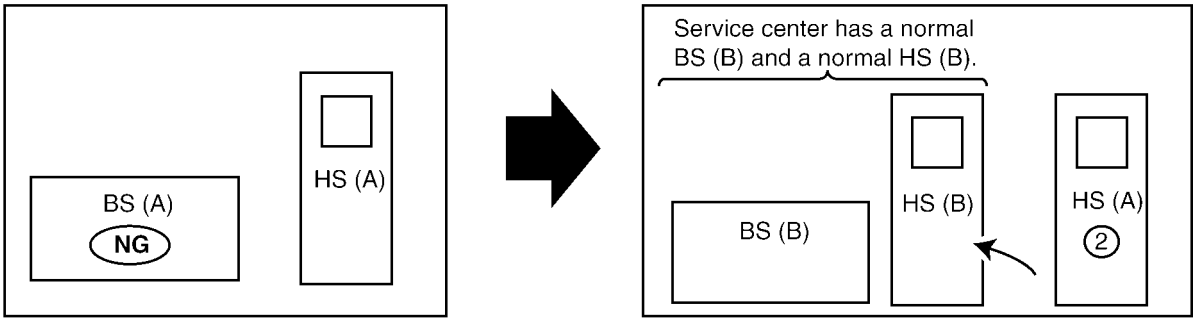

1. Register HS (A) to BS (B) as a handset no. 2.
2. Copy the phonebook data from HS (A) to HS (B).
3. Cancel the HS 2 (HS (A)).

Note:
- BS=Base Unit, HS=Handset
- If the max number of handsets are already registered to the base unit, a new handset cannot be registered.
- To register the handset, refer to **Registering a Handset to a Base Unit** in the Operating Instructions.
- To cancel the handset, refer to **Deregistering a Handset** in the Operating Instructions.
- To copy the handset phonebook, refer to **Copying Phonebook Entries** in the Operating Instructions.

Case 3: A handset has a defect.
(Radio transmission is functioning.)

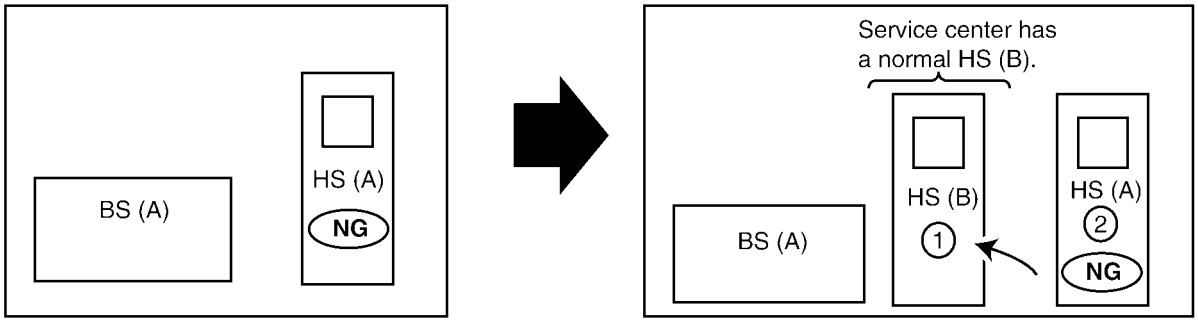

1. Cancel HS (A).
2. Register HS (B) as a handset no. 1.
3. Register HS (A) as a handset no. 2.
4. Copy the phonebook data from HS (A) to HS (B).
5. Cancel HS 2 (HS (A)).

Case 4: A handset has a defect.
(Radio transmission is functioning.)

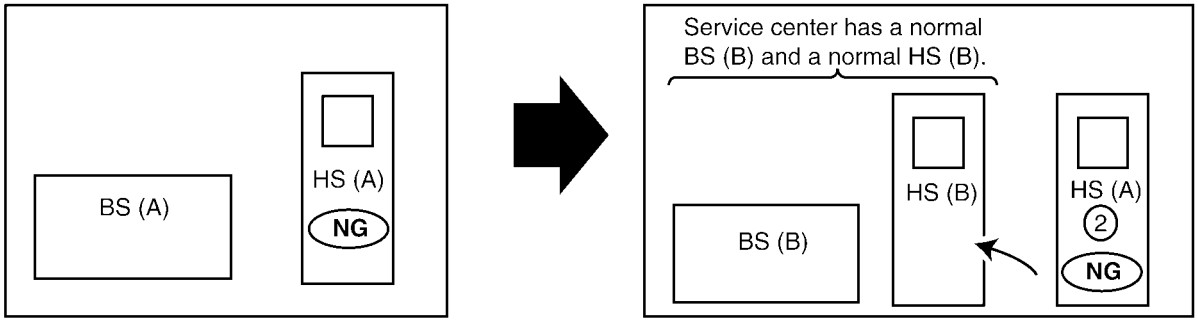

1. Register HS (A) as a handset no. 2.
2. Copy the phonebook data from HS (A) to HS (B).
3. Cancel HS 2 (HS (A)).

Note:
- BS=Base Unit, HS=Handset
- If the max number of handsets are already registered to the base unit, a new handset cannot be registered.
- To register the handset, refer to **Registering a Handset to a Base Unit** in the Operating Instructions.
- To cancel the handset, refer to **Deregistering a Handset** in the Operating Instructions.
- To copy the handset phonebook, refer to **Copying Phonebook Entries** in the Operating Instructions.

8.3. How to Clear User Setting

Units are reset to the Factory settings by this operation (Erase stored Phone numbers, Caller list and etc.)

Note:

- Some menus are not reset. Refer to **Operating Instructions** (P.15).
- The reset menus differ depending on the following operations.
- **This operation should not be performed for a usual repair.**

8.3.1. Resetting both base unit and handset

Both the base unit and the registered handset which you did the following steps ① to ④ are reset. Other registered handsets will not be reset.

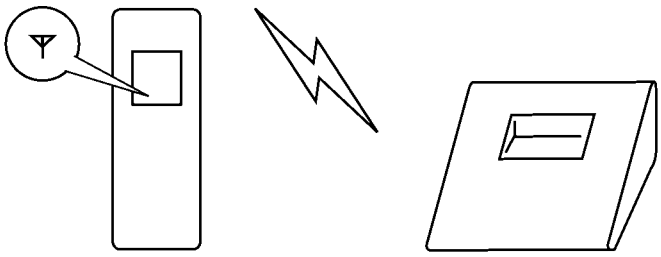

Handset **Base unit**

① Connect the AC adaptor to the base unit and install the charged batteries into the handset.

② Confirm the handset is registered to the base unit (lights).
If the handset is not registered to the base unit (is flashing), register it. (*1)

③ Lift the handset and press 【】 to put the handset in standby mode.

④ Press 1, 5, 9 and * key of the handset simultaneously until a confirmation tone is heard.

⑤ Disconnect the AC adaptor, then remove the battery.

Note:

(*1) Refer to **Registering a Handset to a Base Unit** in the Operating Instructions.

8.3.2. Resetting only handset

The only handset is reset by doing the following steps ① to ④.

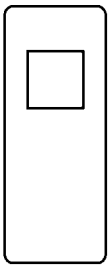

Handset

① Install the charged batteries into the handset.

② Lift the handset and press 【】 to put the handset in standby mode.

③ Press 3, 5, 7 and # key of the handset simultaneously until a confirmation tone is heard. (*2)

④ Remove the battery.

Note: (*2)

- The handset registration to the base unit is cancelled.
- If the handset needs to be registered to the base unit, refer to **Registering a Handset to a Base Unit** in the Operating Instructions.
- If users do not bring the base unit with them, the registration procedure has to be done by users themselves.

9 Troubleshooting Guide

9.1. Troubleshooting Flowchart

Flow Chart

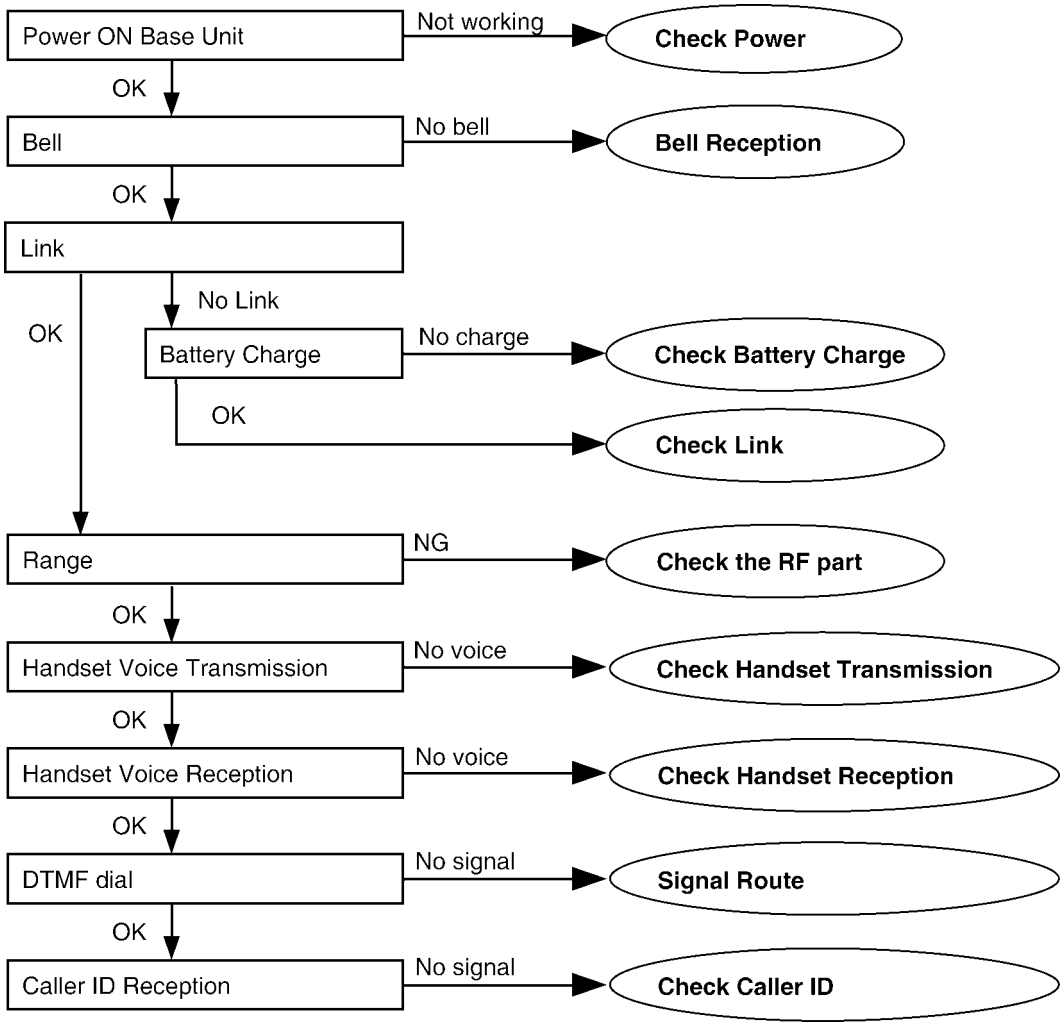

Cross Reference:

Check Power (P.24)
Bell Reception (P.34)
Check Battery Charge (P.25)
Check Link (P.26)
Check the RF part (P.30)
Check Handset Transmission (P.33)
Check Handset Reception (P.33)
Signal Route (P.14)
Check Caller ID (P.33)

9.1.1. Check Power

9.1.1.1. Base Unit

Is the AC Adaptor inserted into AC outlet? (*1)

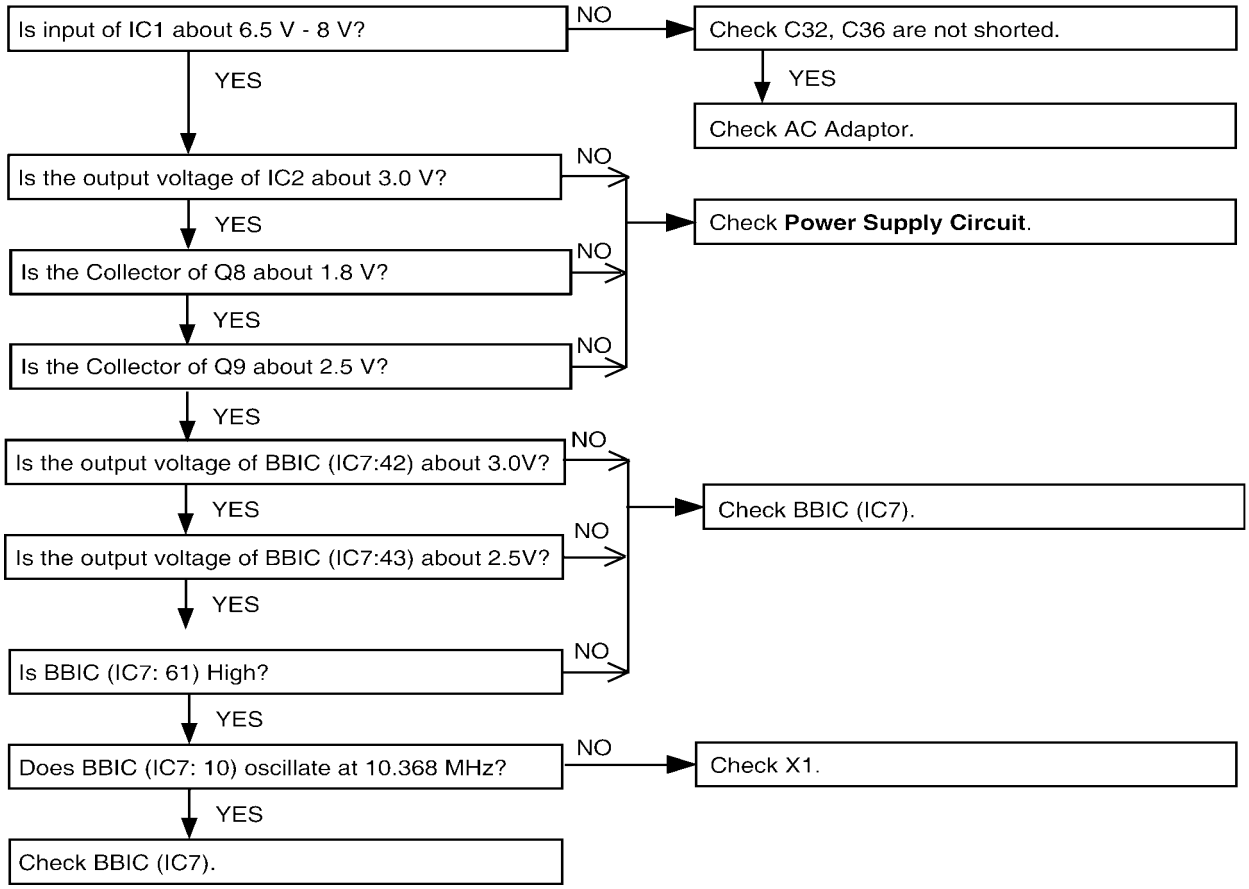

Cross Reference:

Power Supply Circuit (P.9)

Note:

(*1) Refer to **Specifications** (P.6) for part number and supply voltage of AC Adaptor.

9.1.1.2. Handset

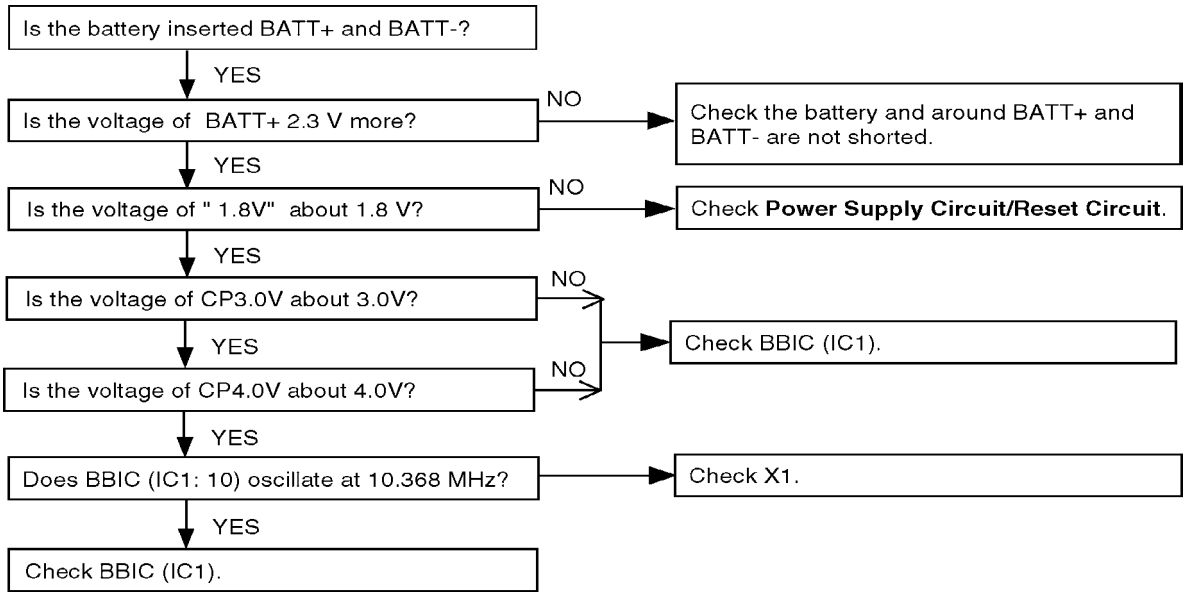

Cross Reference:

Power Supply Circuit/Reset Circuit (P.12)

9.1.2. Check Battery Charge

9.1.2.1. Base Unit

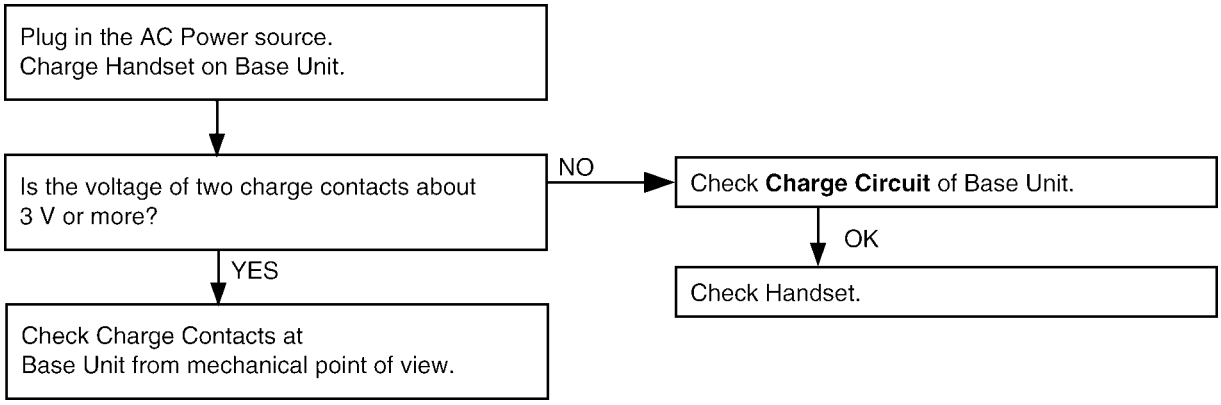

Cross Reference:

Charge Circuit (P.12)

9.1.2.2. Handset

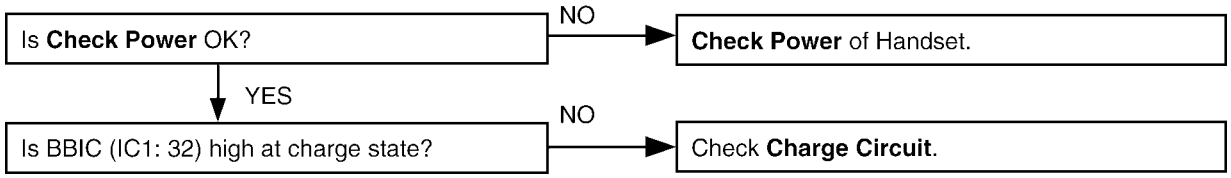

Cross Reference:

Check Power (P.24)

Charge Circuit (P.12)

9.1.2.3. Charger Unit

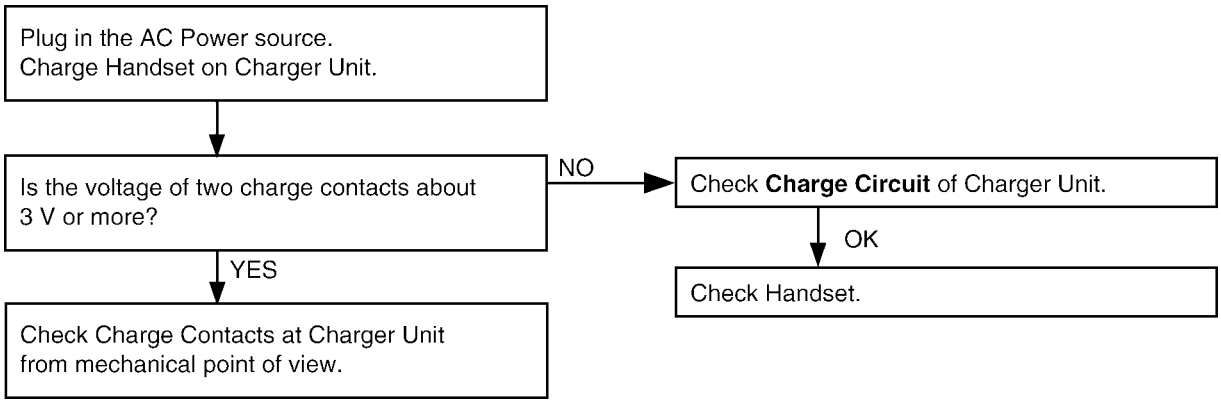

Cross Reference:

Charge Circuit (P.12)

9.1.3. Check Link

9.1.3.1. Base Unit

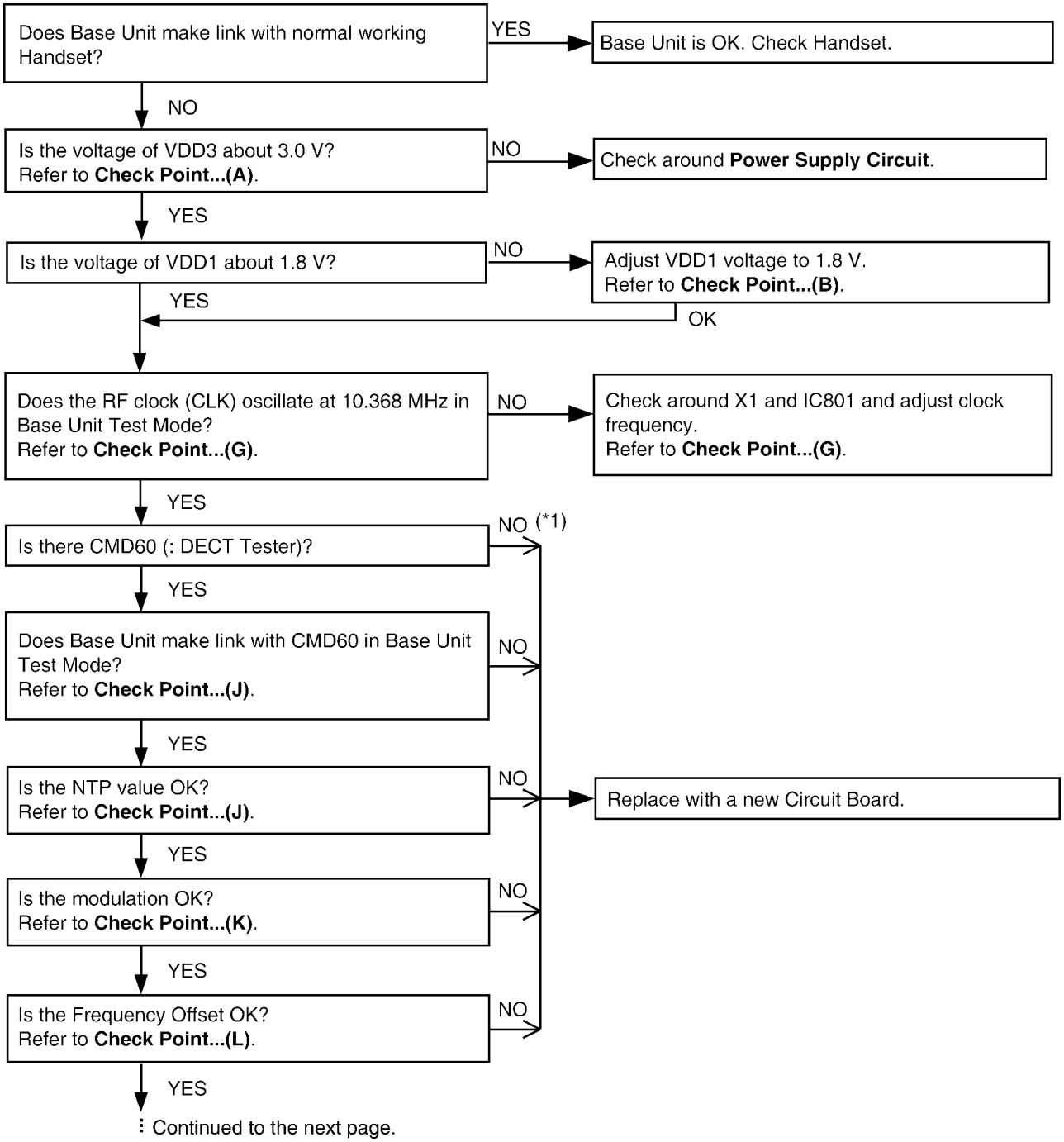

Note:

(*1) Refer to **Troubleshooting by Symptom (Base Unit and Charger Unit)** (P.35)

Cross Reference:

Check Point (Base Unit) (P.35)

Power Supply Circuit (P.9)

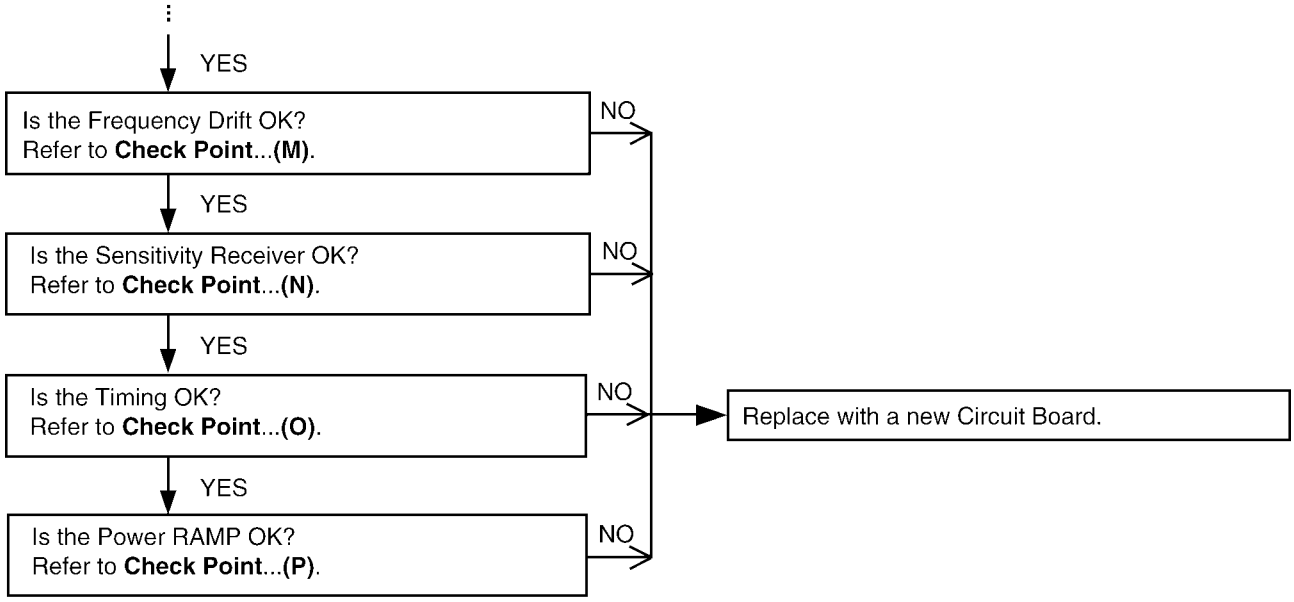

Cross Reference:

Check Point (Base Unit) (P.35)

9.1.3.2. Handset

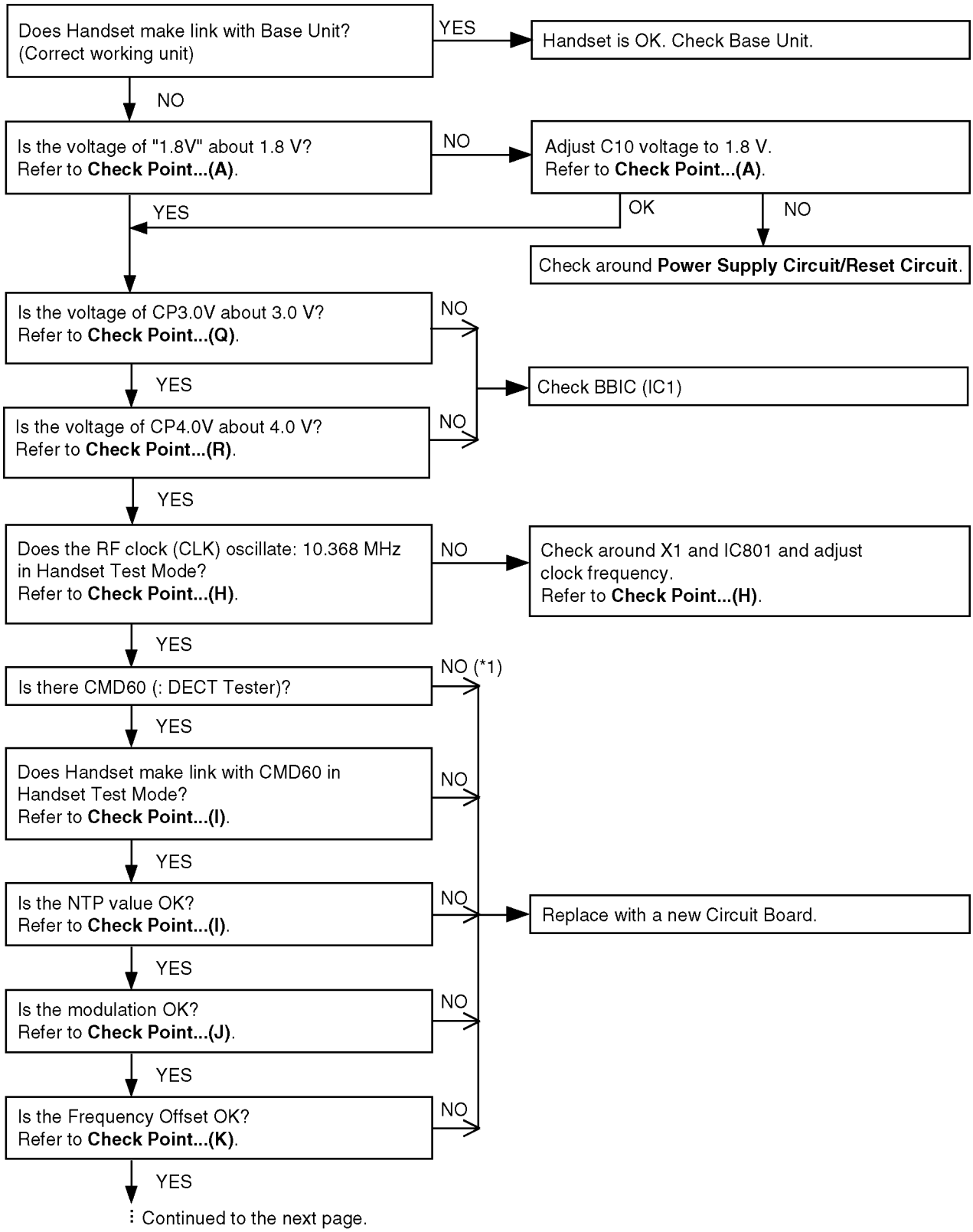

Note:

(*1) Refer to **Troubleshooting by Symptom (Handset)** (P.39)

Cross Reference:

Check Point (Handset) (P.39)

Power Supply Circuit/Reset Circuit (P.12)

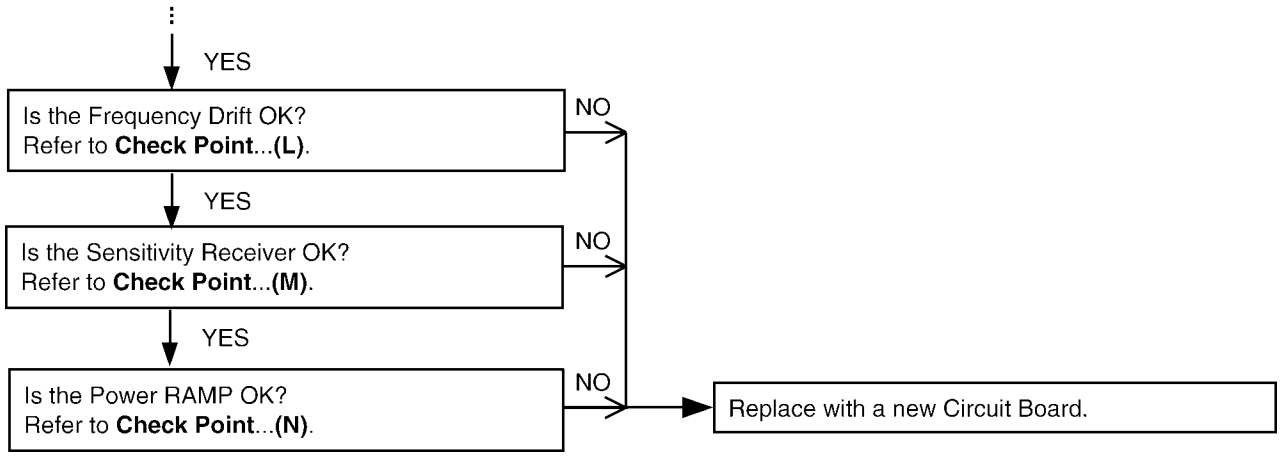

Cross Reference:

Check Point (Handset) (P.39)

9.1.4. Check the RF part

9.1.4.1. Finding out the Defective part

1. Prepare Regular HS (Handset) and Regular BU (Base unit).
2. a. Re-register regular HS (Normal mode) to Base Unit (to be checked).
   If this operation fails in some ways, the Base Unit is defective.
   b. Re-register Handset (to be checked) to regular BU (Normal mode).
   If this operation fails in some ways, the Handset is defective.

After All the Checkings or Repairing

1. Re-register the checked Handset to the checked Base Unit, and Regular HS to Regular BU.

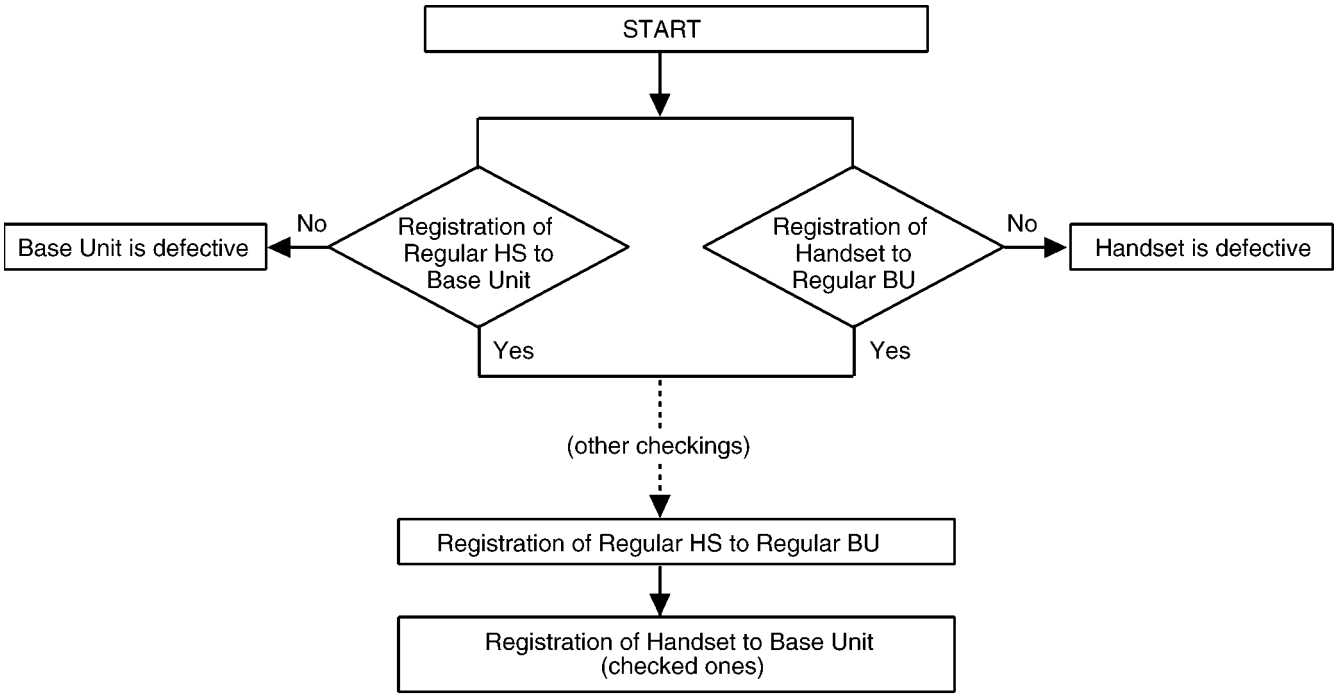

Note:

If you need to register a handset, refer to **Registering a Handset to a Base Unit** in the Operating Instructions.

9.1.4.2. RF Check Flowchart

Each item (1 ~ 3) of RF Check Flowchart corresponds to **Check Table for RF part** (P.32).
Please refer to the each item.

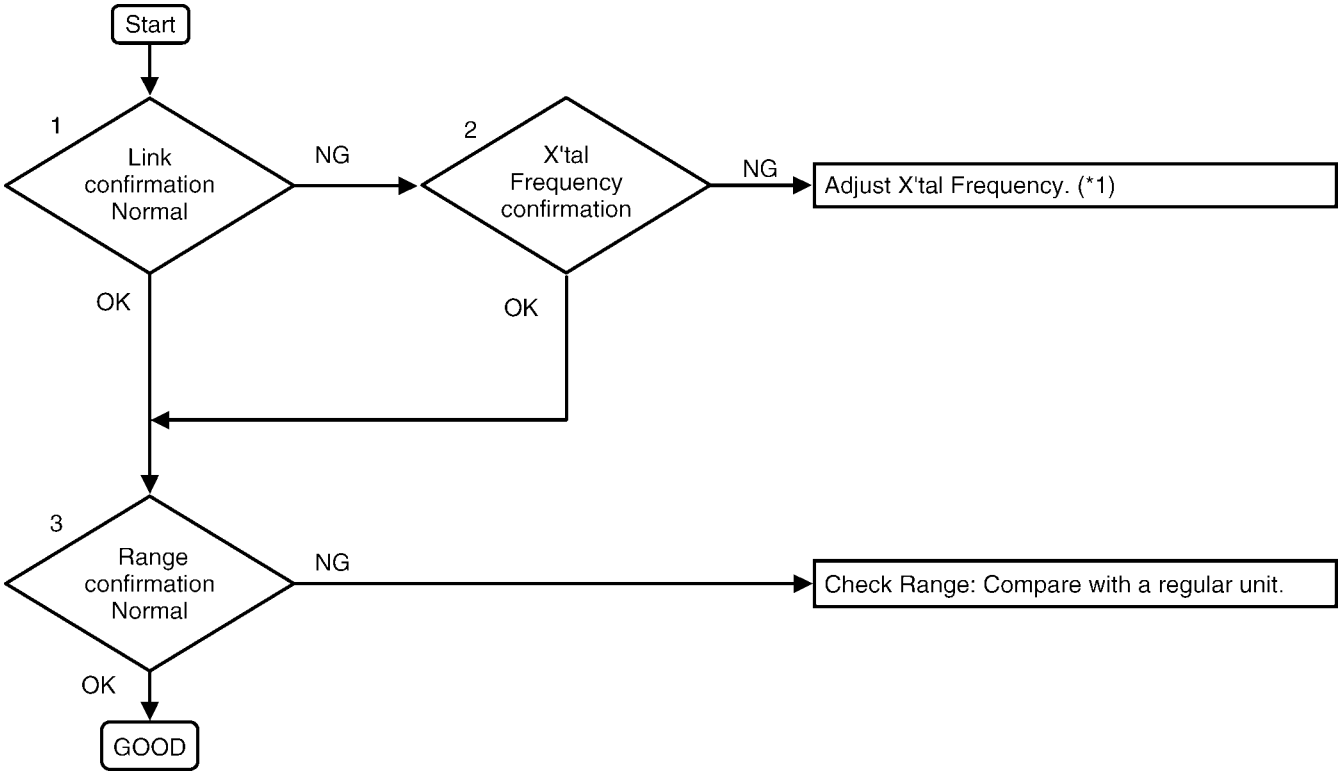

Note:

(*1) Base unit - refer to (G) of **Check Point (Base Unit)** (P.35)
Handset - refer to (H) of **Check Point (Handset)** (P.39)

9.1.4.3. Check Table for RF part

No.	Item	BU (Base Unit) Check	HS (Handset) Check
1	Link Confirmation Normal HS, BU Mode: [Normal mode]	1. Register Regular HS to BU (to be checked). 2. Press [Talk] key of the Regular HS to establish link.	1. Register HS (to be checked) to Regular BU. 2. Press [Talk] key of the HS to establish link.
2	X'tal Frequency confirmation	1. Check X'tal Frequency. (*1) (10.368 MHz ± 100 Hz)	1. Check X'tal Frequency. (*2) (10.368 MHz ±100Hz)
3	Range Confirmation Normal HS, BU Mode: [Normal mode]	1. Register Regular HS to BU (to be checked). 2. Press [Talk] key of the Regular HS to establish link. 3. Compare the range of the BU (being checked) with that of the Regular BU.	1. Register HS (to be checked) to Regular BU. 2. Press [Talk] key of the HS to establish link. 3. Compare the range of the HS (being checked) with that of the Regular HS.

Note:

(*1) Refer to **Adjustment Standard (Base Unit)** (P.49)

(*2) Refer to **Adjustment Standard (Handset)** (P.53)

9.1.5. Check Handset Transmission

Check MIC of Handset.

↓ OK

Check CDL TX (HANDSET) in **Signal Route**.

Cross Reference:

Signal Route (P.14)

9.1.6. Check Handset Reception

Check Handset Speaker in **How to check the Handset Speaker or Receiver**.

↓ OK

Check CDL RX (HANDSET) in **Signal Route**.

Cross Reference:

How to Check the Handset Speaker or Receiver (P.57).

Signal Route (P.14)

9.1.7. Check Caller ID

Check Caller ID in **Signal Route**.

Cross Reference:

Signal Route (P.14)

9.1.8. Bell Reception

9.1.8.1. Base Unit

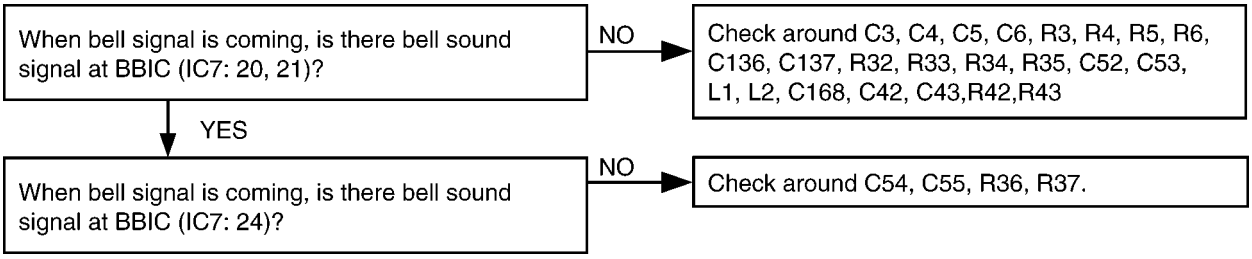

9.1.8.2. Handset

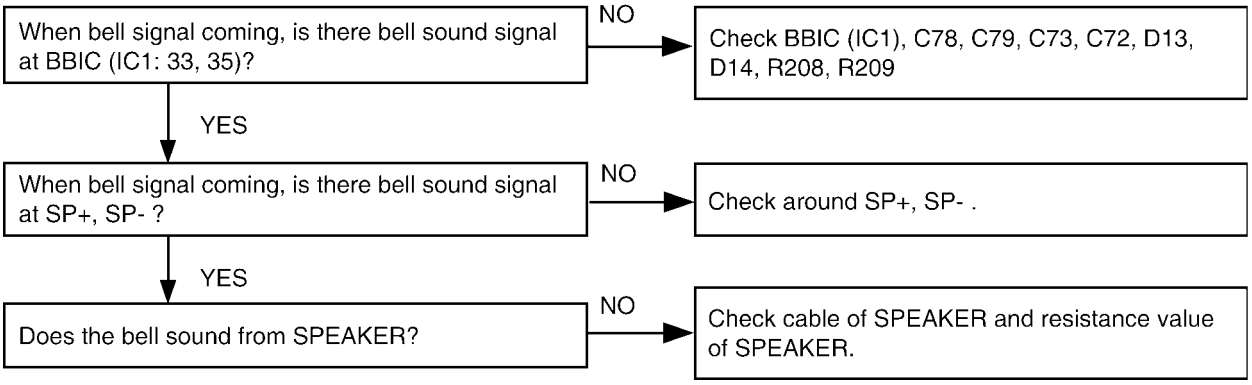

Cross Reference:

Telephone Line Interface (P.10)
Check Link (P.26)
How to Check the Handset Speaker or Receiver (P.57)

9.2. Troubleshooting by Symptom (Base Unit and Charger Unit)

If your unit has below symptoms, follow the instructions in remedy column. Remedies depend on whether you have DECT tester (*1) or not.

Symptom	Remedy (*2)	
	You don't have DECT Tester.	You have DECT Tester. (Model Number : CMD60)
You cannot dial.	Check item (**A**)-(**I**),(**S**).	Check item (**A**)-(**I**), (**J**)-(**P**),(**S**).
You cannot hear the caller's voice.	Check item (**A**)-(**G**),(**Q**),(**S**).	Check item (**A**)-(**G**), (**J**)-(**P**), (**Q**),(**S**).
You cannot use handset a little away from base unit even if the handset is within range of the base unit.	-	Check item (**J**)-(**P**).
The acoustic transmit level is high or low.	Check item (**Q**).	Check item (**Q**).
The acoustic reception level is high or low.	Check item (**Q**).	Check item (**Q**).
Base unit and handset do not link each other.	Check item (**A**)-(**I**).	Check item (**A**)-(**P**).
The unit cannot charge.	Check item (**R**).	Check item (**R**).
TAM does not work.	Check item (**R**).	Check item (**R**).

Note:

(*1) A general repair is possible even if you don't have the DECT tester because it is for confirming the levels, such as Acoustic level in detail.

(*2) Refer to **Check Point (Base Unit)** (P.35)

9.2.1. Check Point (Base Unit)

Please follow the items below when BBIC or EEPROM or FLASH is replaced.

Note:

After the measuring, suck up the solder of TP.

*: **The Setting Method of JIG (Base Unit)** (P.47) is required beforehand.

The connections of simulator equipment are as shown in **Adjustment Standard (Base Unit)** (P.49).

	Items	Check Point	Procedure	Check or Replace Parts
(**A**)	3.0 V Supply Confirmation	VDD3	1. Confirm that the voltage between test point VDD3 and GND is 3.0 V ± 0.2 V.	IC2, IC3, C32, C36, C86, C87, C88, R91, R92, R93, R95, D10, Q10, L3
(**B**)	1.8 V Supply Confirmation	VDD1	1. Confirm that the voltage between test point VDD1 and GND is 1.8 V ± 0.02 V. 2. Execute the command "VDD", then check the current value. 3. Adjust the 1.8V voltage of VDD1 executing command "VDD XX"(XX is the value).	Q8, C75, C614, C61, IC7
(**C**)	Charge Pump 2.5V Supply Confirmation	VDD5	1. Confirm that the voltage between test point VDD5 and GND is 2.5 V ± 0.3 V.	IC7,C625,C631
(**D**)	Charge Pump 3.0V Supply Confirmation	VDD4	1. Confirm that the voltage between test point VDD4 and GND is 3.0 V ± 0.2 V.	IC7,C616,C630
(**E**)*	BBIC Confirmation	-	1. BBIC Confirmation (Execute the command "getchk"). 2. Confirm the returned checksum value. Connection of checksum value and program number is shown below. ex.) checksum value: 357D; program number: DBQ1EN	IC7, X1, R77, RA80
(**F**)*	EEPROM Confirmation	-	1. EEP-ROM Confirmation (Execute the command "sendchar EPV"). 2. Confirm the returned Value(Value for reference is written at "EEPROM C/SUM" in Software_Version_Table.xls).	IC7, RA402, C51, R657, IC401
(**G**)*	BBIC Clock Adjustment	CLK	1. Input Command " sendchar WWD ff 48 IC 8006" 2. Confirm that the voltage between testpoint VDD4 and GND is less than 1.0 V. 3. Input Command " sendchar sfr", then you can confirm the current value. 4. Check X'tal Frequency. (10.368 MHz ± 100 Hz). 5. If the frequency is not 10.368MHz ± 100Hz, adjust the frequency of CLK executing the command "sendchar sfr xx xx (where xx is the value)" so that the reading of the frequency counter is 10.368000 MHz ± 5 Hz.	X1, IC7, R430, C305

	Items	Check Point	Procedure	Check or Replace Parts
(**H**)*	Hookswitch Check with DC Characteristics	-	1. Connect Telephone Socket to Tel-simulator which is connected with 600 Ω. 2. Set line voltage to 48 V and line current to 40mA at off-hook condition of normal telephone. 3. Execute the command “hookoff” 4. Confirm that the line current is 40 mA ± 5 mA. 5. Execute the command “hookon”. 6. Confirm that the line current is less than + 0.8 mA.	L1, L2, Q3, R14, R15, Q4, R16, R17, D3, R18~R24, C15~C17, D21, Q5, R27, IC7
(**I**)	DTMF Generator Check	-	1. Connect Telephone Socket to DTMF tester. (Load=600 Ω) 2. Link Handset and push dial key. 3. Confirm DTMF character. 4. Confirm that the high Group is -3.0 ± 2. 5. Confirm that the low Group is -6.0 ± 2.	IC7, R116, C141, R29, C22, C23, Q5, D21
(**J**)*	Transmitted Power Confirmation	- ANTI_TP	Remove the Antenna before starting step from 1 to 7. 1. Configure the DECT tester (CMD60) as follows; <Setting> • Test mode: FP • Traffic Carrier: 5 • Traffic Slot: 4 • Mode: Loopback • PMID: 00000 • RF LEVEL = -70 dBm. 2. Execute the command ”sendchar TST”. 3. Execute the command “sendchar dmv 2 2”. 4. Check that “Signalling Status” has been set to “Locked”, then press “ACCEPT RFPI”. 5. Initiate connection from Dect tester (“set up connect”) 6. Execute the command “ANT1”. 7. Confirm that the NTP value at ANT is 19.0 dBm ~ 25.0 dBm.	IC7, C802~C806, C808~C814, C820, C819, C822, C823, C825, C827, C826, C834, C851, C853, C859~C861, DA801, DA802, IC801, L801~L803, C855~C858, R801~R807, R106, R109, Q9, C617
(**K**)*	Modulation Check	- ANTI_TP	Follow steps 1 to 6 of **(J)**. 7.Confirm that the B-Field Modulation is -370 ± 30/ +370± 30 kHz/div & Modulated width ≧ 690 kHz using data type Fig31.	IC7, C802~C806, C808~C814, C820, C819, C822, C823, C825, C827, C826, C834, C851, C853, C859~C861, DA801, DA802, IC801, L801~L803, C855~C858, R801~R807, R106, R109, Q9, C617
(**L**)*	Frequency Offset Check	- ANTI_TP	Follow steps 1 to 6 of **(J)**. 7.Confirm that the frequency offset is < ± 50 kHz.	IC7, C802~C806, C808~C814, C820, C819, C822, C823, C825, C827, C826, C834, C851, C853, C859~C861, DA801, DA802, IC801, L801~L803, C855~C858, R801~R807, R106, R109, Q9, C617

	Items	Check Point	Procedure	Check or Replace Parts
(**M**)*	Frequency Drift Confirmation	- ANTI_TP	Follow steps 1 to 6 of **(J)**. 7.Confirm that the frequency drift is < ± 35 kHz/ms.	IC7, C802~C806, C808~C814, C820, C819, C822, C823, C825, C827, C826, C834, C851, C853, C859~C861, DA801, DA802, IC801, L801~L803, C855~C858, R801~R807, R106, R109, Q9, C617
(**N**)*	Sensitivity Receiver Confirmation	- ANTI_TP	Follow steps 1 to 6 of **(J)**. 7.Set DECT tester power to -90 dBm. 8.Confirm that the BER is < 1000 ppm.	IC7, C802~C806, C808~C814, C820, C819, C822, C823, C825, C827, C826, C834, C851, C853, C859~C861, DA801, DA802, IC801, L801~L803, C855~C858, R801~R807, R106, R109, Q9, C617
(**O**)*	Timing Confirmation	- ANTI_TP	Follow steps 1 to 6 of **(J)**. 7.Confirm that the Timing accuracy is • ± 5.0 ppm (When adjust the frequency of CLK in item **(G)**). • ± 15 ppm (When do not adjust the frequency of CLK in item **(G)**).	IC7, C802~C806, C808~C814, C820, C819, C822, C823, C825, C827, C826, C834, C851, C853, C859~C861, DA801, DA802, IC801, L801~L803, C855~C858, R801~R807, R106, R109, Q9, C617
(**P**)*	Power RAMP Confirmation	-	Follow steps 1 to 6 of **(J)**. 7.Confirm that Power RAMP is matching.	IC7, C802~C806, C808~C814, C820, C819, C822, C823, C825, C827, C826, C834, C851, C853, C859~C861, DA801, DA802, IC801, L801~L803, C855~C858, R801~R807, R106, R109, Q9, C617

	Items	Check Point	Procedure	Check or Replace Parts
(**Q**)	Audio Check	-	1. Link with Handset which is connected to Line Simulator. 2. Set line voltage to 48V and line current to 50mA. 3. Input -45dBm(600.)/1kHz to MIC of Handset. Measure the Level at Line I/F and distortion level. 4. Confirm that the level is -2.5dBm ± 2 dBm and that the distortion level is <5% at TEL Line (600. Load). 5. Input -23dBm(600.)/1kHz to Line I/F. Measure the Level at Receiver of Handset and distortion level (Receive volume set to second position from minimum). 6. Confirm that the level is -22 dBm ± 2 dBm and that the distortion level is < 5% at Receiver (150. Load).	IC7, SA1, L1, L2, D3, Q3, Q4, R14, R15, R16, R17, D21, Q5, R19, R20, C14, C56, R117, R116, C141, R9, C22, C23
(**R**)	Charging Check	-	1. Connect Charge Contact 12 Ω/2 W resistor between charge+ and charge-. 2. Measure and confirm voltage across the resistor is 3.3V ± 0.3V.	R55, R56, D22, D23, D24, C623, C624
(**S**)	2.4V Supply Confirmation VDD2	VDD2	1. Confirm that the voltage between test point VDD2 and GND is 2.5V ± 0.2V.	IC7, Q9, C617

9.2.2. Check Point (Charger Unit)

	Items	Check Point	Procedure	Check or Replace Parts
(**A**)	Charging Check	-	1. Connect Charge Contact 12Ω/2 W resistor between charge+ and charge-. 2. Measure and confirm voltage across the resistor is 3.1 V ± 0.3 V.	R1, F1

Note:

After the measuring, suck up the solder of TP.

The connection of adjustment equipment is as shown in **Adjustment Standard (Charger Unit)** (P.50).

9.3. Troubleshooting by Symptom (Handset)

If your unit has below symptoms, follow the instructions in remedy column. Remedies depend on whether you have DECT tester (*1) or not.

Symptom	Remedy (*2)	
	You don't have DECT Tester.	You have DECT Tester. (Model Number : CMD60)
Battery strength is not indicated correctly by Battery icon.	Check item (**A**)-(**D**), (**E**)-(**G**).	Check item (**A**)-(**D**), (**E**)-(**G**).
You cannot hear the caller's voice.	Check item (**A**)-(**C**), (**H**), (**O**).	Check item (**A**)-(**C**), (**H**)-(**M**), (**O**).
You cannot use handset a little away from base unit even if the handset is within range of the base unit.	-	Check item (**I**), (**N**).
Does not link between base unit and handset.	Check item (**A**)-(**C**), (**H**).	Check item (**A**)-(**C**), (**I**)-(**N**).
The Audio level is high or low.	Check item (**O**).	Check item (**O**).
The SP-Phone level is high or low.	Check item (**P**).	Check item (**P**).

Note:

(*1) A general repair is possible even if you don't have the DECT tester because it is for confirming the levels, such as Acoustic level in detail.

(*2) Refer to **Check Point (Handset)** (P.39)

9.3.1. Check Point (Handset)

Please follow the items below when BBIC or EEPROM is replaced.

Note:

After the measuring, suck up the solder of TP.

*: **Connections** (P.51) is required beforehand.

The connections of adjustment equipment are as shown in **Adjustment Standard (Handset)** (P.53).

	Items	Check Point	Procedure	Check or Replace Parts
(**A**)*	1.8 V Supply Adjustment	VDD1	1. Confirm that the voltage between test point VDD1 and GND is 1.8 V ± 0.02 V. 2. Execute the command "VDD", then check the current value. 3. Adjust the 1.8V voltage of VDD1 executing command "VDD XX"(XX is the value).	IC1, Q2, C48, D1, C1, C44, R45, C40, C45, F1
(**B**)*	BBIC Confirmation	-	1. BBIC Confirmation (Execute the command "getchk"). 2. Confirm the returned checksum value. Connection of checksum value and program number is shown below. ex.) checksum value: 2D82; program number: DBU2RN	IC1, X1, RA61, R64, R66
(**C**)*	EEP-ROM Confirmation	-	1. EEP-ROM Confirmation (Execute the command "sendchar EPV"). 2. Confirm the returned Value (Value for reference is written at "EEPROM C/SUM" in Software_Version_Table.xls).	IC1, IC3, RA40, C172
(**D**)	Charge Control Check & Charge Current Monitor Check	-	1. Apply 3.5 V between CHG(+) and CHG(-) with DC power supply and set current limit to 250 mA. Confirm the indication of "charging" on LCD. 2. Confirm that the current limit LED of DC power supply is ON/OFF. Confirm it after waiting over 1 minute at least. 3. Decrease current limit of DC power supply to 100 mA. 4. Confirm that the current limit LED of DC power supply is stable. (Current limiter is ON.) (If charge control cannot be confirmed by this procedure, please use battery to handset power supply and try again.)	IC1, Q4 Q9, D7, R6, R7, F1, C1, R2, R30, R31, R8, R45
(**E**)*	Charge Detection (OFF) Check	-	1. Stop supplying 3.5 V to CHG (+) and CHG (-). 2. Confirm the indication of "charging" has been cleared.	IC1, Q4 Q9, D7, R6, R7, F1, C1, R2, R30, R31, R8, R45

	Items	Check Point	Procedure	Check or Replace Parts
(**F**)*	Battery Monitor Check	-	1. Apply 2.25 V between BATT+ and BATT-. 2. Execute the command sendchar PAD sendchar LED 0 sendchar CRX 0 1 sendchar AD1 It assumes that the return value is XX. a) 6c ≤ XX ≤ 71: No need to adjust b) XX: 6A ~ 6B: Need to adjust XX: 72 ~ 74: Need to adjust Write AD value of 2.25 V to EEPROM. ex) read data: XX = 6A, write data: YY = 6A read data: XX = 73, write data: YY = 73 EEPROM = 0009(Low Voltage) write “YY” Execute the command “wreeprom 00 09 01 YY”. EEPROM = 000A(No Voltage) write ‘’YY - 1D’’ Execute the command “×wreeprom 00 0A 01 ZZ”. **Note:** ZZ = YY - 1D No Voltage writing data limit is ‘00’. c) XX: 00 ~ 69: Reject XX: 75 ~ FF: Reject	IC1, F1, C1, R45
(**G**)	Battery Low Confirmation	-	1. Apply 2.40 V between BATT+ and BATT-. 2. Confirm that there is no flashing of Battery Icon. 3. Apply 2.25 V ± 0.08 V between BATT+ and BATT-. 4. Confirm that there is flashing of Battery Icon.	IC1, F1, C1, R45
(**H**)*	BBIC Clock Adjustment	CLK	1. Apply 2.6 V between BATT+ and BATT- with DC power. 2. Input Command “sendchar sfr”, then you can confirm the current value. 3. Check X’tal Frequency. (10.368 MHz ± 100 Hz). 4. If the frequency is not 10.368 MHz ± 100 Hz, adjust the frequency of CLK executing the command “sendchar sfr xx xx (where xx is the value)” so that the reading of the frequency counter is 10.368000 MHz ± 5 Hz. Note: Clear the registered information for Base Unit before measurement, because the Frequency will not possibly get stable due to the registered information. Pressing the button of "3" "5" "7" "#" clears the registration. Register to it on Base Unit after measurement.	IC1, X1, C47
(**I**)*	Transmitted Power Confirmation	-	Remove the Antenna before starting step from 1 to 4. 1. Configure the DECT tester (CMD60) as follows; <Setting> • Test mode: PP • RFPI: 0102030405 • Traffic Carrier: 5 • Traffic Slot: 4 • Mode: Loopback • RF LEVEL = -70 dBm • PACKET: PP32Z 2. Execute the command “sendchar TST 01 02 03 04 05". 3. Initiate connection from DECT tester. 4. Confirm that the NTP value at ANT is 19 dBm ~ 25 dBm.	IC1, C802~C806, C808~C814, C819~C820, C822, C825~C827, C834, C860~C864, L801~L804, DA801, R801~R808
(**J**)*	Modulation Check	-	Follow steps 1 to 3 of **(K)**. 4.Confirm that the B-Field Modulation is -370±30/ +370±30 kHz/div & Modulated width ≧ 690 kHz using data type Fig 31.	IC1, C802~C806, C808~C814, C819~C820, C822, C825~C827, C834, C860~C864, L801~L804, DA801, R801~R808

	Items	Check Point	Procedure	Check or Replace Parts
(**K**)*	Frequency Offset Confirmation	-	Follow steps 1 to 3 of **(I)**. 4.Confirm that the frequency Offset is < ± 50 kHz.	IC1, C802~C806, C808~C814, C819~C820, C822, C825~C827, C834, C860~C864, L801~L804, DA801, R801~R808
(**L**)*	Frequency Drift Confirmation	-	Follow steps 1 to 3 of **(I)**. 4.Confirm that the frequency Drift is < ± 35 kHz/ms.	IC1, C802~C806, C808~C814, C819~C820, C822, C825~C827, C834, C860~C864, L801~L804, DA801, R801~R808
(**M**)*	Sensitivity Receiver Confirmation	-	Follow steps 1 to 3 of **(I)**. 4.Set DECT tester power to -88 dBm. 5.Confirm that the BER is < 1000 ppm.	IC1, C802~C806, C808~C814, C819~C820, C822, C825~C827, C834, C860~C864, L801~L804, DA801, R801~R808
(**N**)*	Power RAMP Confirmation	-	Follow steps 1 to 3 of **(I)**. 4.Confirm that Power RAMP is matching.	IC1, C802~C806, C808~C814, C819~C820, C822, C825~C827, C834, C860~C864, L801~L804, DA801, R801~R808
(**O**)	Audio Check and Confirmation	-	1. Link to BASE which is connected to Line Simulator. 2. Set line voltage to 48V and line current to 50mA. 3. Input -45dBm(600.)/1kHz to MIC of Handset. Measure the Level at Line I/F and distortion level. 4. Confirm that the level is -2.5dBm ± 2 dBm and that the distortion level is <5% at TEL Line (600. Load). 5. Input -23dBm(600.)/1kHz to Line I/F. Measure the Level at Receiver of Handset and distortion level (Receive volume set to second position from minimum). 6. Confirm that the level is -22dBm ± 2 dBm and that the distortion level is <5% at Receiver (150. Load).	IC1, C12, C96, C97, R215, R27, RA4, C11, C13, R28, D3, D4, MIC, R73, R74
(**P**)	SP phone Audio Check and Confirmation	-	1. Link to Base which is connected to Line Simulator. 2. Set line voltage to 48V and line current to 50mA. 3. Set the handset off-hook using SP-Phone key. 4. Input -23 dBm(600.)/1KHz to Line I/F and measure Receiving level at SP+ and SP-. 5. Confirm that the level is -11.0 dBm ± 2 dBm and that the distortion level is < 5%. (vol = 3)	IC1, C12, C73, D13, D14, R73, R74, MIC, C11, C13, RA4, R27, R28, C96, C97, R215, C72
(**Q**)	Charge Pump 3.0V Supply Confirmation	CP3.0V	1. Confirm that the voltage between testpoint CP3.0V and GND is 3.0 ± 0.3.	C49, C52~C54
(**R**)	Charge Pump 4.0V Supply Confirmation	CP4.0V	1. Confirm that the voltage between testpoint CP4.0V and GND is 4.0V ± 0.3V.	C50, C51, C55

9.3.2. Troubleshooting for Speakerphone

When the customer's telephone line corresponds to the following conditions, and the transmission signal of SP-Phone is interrupted, performing the next set up to a cordless handset will improve it to some extent.

Conditions

1. When customer's line has less line loss.
   ex.) The customer is using optical fiber, ISDN terminal adaptor, or PBX.
   In this case, receiving signal is strong and it may affect transmission signal.
2. When the other party is talking from noisy place.
   ex.) The other party is using cellular phone. The background noise is very loud.
   In this case, the noise from the other party (i.e. surrounding noise) may affect transmission signal.

Setting Method

- Change the handset address of EEPROM (0129) from 00 to 01 by **Engineering Mode**.

10 Disassembly and Assembly Instructions

10.1. Disassembly Instructions

10.1.1. Base Unit

① **Remove the 2 screws to remove the cabinet cover.**

② **Remove the solders and tapes.**

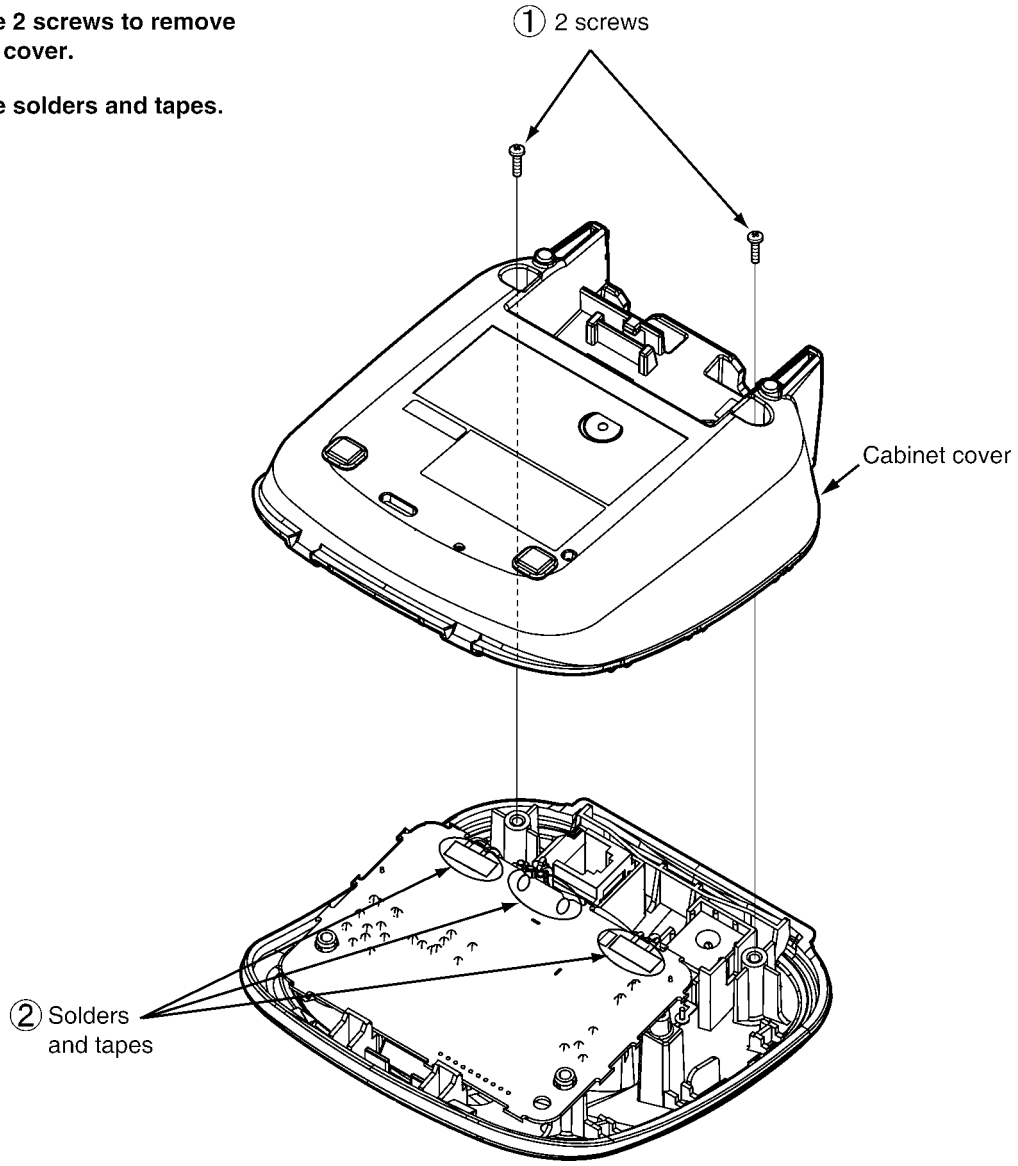

10.1.2. Handset

① **Remove the 2 screws.**

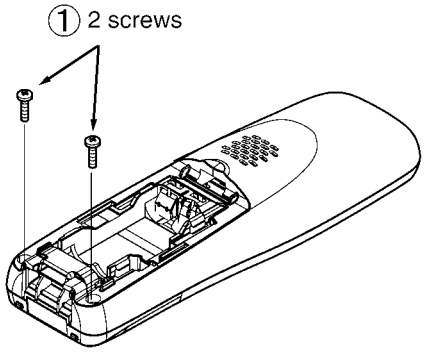

② **Insert a JIG (PQDJ10006Y) between the cabinet body and the cabinet cover, then pull it along the gap to open the cabinet.**

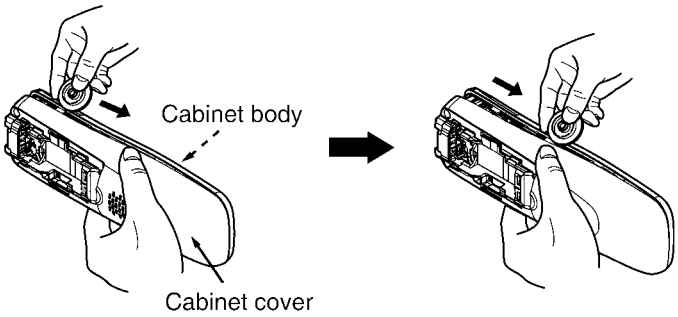

③ **Likewise, open the other side of the cabinet.**

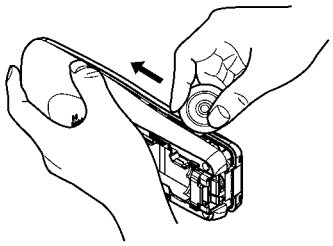

④ **Remove the cabinet cover by pushing it upward.**

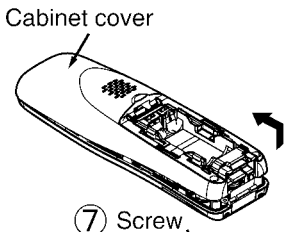

⑤ **Remove the solders and tape.**

⑥ **Remove the 2 screws to remove the 2 charge terminals.**

⑦ **Remove the screw to remove the main P. C. board.**

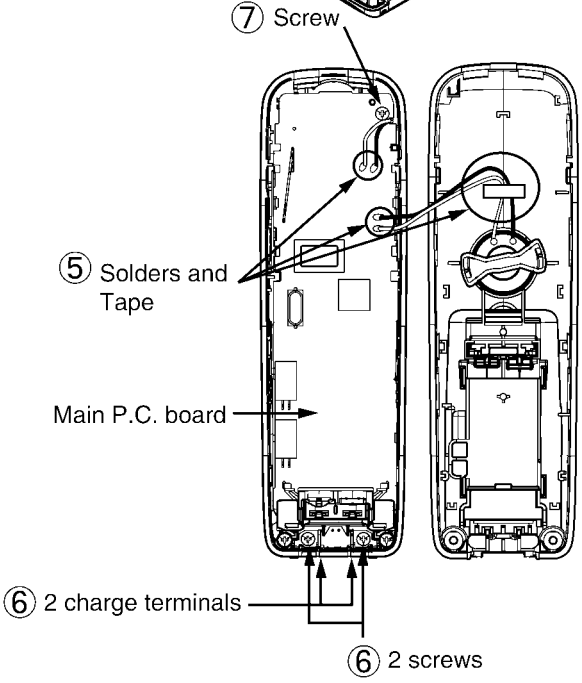

10.1.3. Charger Unit

① **Remove the screw to remove the cabinet cover.**

② **Remove the solders to remove the 2 charge terminals.**

③ **Remove the screw to remove the main P. C. board.**

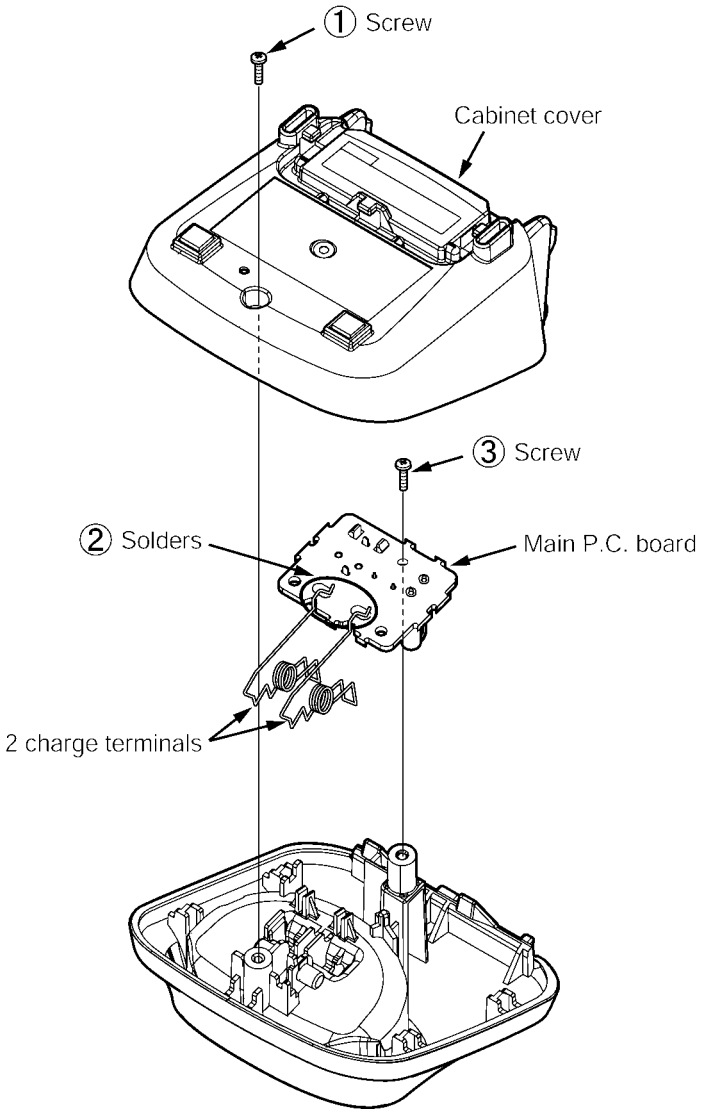

10.2. How to Replace the Handset LCD

Note:

The illustrations are simplified in this page.
They may differ from the actual product.

①

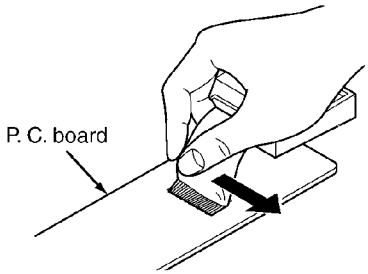

Peel off the FFC (Flexible Flat Cable) from the LCD, in the direction of the arrow. Take care to ensure that the foil on the P.C. board is not damaged.

②

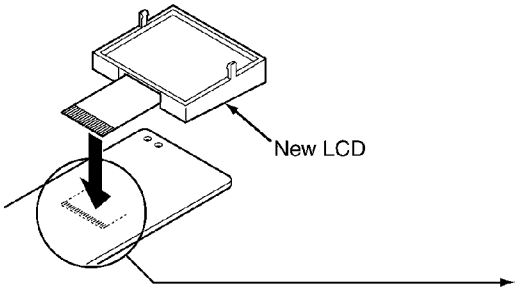

Fit the heatseal of a new LCD.

③

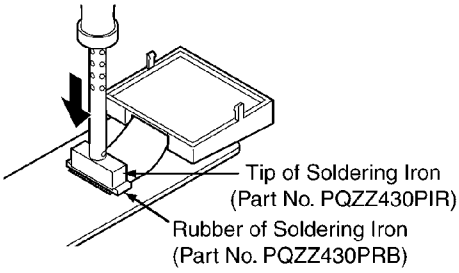

Heatweld with the tip of the soldering iron about 5 to 8 seconds (in case of 60W soldering iron).

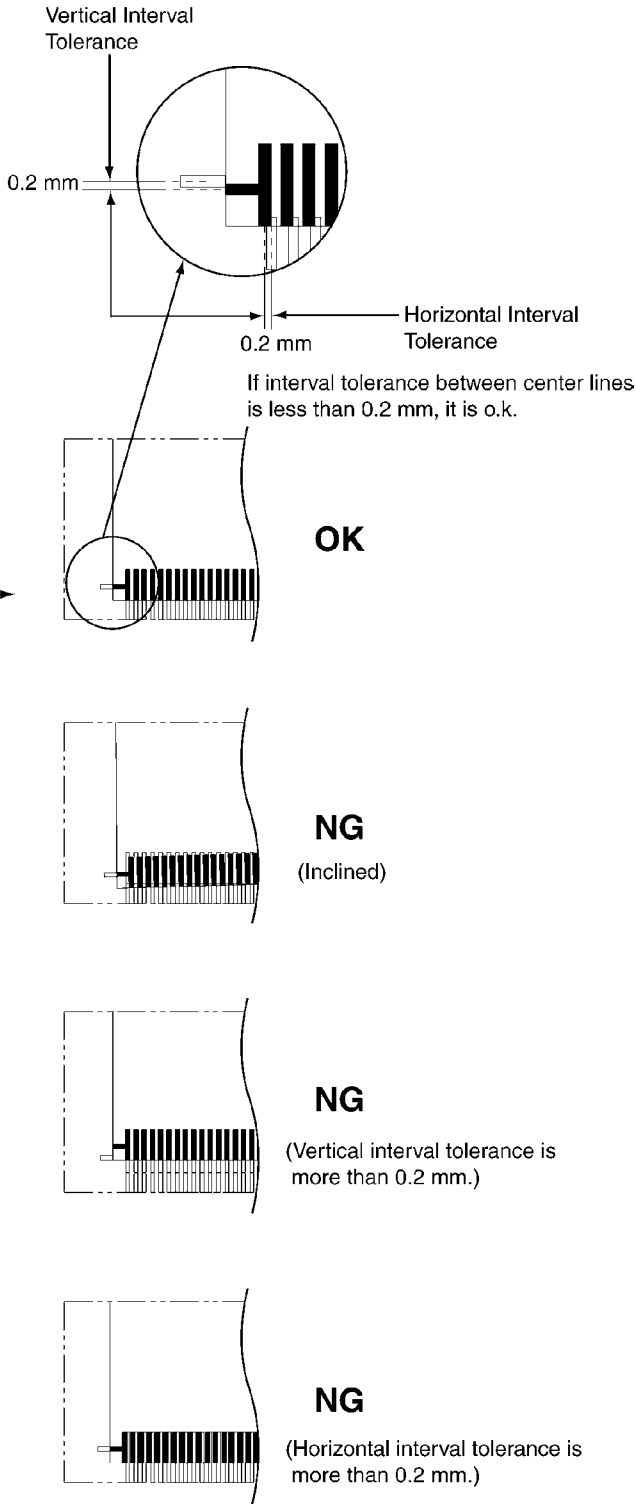

11 Measurements and Adjustments

This chapter explains the measuring equipment, the JIG connection, and the PC setting method necessary for the measurement in **Troubleshooting Guide** (P.23)

11.1. Equipment Required

- Digital multi-meter (DMM): it must be able to measure voltage and current.
- Oscilloscope.
- Frequency counter: It must be precise enough to measure intervals of 1 Hz (precision; ±4 ppm)
  Hewlett Packard, 53131A is recommended.
- DECT tester: Rohde & Schwarz, CMD 60 is recommended.
  This equipment may be useful in order to precisely adjust like a mass production.

11.2. The Setting Method of JIG (Base Unit)

This section explains the PC setting to use command required in **Check Point (Base Unit)**(P.35).

<Preparation>
- Serial JIG cable: PQZZ1CD300E*
- PC which runs in DOS mode
- **Batch file CD-ROM** for setting: PNZZTG2511CA

(PQZZ1CD505E), change the following values of resistance. Then you can use it as a JIG Cable for both TCD300 and TCD500 series. (It is an upper compatible JIG Cable.)

Resistor	Old value (kΩ)	New value (kΩ)
R2	22	3.3
R3	22	3.3
R4	22	4.7
R7	4.7	10

Note:
*: If you have the JIG Cable for TCD500 series

11.2.1. Connections

① Connect the AC adaptor to DC-JACK (base unit).

② Connect the JIG Cable GND (black) to GND.

③ Connect the JIG Cable RX (red) to URX and TX (yellow) to UTX.

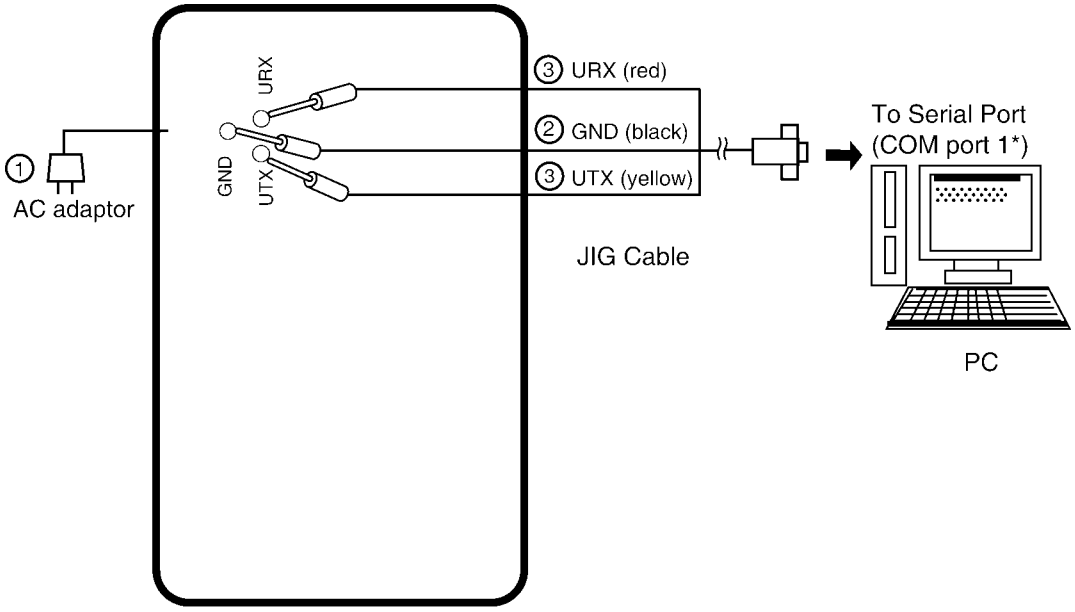

Base unit P. C. board

Note:
*: COM port names may vary depending on what your PC calls it.

11.2.2. How to install Batch file into P.C.

1. Insert the Batch file CD-ROM into CD-ROM drive and copy PNZZTG**** folder to your PC (example: D drive).

2. Open an MS-DOS mode window.

<Example for Windows>

On your computer, click **[Start]**, select **Programs** (**All Programs** for Windows XP/Windows Server 2003), then click
MS-DOS Prompt. (for Windows 95/Windows 98)
Or
Accessories-MS-DOS Prompt. (for Windows Me)
Or
Command Prompt. (for Windows NT 4.0)
Or
Accessories-Command Prompt.
(for Windows 2000/Windows XP/Windows Server 2003)

3. At the DOS prompt, type "**D:**" (for example) to select the drive, then press the **Enter** key.

4. Type "**CD ¥PNZZTG****"**, then press the **Enter** key.

5. Type "**SET_COM=X**", then press the **Enter** key
(**X**: COM port number used for the serial connection on your PC).

6. Type "**READID**", then press the **Enter** key.
- If any error messages appear, change the port number or check the cable connection.
- If any value appear, go to next step.

7. Type "**DOSKEY**", then press the **Enter** key.

<Example>

```
C: ¥Documents and Settings>D:
D: ¥>CD ¥PNZZTG****
D: ¥PNZZTG**** >SET_COM=X
D: ¥PNZZTG****>READID
00 52 4F A8 A8
D: ¥PNZZTG****>DOSKEY
D: ¥PNZZTG****>_
```

<Example: error happens>

```
C: ¥Documents and Settings>D:
D: ¥>CD ¥PNZZTG****
D: ¥PNZZTG**** >SET_COM=X
D: ¥PNZZTG****>READID
  CreateFile error
ERROR 10: Can't open serial port
D: ¥PNZZTG ****>_
```

Note:
- "*****" varies depending on the country or models.

11.2.3. Commands

See the table below for frequently used commands.

Command name	Function	Example
rdeeprom	Read the data of EEPROM	Type "rdeeprom 00 00 FF", and the data from address "00 00" to "FF" is read out.
readid	Read ID (RFPI)	Type "readid", and the registered ID is read out.
writeid	Write ID (RFPI)	Type "writeid 00 18 E0 0E 98", and the ID "0018 E0 0E 98" is written.
hookoff	Off-hook mode on Base	Type "hookoff".
hookon	On-hook mode on Base	Type "hookon".
getchk	Read checksum	Type "getchk".
wreeprom	Write the data of EEPROM	Type "wreeprom 01 23 45". "01 23" is address and "45" is data to be written.

11.3. Adjustment Standard (Base Unit)

When connecting the simulator equipment for checking, please refer to below.

11.3.1. Bottom View

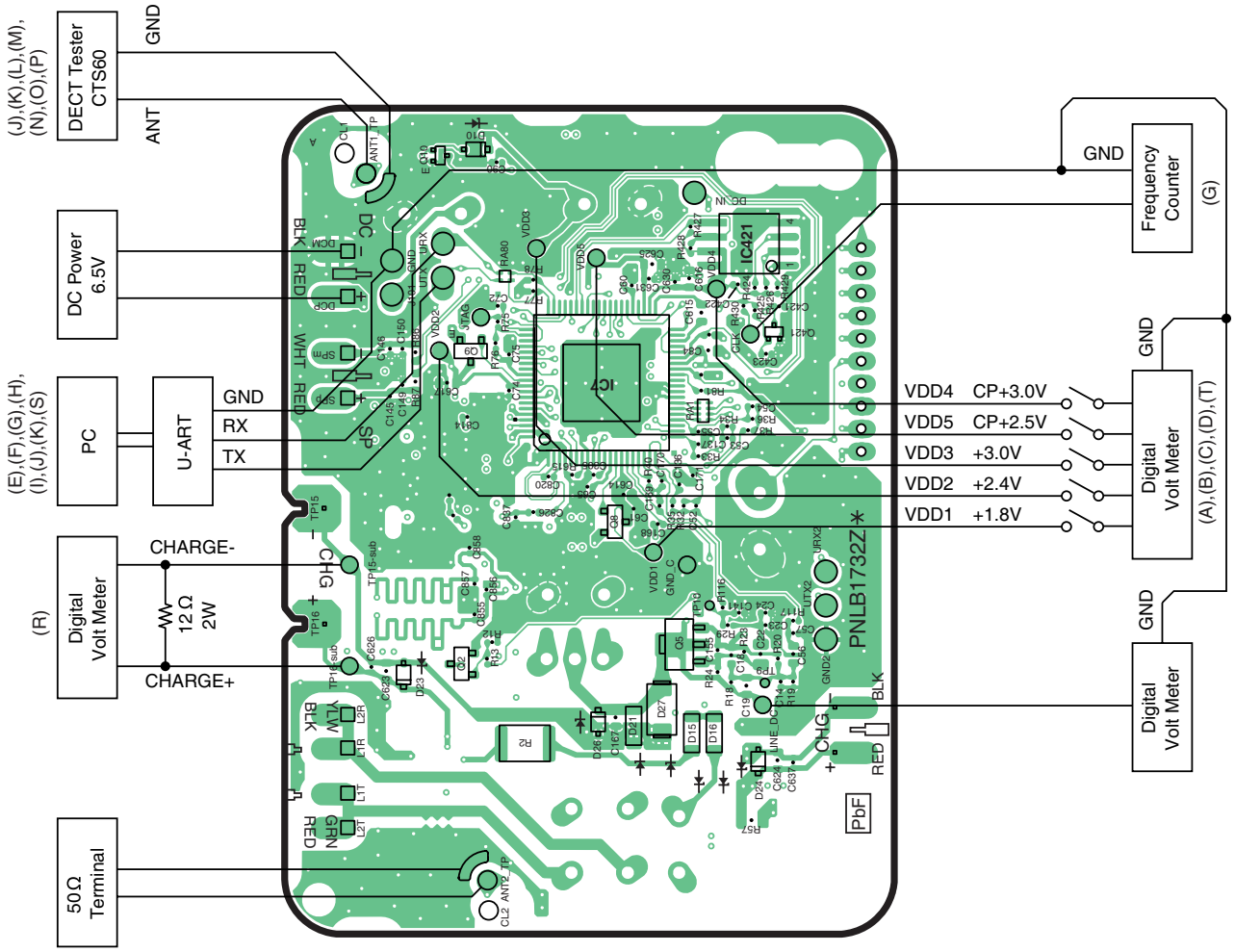

Note:

(**A**) - (**S**) is referred to **Check Point (Base Unit)** (P.35)

11.4. Adjustment Standard (Charger Unit)

When connecting the simulator equipment for checking, please refer to below.

11.4.1. Bottom View

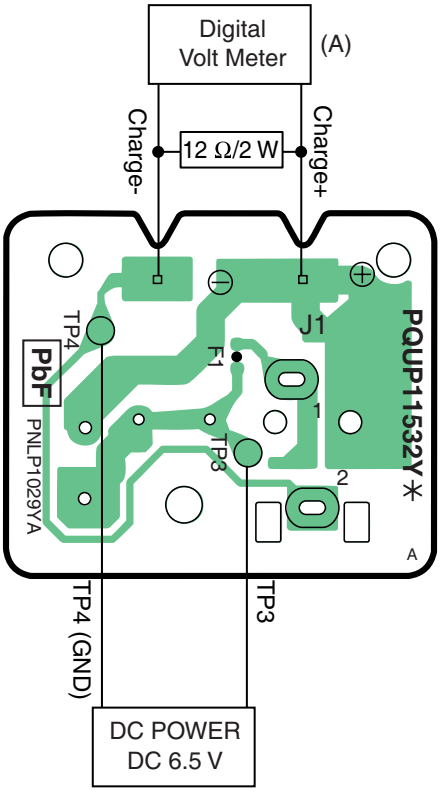

Note:

(**A**) is referred to **Check Point (Charger Unit)** (P.38)

11.5. The Setting Method of JIG (Handset)

This section explains the PC setting to use command required in **Check Point (Handset)**(P.39).

<Preparation>
- Serial JIG cable: PQZZ1CD300E*
- PC which runs in DOS mode
- **Batch file CD-ROM** for setting: PNZZTG2511CA

(PQZZ1CD505E), change the following values of resistance. Then you can use it as a JIG Cable for both TCD300 and TCD500 series. (It is an upper compatible JIG Cable.)

Resistor	Old value (kΩ)	New value (kΩ)
R2	22	3.3
R3	22	3.3
R4	22	4.7
R7	4.7	10

Note:
*: If you have the JIG Cable for TCD500 series

11.5.1. Connections

①Connect the DC Power or Battery to BATT+ and BATT-.

②Connect the JIG cable GND (black) to GND.

③Connect the JIG cable UTX (yellow) to UTX and URX (red) to URX.

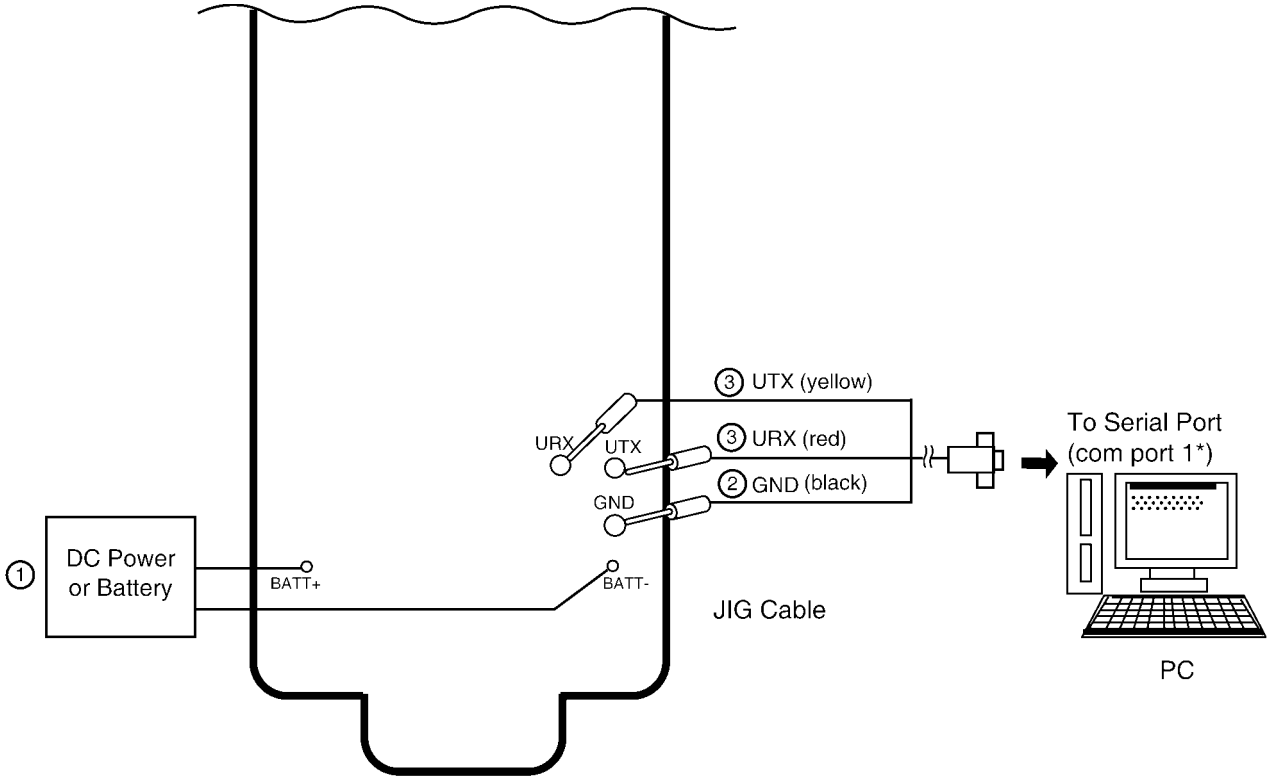

Handset P. C. board

Note:
*: COM port names may vary depending on what your PC calls it.

11.5.2. How to install Batch file into P.C.

1. Insert the Batch file CD-ROM into CD-ROM drive and copy PNZZTG***** folder to your PC (example: D drive).

2. Open an MS-DOS mode window.

<Example for Windows>

On your computer, click **[Start]**, select **Programs** (**All Programs** for Windows XP/Windows Server 2003), then click
MS-DOS Prompt. (for Windows 95/Windows 98)
Or
Accessories-MS-DOS Prompt. (for Windows Me)
Or
Command Prompt. (for Windows NT 4.0)
Or
Accessories-Command Prompt.
(for Windows 2000/Windows XP/Windows Server 2003)

3. At the DOS prompt, type "**D:**" (for example) to select the drive, then press the **Enter** key.

4. Type "**CD ¥PNZZTG*****"**, then press the **Enter** key.

5. Type "**SET RTX_COM=X**", then press the **Enter** key (**X**: COM port number used for the serial connection on your PC).

6. Type "**READID**", then press the **Enter** key.
- If any error messages appear, change the port number or check the cable connection.
- If any value appear, go to next step.

7. Type "**DOSKEY**", then press the **Enter** key.

<Example>

```
C: ¥Documents and Settings>D:
D: ¥>CD ¥PNZZTG*****
D: ¥PNZZTG***** >SET RTX_COM=X
D: ¥PNZZTG*****>READID
00 52 4F A8 A8
D: ¥PNZZTG*****>DOSKEY
D: ¥PNZZTG*****>
```

<Example: Error happens>

```
C: ¥Documents and Settings>D:
D: ¥>CD ¥PNZZTG*****
D: ¥PNZZTG***** >SET RTX_COM=X
D: ¥PNZZTG*****>READID
  CreateFile error
ERROR 10: Can't open serial port
D: ¥PNZZTG*****>
```

Note:
- "*****" varies depending on the country or models.

11.5.3. Commands

See the table below for frequently used commands.

Command name	Function	Example
rdeeprom	Read the data of EEPROM	Type "rdeeprom 00 00 FF", and the data from address "00 00" to "FF" is read out.
readid	Read ID (RFPI)	Type "readid", and the registered ID is read out.
writeid	Write ID (RFPI)	Type "writeid 00 18 E0 0E 98", and the ID "0018 E0 0E 98" is written.
getchk	Read checksum	Type "getchk".
wreeprom	Write the data of EEPROM	Type "wreeprom 01 23 45". "01 23" is address and "45" is data to be written.

11.6. Adjustment Standard (Handset)

When connecting the simulator equipment for checking, please refer to below.

11.6.1. Component View

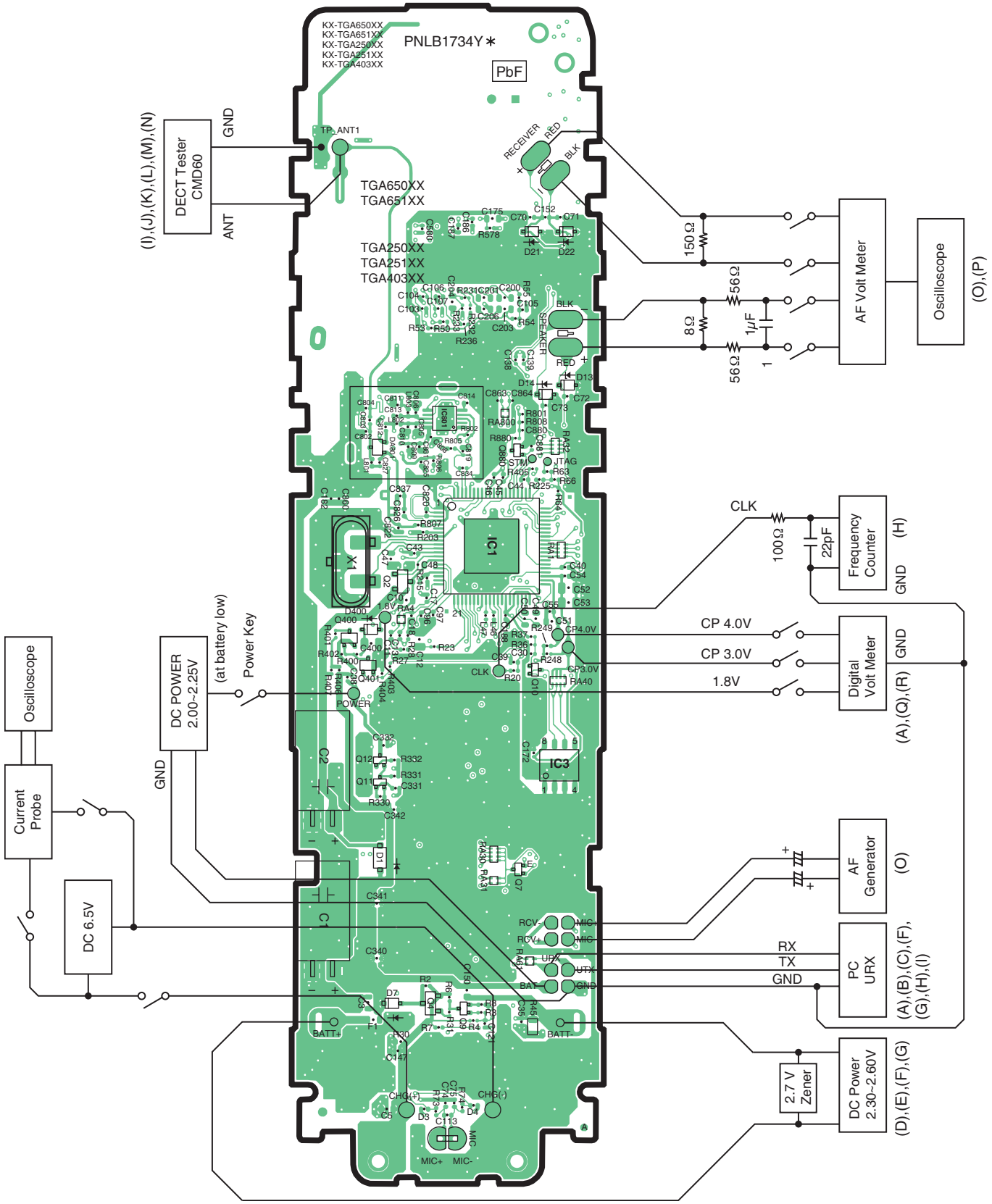

Note:

(**A**) - (**R**) is referred to **Check Point (Handset)** (P.39)

11.7. Things to Do after Replacing IC or X'tal

If repairing or replacing BBIC (FLASH type), EEPROM and X'tal, it is necessary to download the required data such as Programming data or adjustment data, etc in memory.
The set doesn't operate if it is not executed.

11.7.1. How to download the data

11.7.1.1. Base Unit

First, operate the PC setting according to **The Setting Method of JIG (Base Unit)(**P.47).
Then download the appropriate data according to the following procedures.

Items		How to download/Required adjustment
BBIC (FLASH type) (IC7)	Programming data is stored in memory.	1) Make sure to connect the JIG cable, then disconnect the DC Power in order to download the data. 2) Execute the command “flw480 *********.hex”. 3) Connect the DC Power. 4) Press the PC Enter key once. 5) After a few minutes, “Successful upgrade” is displayed on the PC indicating downloading has finished. 6) Detach the JIG cable, then disconnect the DC Power. 7) Connect the DC Power. 8) Connect the JIG cable again, and execute the command “getchk”, then confirm the checksum value is correct. • If the downloading fails, start again from step 1). 9) Default batch file: Execute the command “default.bat”. 10) Country version batch file: Execute the command “TG2511EUXXrevYY.bat”. (*1) 11) Clock adjustment: Refer to Check Point (G). (*2)
EEPROM (IC401)	Adjusted parameter data is stored in memory. (country version batch file, default batch file, etc.)	1) Change the address “0001” of EEPROM to “00” to download the data. 2) Default batch file: Execute the command “default.bat”. 3) Country version batch file: Execute the command “TG2511EUXXrevYY.bat”. (*1) 4) Clock adjustment: Refer to Check Point (G). (*2)
X'tal (X1)	System clock	Clock adjustment data is in EEPROM, adjust the data again after replacing it. 1) Refer to Check Point (F). (*2)

Note:

(*1) XX: country code, YY: revision number, ZZ: Voice Prompt
“XX”, “YY” and “ZZ” vary depending on the country version. You can find them in the batch file, PNZZ- mentioned in **The Setting Method of JIG (Base Unit)** (P.47).

(*2) Refer to **Check Point (Base Unit)** (P.35)

11.7.1.2. Handset

First, operate the PC setting according to **The Setting Method of JIG (Handset)(**P.51).
Then download the appropriate data according to the following procedures.

Items		How to download/Required adjustment
BBIC (FLASH type) (IC1)	Programming data is stored in memory.	1) Make sure to connect the JIG cable, then disconnect the DC Power in order to download the data. 2) Execute the command “flw480 *********.hex”. 3) Connect the DC Power. 4) Press and hold the handset Power key. 5) While holding down the handset Power key, press the PC Enter key once. 6) After a few minutes, “Successful upgrade” is displayed on the PC indicating downloading has finished. 7) Detach the JIG cable, then press the handset Power key to turn it on. 8) Connect the JIG cable again, and execute the command "getchk”, then confirm the checksum value is correct. • If the downloading fails, start again from step 1). 10) Default batch file: Execute the command “default.bat”. 11) Default batch file (remaining): Execute the command “TGA250RUDEFrevYY.bat”. (*3). 12) Country version batch file: Execute the command “TGA250RUXXrevYY.bat”. (*3). 13) Clock adjustment: Refer to Check Point (H). (*4). 14) 1.8 V setting and battery low detection: Refer to Check Point (A), (F) and (G). (*4).
EEPROM (IC3)	Adjusted parameter data is stored in memory. (country version batch file, default batch file, etc.)	1) Default batch file: Execute the command “default.bat”. 2) Default batch file (remaining): Execute the command “TGA250RUDEFrevYY.bat”. (*3) 3) Country version batch file: Execute the command “TGA250RUXXrevYY.bat”. (*3) 4) Clock adjustment: Refer to Check Point (H). (*4) 5) 1.8 V setting and battery low detection: Refer to Check Point (A), (F) and (G). (*4)
X'tal (X1)	System clock	Clock adjustment data is in EEPROM, adjust the data again after replacing it. 1) Refer to Check Point (C). (*4)

Note:

(*3) XX: country code, YY: revision number
“XX” and “YY” vary depending on the country version. You can find them in the batch file, PNZZ- mentioned in **The Setting Method of JIG (Handset)** (P.51).

(*4) Refer to **Check Point (Handset)** (P.39)

11.8. RF Specification

11.8.1. Base Unit

Item	Value	Refer to -. *
TX Power	19 dBm ~ 25 dBm	**Check Point (Base Unit) (J)**
Modulation	-370±30/+370±30 kHz/div & Modulated width ≧ 690 kHz	**Check Point (Base Unit) (K)**
Frequency Offset	-50 kHz ~ +50 kHz	**Check Point (Base Unit) (L)**
Frequency Drift	< ± 35 kHz / ms	**Check Point (Base Unit) (M)**
RX Sensitivity	< 1000 ppm	**Check Point (Base Unit) (N)**
Timing Accuracy	< ± 5.0 ppm/<±15.0ppm	**Check Point (Base Unit) (O)**
Power RAMP	Power RAMP is matching	**Check Point (Base Unit) (P)**

*: Refer to **Check Point (Base Unit)** (P.35)

11.8.2. Handset

Item	Value	Refer to -. **
TX Power	19 dBm ~ 25 dBm	**Check Point (Handset) (I)**
Modulation	-370±30/+370±30 kHz/div & Modulated width ≧ 690 kHz	**Check Point (Handset) (J)**
Frequency Offset	-50 kHz ~ +50 kHz	**Check Point (Handset) (K)**
Frequency Drift	< ± 35 kHz / ms	**Check Point (Handset) (L)**
RX Sensitivity	< 1000 ppm	**Check Point (Handset) (M)**
Power RAMP	Power RAMP is matching	**Check Point (Handset) (N)**

: Refer to **Check Point (Handset) (P.39)

11.9. How to Check the Handset Speaker or Receiver

1. Prepare the digital voltmeter, and set the selector knob to ohm meter.
2. Put the probes at the speaker terminals as shown below.

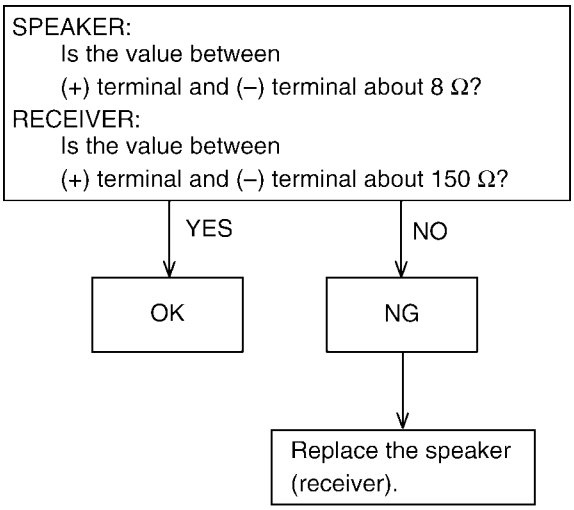

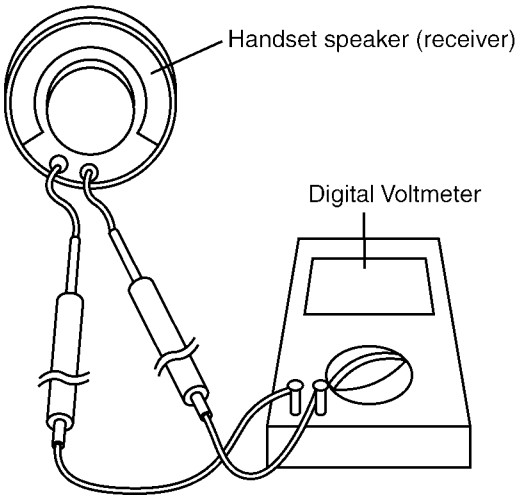

11.10. Frequency Table (MHz)

	BASE UNIT		HANDSET	
Channel No	**Transmit Frequency**	Receive Frequency	**Transmit Frequency**	**Receive Frequency**
1	1897.344	1897.344	1897.344	1897.344
2	1895.616	1895.616	1895.616	1895.616
3	1893.888	1893.888	1893.888	1893.888
4	1892.160	1892.160	1892.160	1892.160
5	1890.432	1890.432	1890.432	1890.432
6	1888.704	1888.704	1888.704	1888.704
7	1886.976	1886.976	1886.976	1886.976
8	1885.248	1885.248	1885.248	1885.248
9	1883.520	1883.520	1883.520	1883.520
10	**1881.792**	**1881.792**	**1881.792**	**1881.792**

Note:

Channel No. 10: In the Test Mode on Base Unit and Handset.

12 Miscellaneous

12.1. How to Replace the Flat Package IC

Even if you do not have the special tools (for example, a spot heater) to remove the Flat IC, with some solder (large amount), a soldering iron and a cutter knife, you can easily remove the ICs that have more than 100 pins.

12.1.1. Preparation

- PbF (: Pb free) Solder
- Soldering Iron
  Tip Temperature of 700 °F ± 20 °F (370 °C ± 10 °C)
  Note: We recommend a 30 to 40 Watt soldering iron. An expert may be able to use a 60 to 80 Watt iron where someone with less experience could overheat and damage the PCB foil.
- Flux
  Recommended Flux: Specific Gravity → 0.82.
  Type → RMA (lower residue, non-cleaning type)

Note: See **About Lead Free Solder (Pbf: Pb free)** (P.4)

12.1.2. How to Remove the IC

1. Put plenty of solder on the IC pins so that the pins can be completely covered.
   Note:
   If the IC pins are not soldered enough, you may give pressure to the P.C. board when cutting the pins with a cutter.

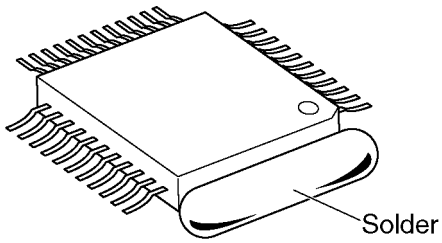

2. Make a few cuts into the joint (between the IC and its pins) first and then cut off the pins thoroughly.

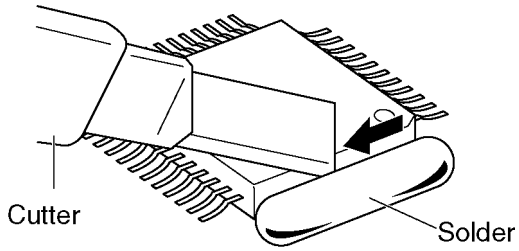

3. While the solder melts, remove it together with the IC pins.

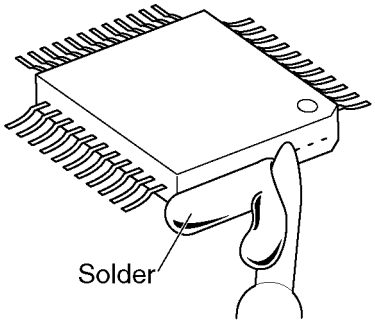

When you attach a new IC to the board, remove all solder left on the board with some tools like a soldering wire. If some solder is left at the joint on the board, the new IC will not be attached properly.

12.1.3. How to Install the IC

1. Temporarily fix the FLAT PACKAGE IC, soldering the two marked pins.

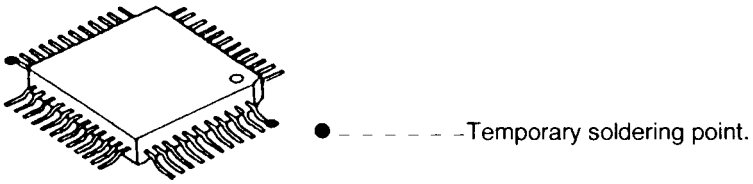

*Check the accuracy of the IC setting with the corresponding soldering foil.

2. Apply flux to all pins of the FLAT PACKAGE IC.

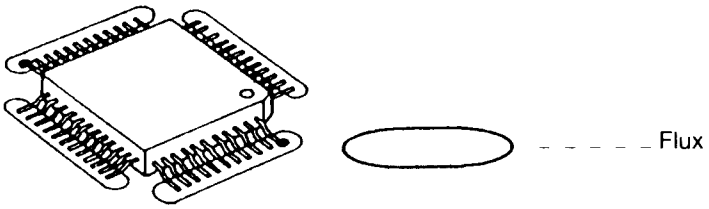

3. Solder the pins, sliding the soldering iron in the direction of the arrow.

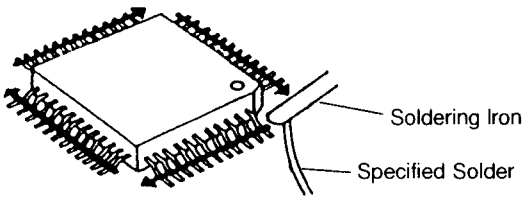

12.1.4. How to Remove a Solder Bridge

1. Lightly resolder the bridged portion.
2. Remove the remaining solder along the pins using a soldering iron as shown in the figure below.

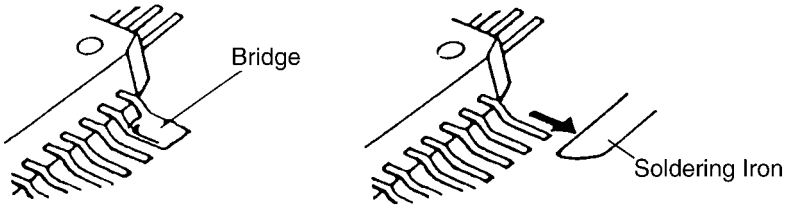

12.2. How to Replace the Shield Case

12.2.1. Preparation

- PbF (: Pb free) Solder
- Soldering Iron
  Tip Temperature of 700°F ± 20°F (370°C ± 10°C)
  Note:
  We recommend a 30 to 40 Watt soldering iron. An expert may be able to use a 60 to 80 Watt iron where someone with less experience could overheat and damage the PCB foil.
- Hot Air Desoldering Tool
  Temperature: 608°F ± 68°F (320°C ± 20°C)

12.2.2. Caution

- To replace the IC efficiently, choose the right sized nozzle of the hot air desoldering tool that matches the IC package.
- Be careful about the temperature of the hot air desoldering tool not to damage the PCB and/or IC.

12.2.3. How to Remove the Shield Case

Note:
If you don't have special tools (ex. Hot air disordering tool), conduct the following operations.

1. Cut the case along perforation.

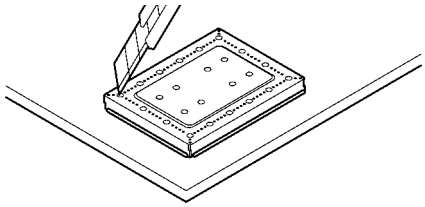

2. Remove the cut part.

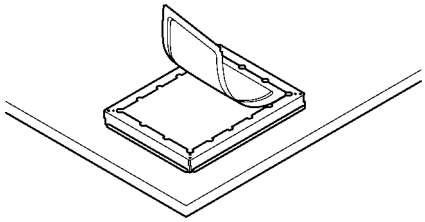

3. Cut the four corners along perforation.

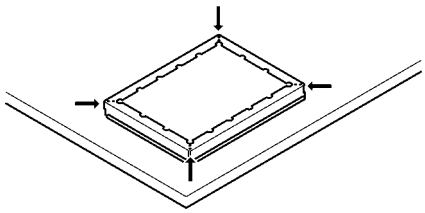

4. Remove the reminds by melting solder.

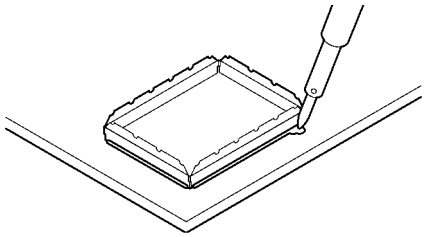

12.2.4. How to Install the Shield Case

Note:

- If you don't have special tools (ex. Hot air disordering tool), conduct the following operations.
- Shield case's No. : PNMC1013Z

1. Put the shield case.

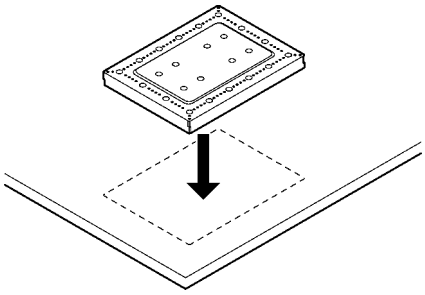

2. Solder the surroundings.

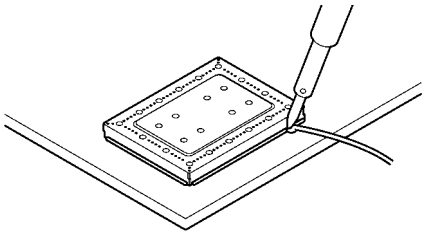

12.3. Terminal Guide of the ICs, Transistors and Diodes and Electrolytic Capacitors

12.3.1. Base Unit

(Reverse View) 40 21 41 20 60 1 61 80 C1CB00002906	4 1 5 8 PNWITG6511EH	5 1 6 10 C1CB00001842	5 4 1 2 3 B1ZBZ0000065 C0DBAGZ00026	E C B B1ACGP000007
B C E PQVTBF822T7, B1ADGE000004 UN9219J, UNR92A6J0L B1ABCE000009		B C E 2SD0874AS	+ − ~ ~ B0EDER000009	Cathode Anode PQVDRLZ20A MA8033
Cathode Anode B0DDCD000001	− + F2A1H100B132 F2A1C1010119 F2A1A3310040			

12.3.2. Handset

(Reverse View) 40 21 41 20 60 1 61 80 C1CB00002906	4 1 5 8 PNWIGA250EXR	5 1 6 10 C1CB00001842	B C E UN9219J, 2SC6054JSL B1ADGE000004, B1ADCF000161
Cathode Anode MA8043M MA2YD2120L MA2ZD0200L	Cathode Anode B0DDCD000001	Anode Cathode B3AEB0000124	− + F2A0J3310067

13 Schematic Diagram

13.1. For Schematic Diagram

13.1.1. Base Unit (Schematic Diagram (Base Unit))

Notes:

1. DC voltage measurements are taken with voltmeter from the negative voltage line.

> Important Safety Notice:
> Components identified by ⚠ mark have special characteristics important for safety. When replacing any of these components, use only the manufacturer's specified parts.

2. The schematic diagrams may be modified at any time with the development of new technology.

13.1.2. Handset (Schematic Diagram (Handset))

Notes:

1. DC voltage measurements are taken with an oscilloscope or a tester with a ground.
2. The schematic diagram may be modified at any time with the development of new technology.

13.1.3. Charger Unit (Schematic Diagram (Charger Unit))

Notes:

1. DC voltage measurements are taken with voltmeter from the negative voltage line.

> Important Safety Notice:
> Components identified by ⚠ mark have special characteristics important for safety. When replacing any of these components, use only the manufacturer's specified parts.

2. The schematic diagram may be modified at any time with the development of new technology.

13.2. Schematic Diagram (Base Unit)

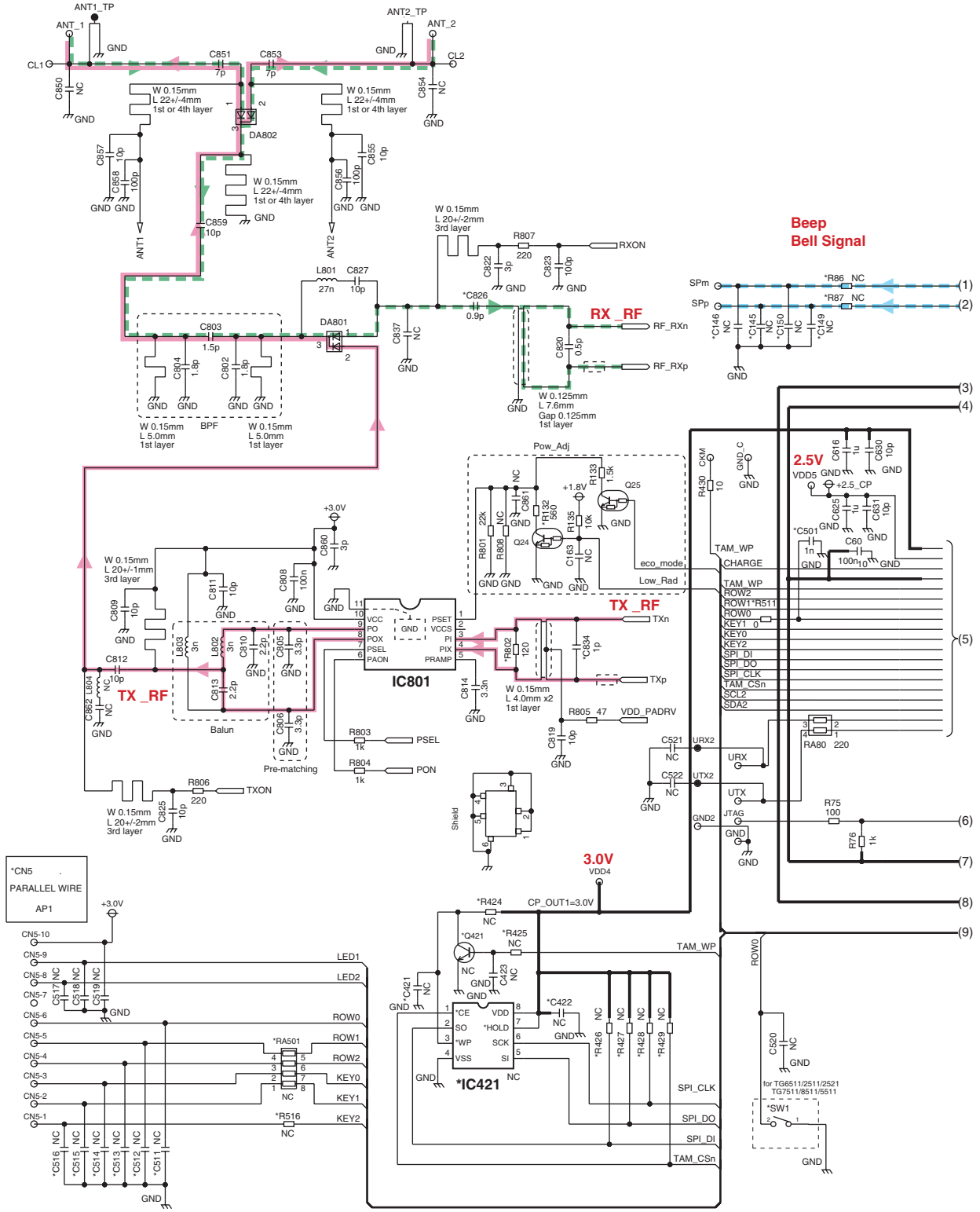

NC: No Components

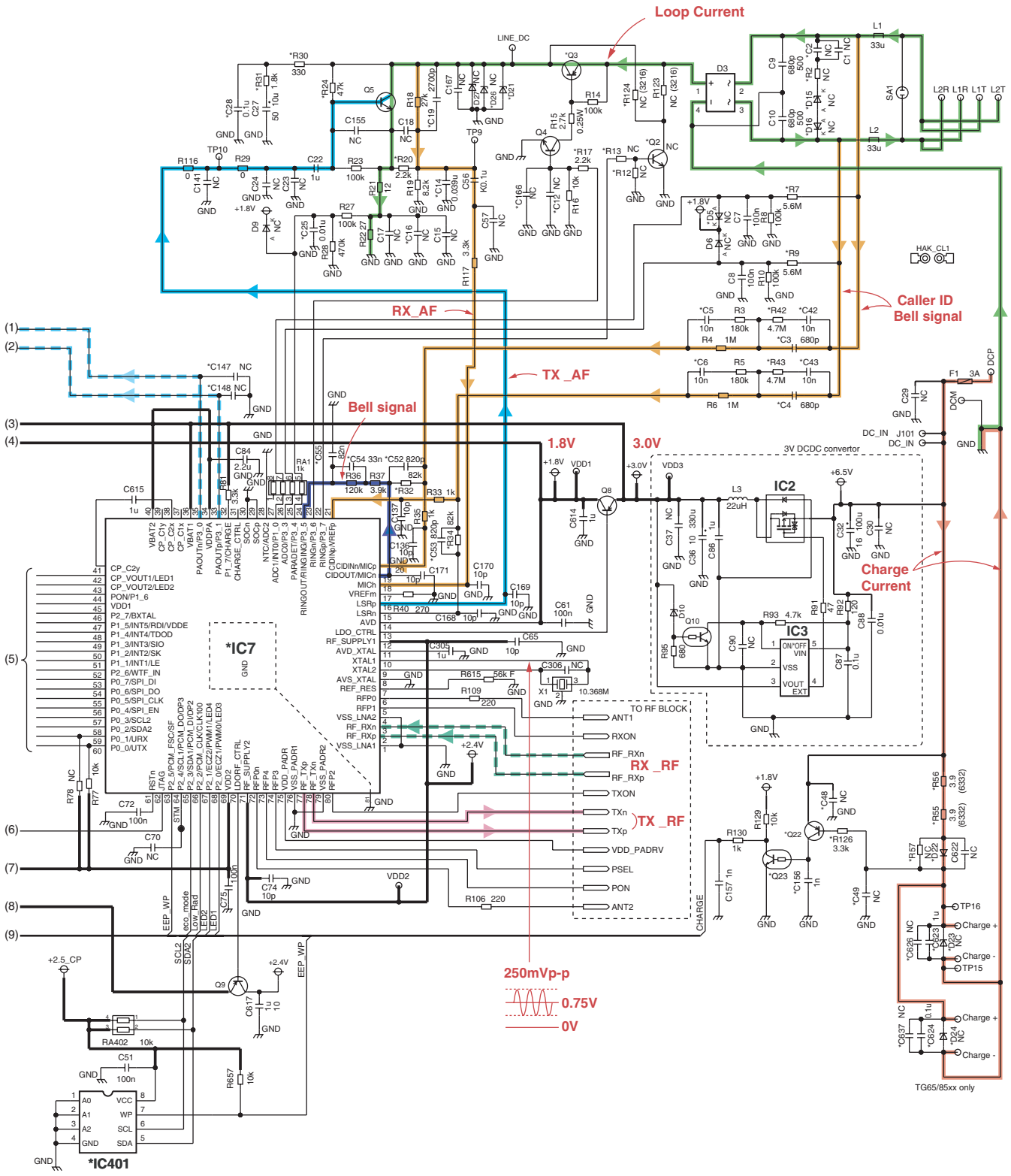

NC: No Components

KX-TG2511/2512CA SCHEMATIC DIAGRAM (Base Unit)

13.3. Schematic Diagram (Handset)

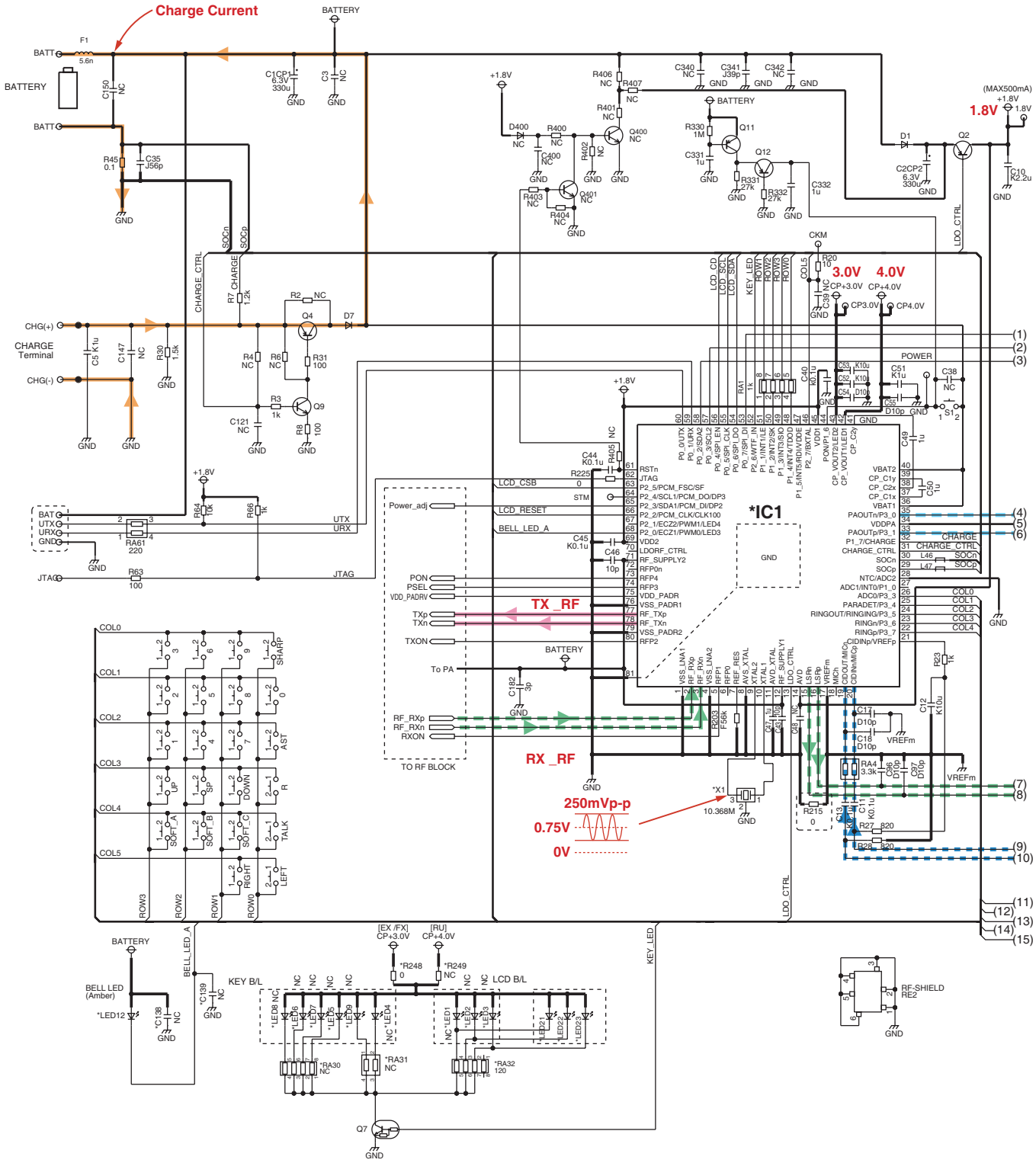

NC: No Components

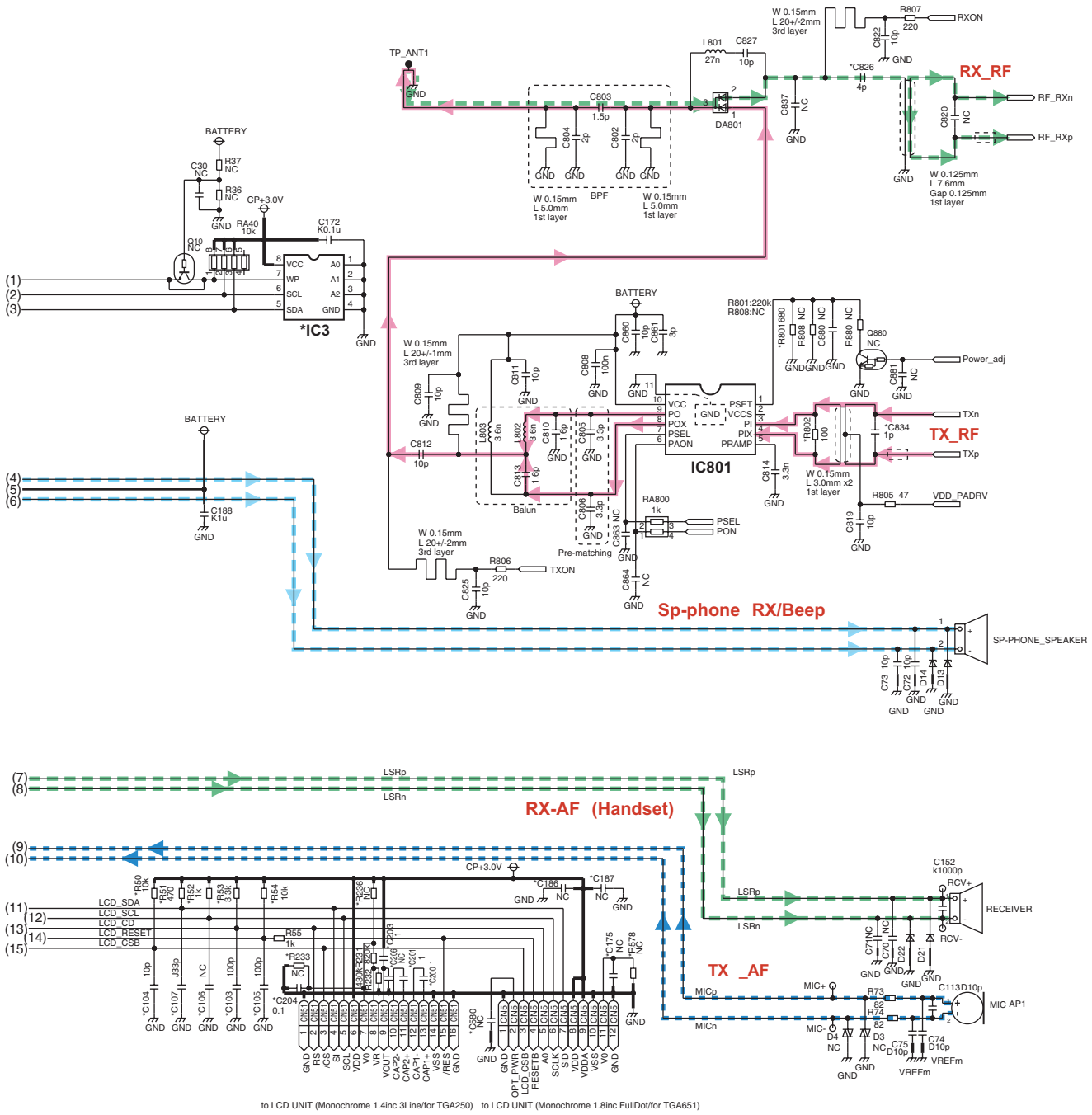

KX-TGA250 SCHEMATIC DIAGRAM (Handset_Main)

13.4. Schematic Diagram (Charger Unit)

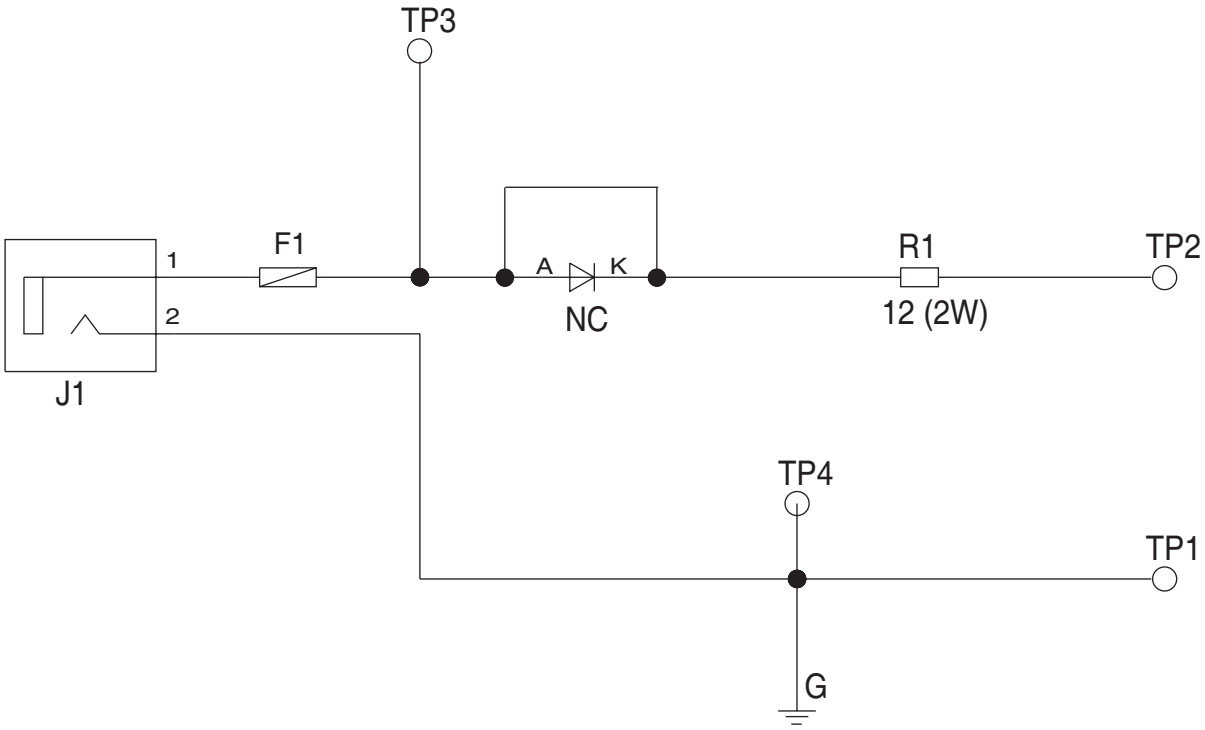

SCHEMATIC DIAGRAM (Charger Unit)

14 Printed Circuit Board

14.1. Circuit Board (Base Unit_Main)

14.1.1. Component View

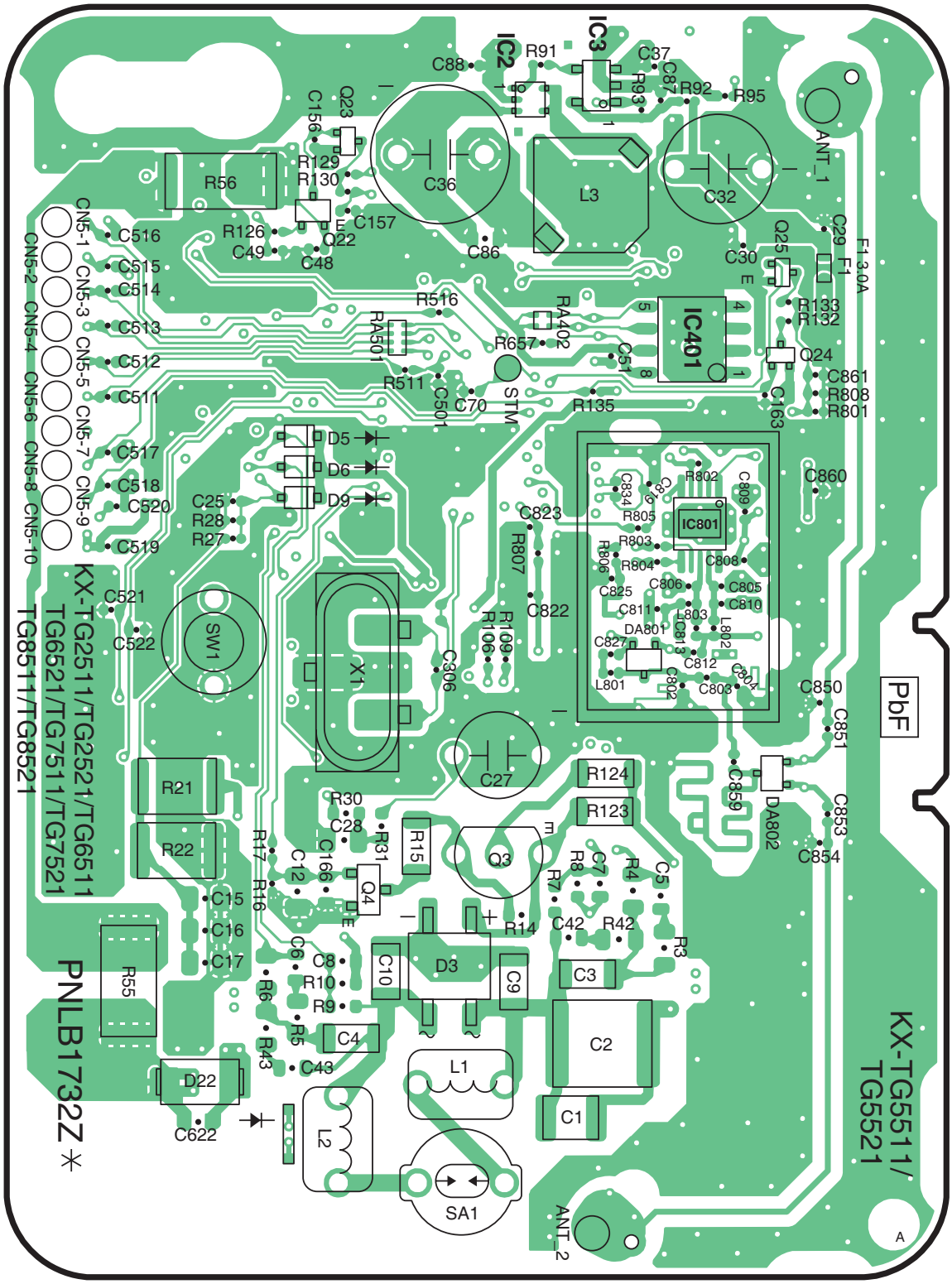

KX-TG2511/2512 CIRCUIT BOARD (Base Unit_Main (Component View))

14.1.2. Bottom View

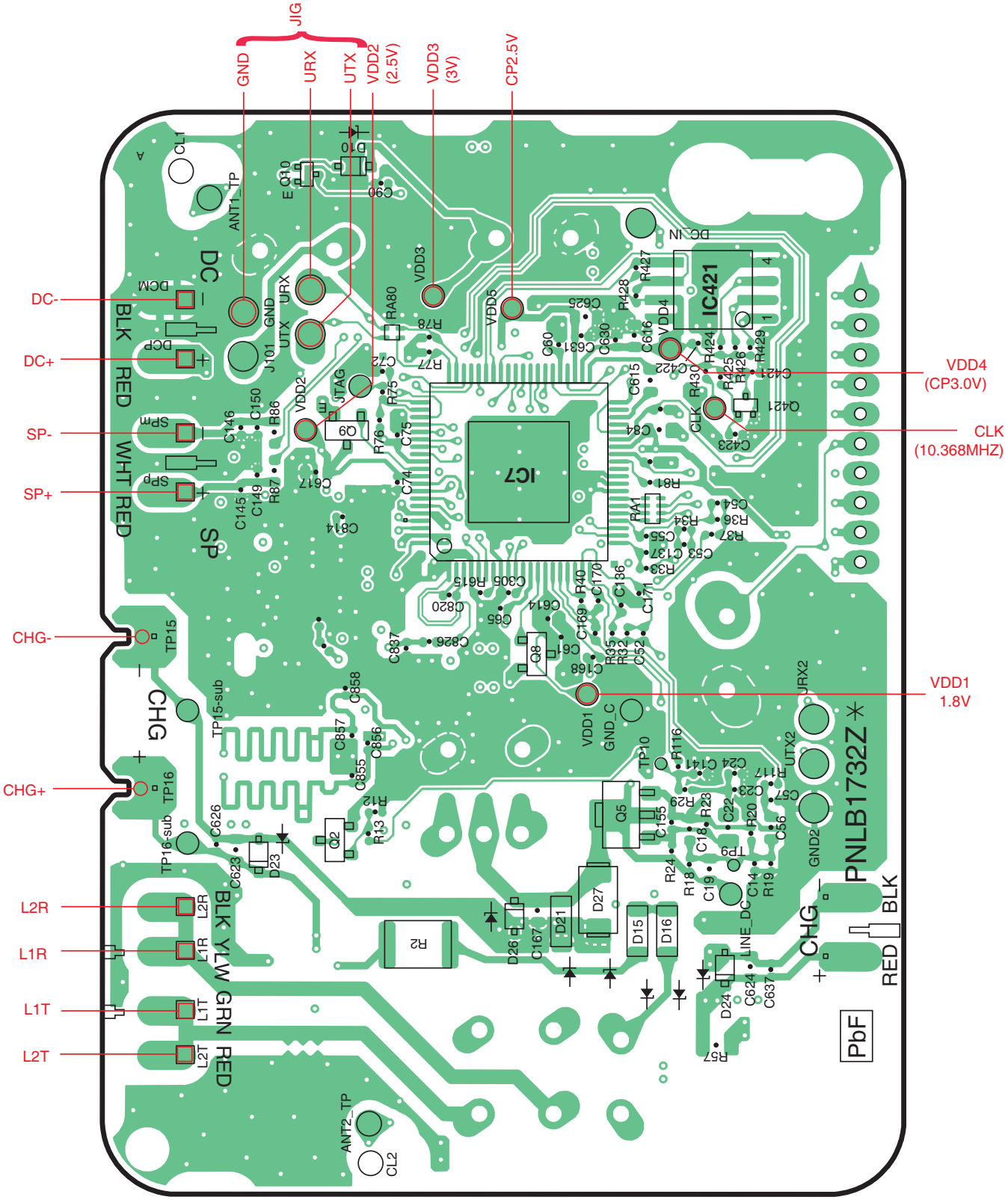

KX-TG2511/2512 CIRCUIT BOARD (Base Unit_Main (Bottom View))

14.2. Circuit Board (Handset)

14.2.1. Component View

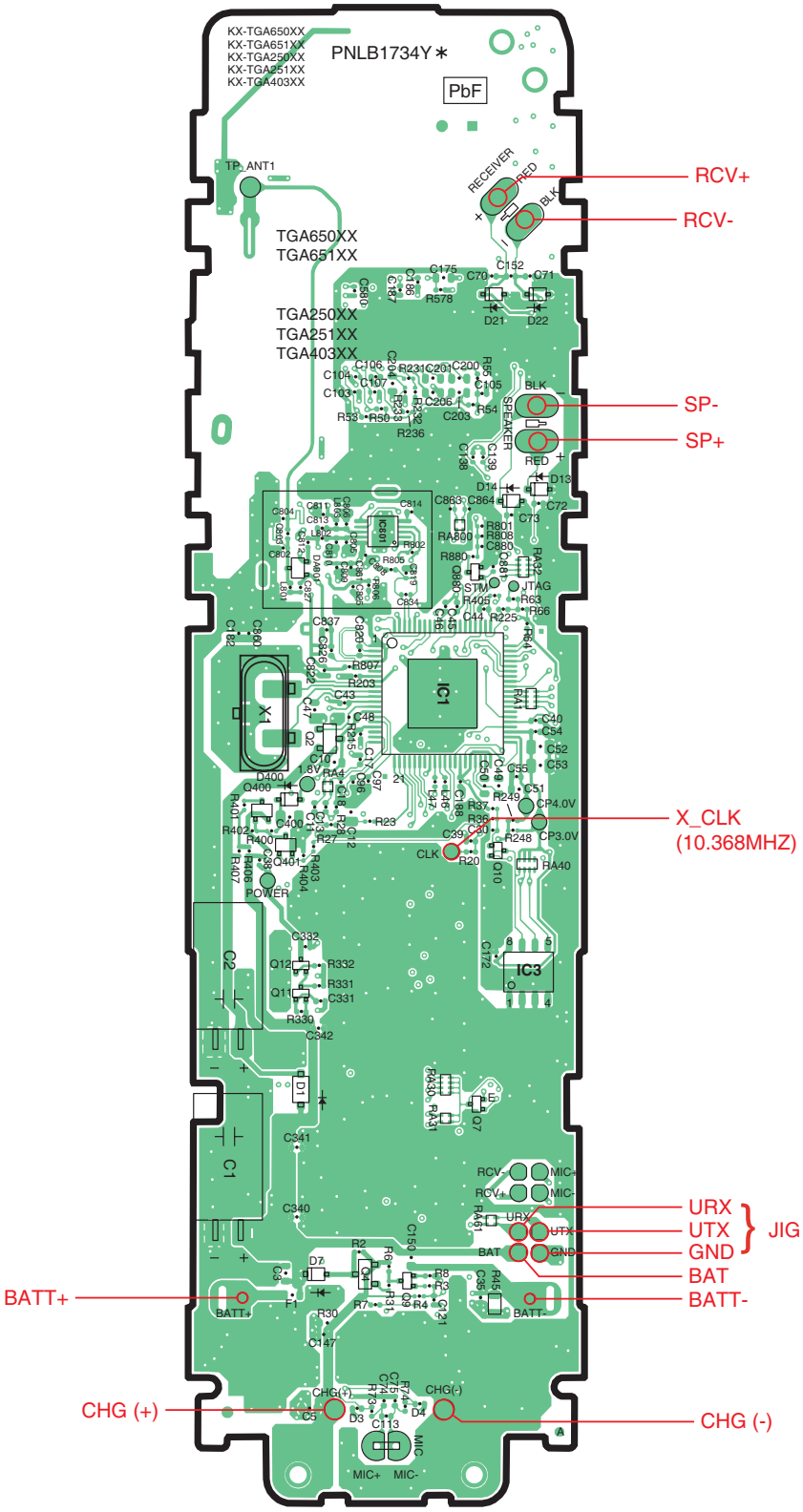

KX-TGA250 CIRCUIT BOARD (Handset_Main (Component View))

14.2.2. Bottom View

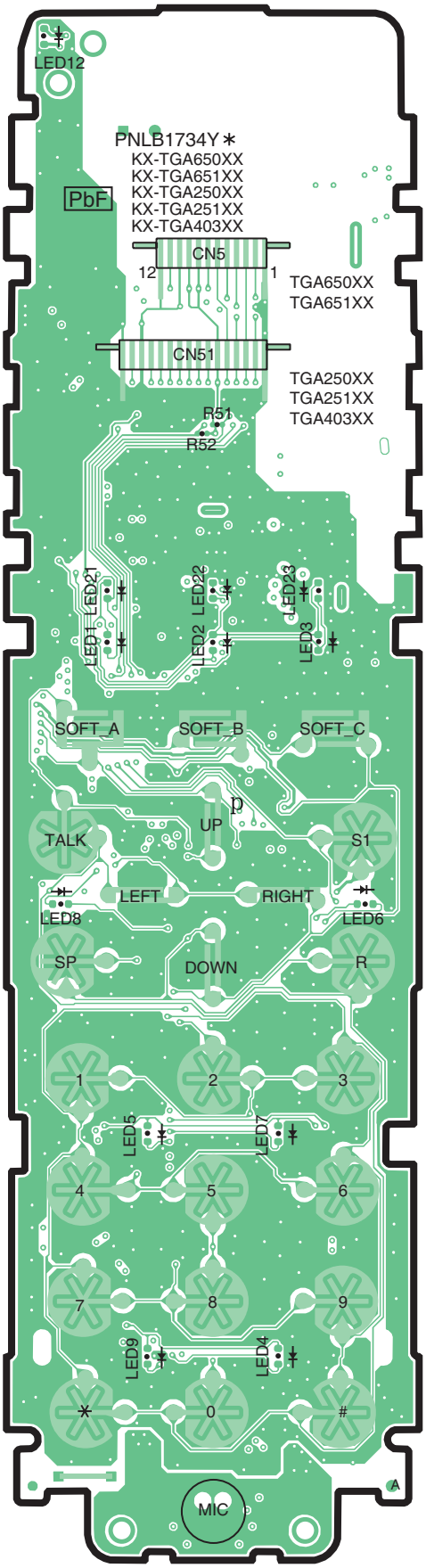

KX-TGA250 CIRCUIT BOARD (Handset_Main (Bottom View))

14.3. Circuit Board (Charger Unit)

14.3.1. Component View

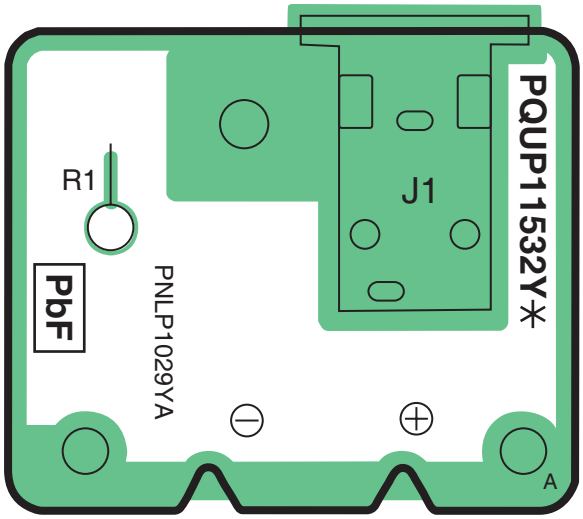

CIRCUIT BOARD (Charger unit (Component View))

14.3.2. Bottom View

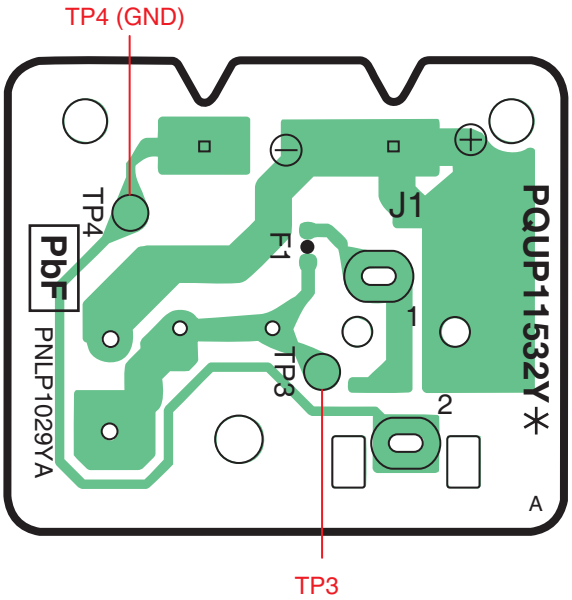

CIRCUIT BOARD (Charger unit (Bottom View))

15 Exploded View and Replacement Parts List

15.1. Cabinet and Electrical Parts (Base Unit)

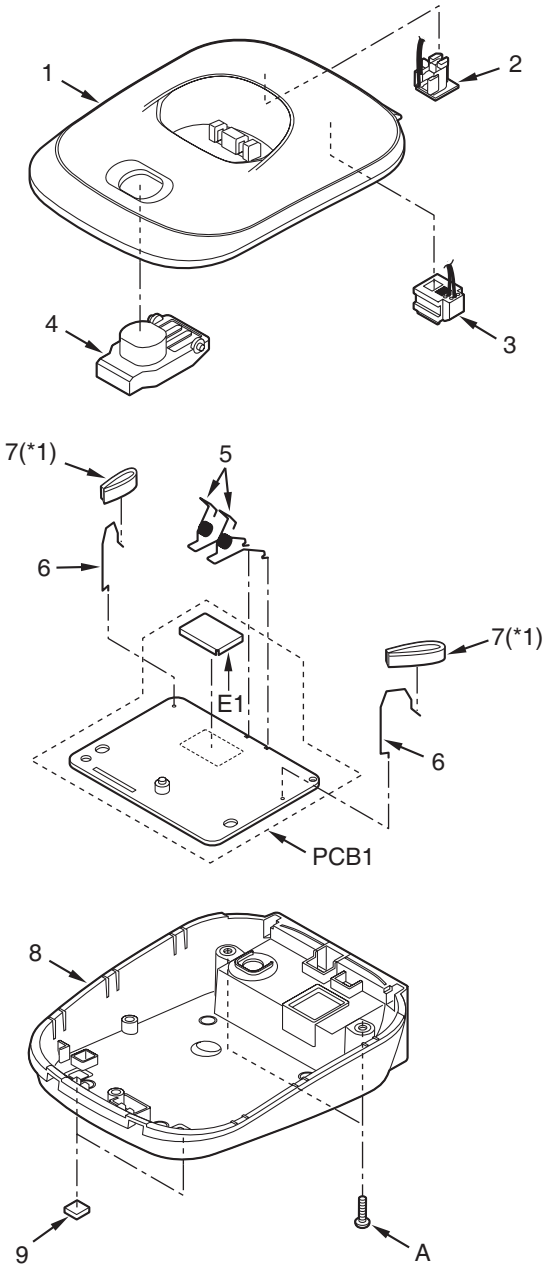

Ref.No.	Figure
A	ϕ2.6 x 8 mm

Note:

(*1) The SPACERs (No.7) are cut from the excess parts of SPACER (No.108) of **Cabinet and Electrical Parts (Handset)** (P.75).

15.2. Cabinet and Electrical Parts (Handset)

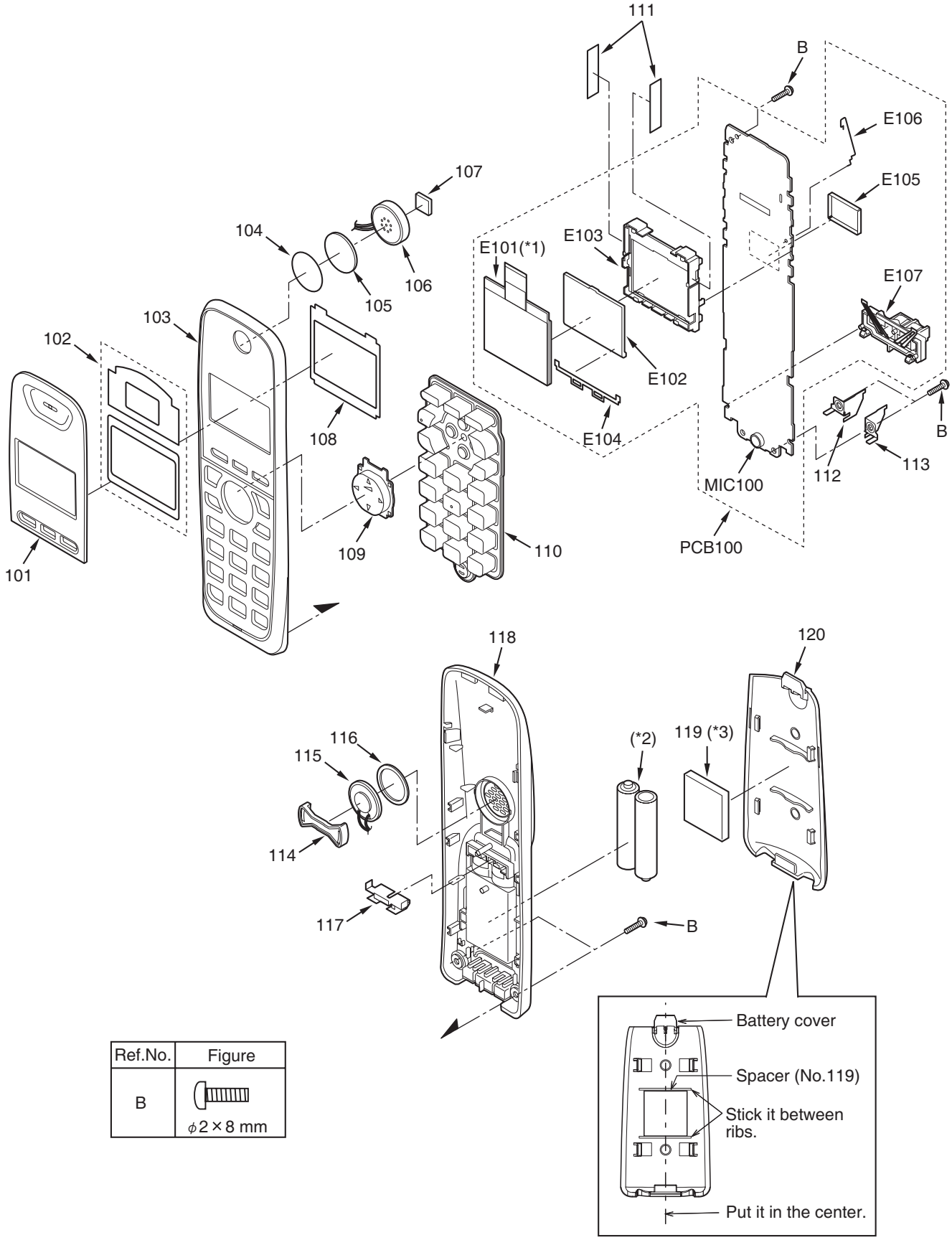

Ref.No.	Figure
B	ϕ2 × 8 mm

Note:

(*1) This cable is fixed by welding. Refer to **How to Replace the Handset LCD** (P.46).

(*2) The rechargeable Ni-MH battery P03P or HHR-4NGE is available through sales route of Panasonic.

(*3) Attach the spacer (No. 119) to the exact location described above.

15.3. Cabinet and Electrical Parts (Charger Unit)

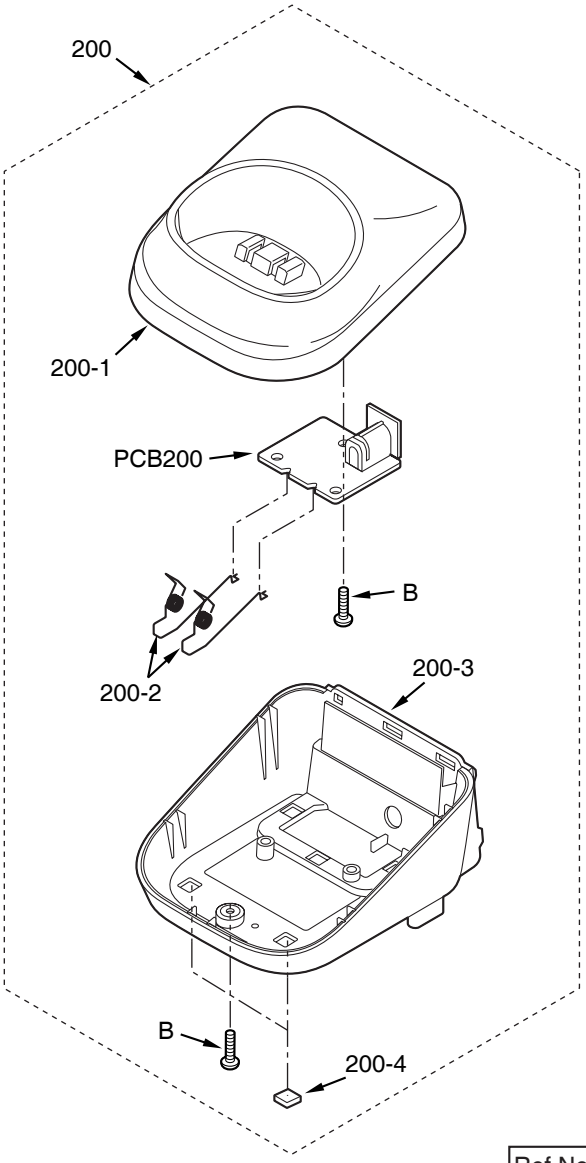

Ref.No.	Figure
B	$\phi 2 \times 8$ mm

15.4. Accessories

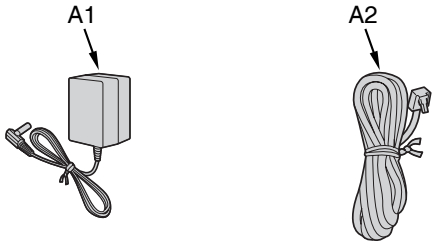

15.5. Replacement Part List

1. RTL (Retention Time Limited)

   Note:

   The "RTL" marking indicates that its Retention Time is Limited.

   When production is discontinued, this item will continue to be available only for a specific period of time. This period of time depends on the type of item, and the local laws governing parts and product retention.

   At the end of this period, the item will no longer be available.
2. Important safety notice

   Components identified by the ⚠ mark indicates special characteristics important for safety. When replacing any of these components, only use specified manufacture's parts.
3. The S mark means the part is one of some identical parts. For that reason, it may be different from the installed part.
4. ISO code (Example: ABS-94HB) of the remarks column shows quality of the material and a flame resisting grade about plastics.
5. RESISTORS & CAPACITORS

   Unless otherwise specified;

   All resistors are in ohms (Ω) k=1000 Ω, M=1000 kΩ

   All capacitors are in MICRO FARADS (μF)p=μμF

   *Type & Wattage of Resistor

Type

ERC:Solid ERDS:Carbon ERJ:Chip	ERX:Metal Film ERG:Metal Oxide ER0:Metal Film	PQ4R:Chip ERS:Fusible Resistor ERF:Cement Resistor

Wattage

10,16:1/8W	14,25:1/4W	12:1/2W	1:1W	2:2W	3:3W

*Type & Voltage Of Capacitor

Type

ECFD:Semi-Conductor ECQS:Styrol ECUV,PQCUV,ECUE:Chip ECQMS:Mica	ECCD,ECKD,ECBT,F1K,ECUV:Ceramic ECQE,ECQV,ECQG:Polyester ECEA,ECST,EEE:Electlytic ECQP:Polypropylene

Voltage

ECQ Type	ECQG ECQV Type	ECSZ Type	Others	
1H:50V 2A:100V 2E:250V 2H:500V	05:50V 1:100V 2:200V	0F:3.15V 1A:10V 1V:35V 0J:6.3V	0J :6.3V 1A :10V 1C :16V 1E,25:25V	1V :35V 50,1H:50V 1J :16V 2A :100V

15.5.1. Base Unit

15.5.1.1. Cabinet and Electrical Parts

Safety	Ref. No.	Part No.	Part Name & Description	Remarks
	1	PNKM1129Z1	CABINET BODY (for KX-TG2511CAM) (for KX-TG2512CAM)	PS-HB
	1	PNKM1129Z4	CABINET BODY (for KX-TG2511CAS)	PS-HB
	1	PNKM1129Y3	CABINET BODY (for KX-TG2511CAT) (for KX-TG2512CAT)	PS-HB
	2	K2ECYZ000001	JACK, DC	
	3	PQJJ1T039X	JACK, MODULAR	
	4	PNBC1303Y4	BUTTON, LOCATOR (for KX-TG2511CAM) (for KX-TG2512CAM)	ABS-HB
	4	PNBC1303Y3	BUTTON, LOCATOR (for KX-TG2511CAS)	ABS-HB
	4	PNBC1303Z2	BUTTON, LOCATOR (for KX-TG2511CAT) (for KX-TG2512CAT)	ABS-HB
	5	PNJT1046Z	CHARGE TERMINAL	
	6	PNLA1030Z	ANTENNA	
	7	PNYE1027Z	SPACER, ANTENNA	
	8	PNKF1097Z1	CABINET COVER (for KX-TG2511CAM) (for KX-TG2512CAM) (for KX-TG2511CAT) (for KX-TG2512CAT)	PS-HB
	8	PNKF1097Z2	CABINET COVER (for KX-TG2511CAS)	PS-HB
	9	PQHA10023Z	RUBBER PARTS,FOOT CUSHION	

15.5.1.2. Main P.C.Board Parts

Note:

(*1) When replacing IC7, IC401 or X1, make the adjustment using PNZZTG2511CA. Refer to **How to download the data** (P.54) of **Things to Do after Replacing IC or X'tal.**

(*2) When removing E1, use special tools (ex. Hot air disordering tool).

(*3) Backside of this IC has a ground plate.

(*4) Supplied IC is Flat Package Type.

Safety	Ref. No.	Part No.	Part Name & Description	Remarks
	PCB1	PNWPG2511CAH	MAIN P.C.BOARD ASS'Y (RTL)	
			(ICs)	
	IC3	C0DBAGZ00026	IC	
	IC7	C1CB00002906	IC (BBIC(FLASH)) (*1)(*3)(*4)	
	IC401	PNWITG6511EH	IC (EEPROM) (*1)	
	IC801	C1CB00001842	IC (*3)	
			(TRANSISTORS)	
	IC2	B1ZBZ0000065	TRANSISTOR(SI)	
	Q2	B1ABCE000009	TRANSISTOR(SI)	
	Q3	B1ACGP000007	TRANSISTOR(SI)	
	Q4	PQVTBF822T7	TRANSISTOR(SI)	
	Q5	2SD0874AS	TRANSISTOR(SI)	
	Q8	B1ADGE000004	TRANSISTOR(SI)	
	Q9	B1ADGE000004	TRANSISTOR(SI)	
	Q10	UNR92A6J0L	TRANSISTOR(SI)	
	Q24	UN9219J	TRANSISTOR(SI)	S
	Q25	UN9219J	TRANSISTOR(SI)	S
			(DIODES)	
	D3	B0EDER000009	DIODE(SI)	
	D10	MA8033	DIODE(SI)	S
	D21	PQVDRLZ20A	DIODE(SI)	S
	DA801	B0DDCD000001	DIODE(SI)	
	DA802	B0DDCD000001	DIODE(SI)	
			(COILS)	
	L1	PQLQXF330K	COIL	S
	L2	PQLQXF330K	COIL	S
	L3	G1C220M00037	COIL	
	L801	G1C27NJ00010	COIL	
	L802	G1C3N0ZA0063	COIL	
	L803	G1C3N0ZA0063	COIL	
			(RESISTOR ARRAYS)	
	RA1	D1H810240004	RESISTOR ARRAY	S
	RA402	D1H410320002	RESISTOR ARRAY	
	RA80	D1H422120001	RESISTOR ARRAY	
			(VARISTOR)	
	SA1	J0LF00000026	VARISTOR (SURGE ABSORBER)	
			(RESISTORS)	
	R3	PQ4R10XJ184	180k	S

Safety	Ref. No.	Part No.	Part Name & Description	Remarks
	R4	PQ4R10XJ105	1M	S
	R5	PQ4R10XJ184	180k	S
	R6	PQ4R10XJ105	1M	S
	R8	ERJ3GEYJ104	100k	S
	R10	ERJ3GEYJ104	100k	S
	R12	ERJ2GEJ103	10k	S
	R13	ERJ2GEJ681	680	S
	R14	ERJ3GEYJ104	100k	S
	R15	PQ4R18XJ272	2.7k	S
	R16	ERJ2GEJ103	10k	S
	R17	ERJ2GEJ222	2.2k	S
	R18	ERJ2GEJ273X	27k	S
	R19	ERJ2GEJ822	8.2k	S
	R20	ERJ2GEJ272	2.7k	S
	R21	ERJ12YJ120	12	
	R22	ERJ12YJ270	27	
	R23	ERJ2GEJ104	100k	S
	R24	ERJ2GEJ473	47k	S
	R27	ERJ2GEJ104	100k	S
	R28	ERJ2GEJ474X	470k	S
	R29	ERJ2GE0R00	0	S
	R30	ERJ3GEYJ471	470	S
	R31	ERJ3GEYJ471	470	S
	R32	ERJ2GEJ823	82k	S
	R33	ERJ2GEJ102	1k	S
	R34	ERJ2GEJ823	82k	S
	R35	ERJ2GEJ102	1k	S
	R36	ERJ2GEJ124	120k	S
	R37	ERJ2GEJ392	3.9k	S
	R40	ERJ2GEJ271	270	S
	R42	PQ4R10XJ475	4.7M	S
	R43	PQ4R10XJ475	4.7M	S
	R55	ERJ1TYJ5R6U	5.6	
	R56	ERJ1TYJ5R6U	5.6	
	R57	ERJ6GEY0R00	0	S
	R75	ERJ2GEJ101	100	S
	R76	ERJ2GEJ102	1k	S
	R77	ERJ2GEJ103	10k	S
	R81	ERJ2GEJ332	3.3k	S
	R91	ERJ2GEJ470	47	S
	R92	ERJ2GEJ121	120	S
	R93	ERJ2GEJ472X	4.7k	S
	R95	ERJ2GEJ681	680	S
	R106	ERJ2GEJ221	220	S
	R109	ERJ2GEJ221	220	S
	R116	ERJ2GE0R00	0	S
	R117	ERJ2GEJ332	3.3k	S
	R124	PQ4R18XJ100	10	S
	R129	ERJ2GEJ103	10k	S
	R130	ERJ2GEJ102	1k	S
	R132	ERJ2GEJ561	560	S
	R133	ERJ2GEJ152	1.5k	S
	R135	ERJ2GEJ103	10k	S
	R430	ERJ2GEJ100	10	S
	R511	ERJ2GE0R00	0	S
	R615	D0GA563ZA006	56k	
	R657	ERJ2GEJ103	10k	S
	R801	ERJ2GEJ223	22k	S
	R802	ERJ2GEJ121	120	S
	R803	ERJ2GEJ102	1k	S
	R804	ERJ2GEJ102	1k	S
	R805	ERJ2GEJ470	47	S
	R806	ERJ2GEJ221	220	S
	R807	ERJ2GEJ221	220	S
			(CAPACITORS)	
	C3	F1K2H681A008	680p	
	C4	F1K2H681A008	680p	
	C5	ECUV1C103KBV	0.01	
	C6	ECUV1C103KBV	0.01	
	C7	ECUV1C104KBV	0.1	
	C8	ECUV1C104KBV	0.1	
	C9	F1K2H681A008	680p	
	C10	F1K2H681A008	680p	

Safety	Ref. No.	Part No.	Part Name & Description	Remarks
	C14	ECUE1A273KBQ	0.027	
	C19	ECUV1H122KBV	0.0012	
	C22	PQCUV1A105KB	1	
	C25	ECJ0EB1A473K	0.047	S
	C27	F2A1H100B132	10	
	C28	PQCUV1H333JC	0.033	S
	C32	F2A1C1010119	100	
	C36	F2A1A3310040	330	
	C42	ECUV1C103KBV	0.01	
	C43	ECUV1C103KBV	0.01	
	C51	ECUE1A104KBQ	0.1	
	C52	ECUE1H821KBQ	820p	
	C53	ECUE1H821KBQ	820p	
	C54	ECUE1A333KBQ	0.033	
	C55	ECUE1A823KBQ	0.082	
	C56	ECUV1C104KBV	0.1	
	C60	ECUE1A104KBQ	0.1	
	C61	ECUE1A104KBQ	0.1	
	C65	ECUE1H100DCQ	10p	
	C72	ECUE1A104KBQ	0.1	
	C74	F1G1H100A723	10p	
	C75	ECUE1A104KBQ	0.1	
	C84	ECUV1A225KB	2.2	
	C86	ECUV1A105KBV	1	
	C87	ECUE1A104KBQ	0.1	
	C88	ECUE1C103KBQ	0.01	
	C136	ECUE1H100DCQ	10p	
	C137	ECUE1H100DCQ	10p	
	C157	ECUE1H102KBQ	0.001	
	C168	F1G1H100A723	10p	
	C169	F1G1H100A723	10p	
	C170	F1G1H100A723	10p	
	C171	F1G1H100A723	10p	
	C305	ECUE0J105KBQ	1	
	C501	ECUE1H102KBQ	0.001	
	C614	ECUV1A105KBV	1	
	C615	ECUV1A105KBV	1	
	C616	ECUV1A105KBV	1	
	C617	ECUV1A105KBV	1	
	C623	ECUV1C105ZFV	1	
	C624	ECUV1H104ZFV	0.1	
	C625	ECUV1A105KBV	1	
	C630	F1G1H100A723	10p	
	C631	F1G1H100A723	10p	
	C802	F1G1H1R8A480	1.8p	
	C803	F1G1H1R5A480	1.5p	
	C804	F1G1H1R8A480	1.8p	
	C805	F1G1H3R3A480	3.3p	
	C806	F1G1H3R3A480	3.3p	
	C808	ECUE1A104KBQ	0.1	
	C809	F1G1H100A723	10p	
	C810	F1G1H2R2A480	2.2p	
	C811	F1G1H100A723	10p	
	C812	F1G1H100A723	10p	
	C813	F1G1H2R2A480	2.2p	
	C814	ECUE1H332KBQ	0.0033	
	C819	F1G1H100A723	10p	
	C820	F1G1HR50A480	0.5p	
	C822	F1G1H3R0A480	3p	
	C823	ECUE1H101JCQ	100p	
	C825	F1G1H100A723	10p	
	C826	F1G1HR90A480	0.9p	
	C827	F1G1H100A723	10p	
	C834	F1G1H1R0A480	1p	
	C851	F1G1H7R0A480	7p	
	C853	F1G1H7R0A480	7p	
	C855	F1G1H100A723	10p	
	C856	ECUE1H101JCQ	100p	
	C857	F1G1H100A723	10p	
	C858	ECUE1H101JCQ	100p	
	C859	F1G1H100A723	10p	
	C860	F1G1H3R0A480	3p	
			(OTHERS)	

Safety	Ref. No.	Part No.	Part Name & Description	Remarks
	E1	PNMC1013Z	CASE, MAGNETIC SHIELD(*2)	
	X1	H0J103500027	CRYSTALOSCILLATOR(*1)	
	F1	K5H302Y00003	FUSE	
	SW1	K0H1BA000259	SPECIAL, SWITCH	

15.5.2. Handset

15.5.2.1. Cabinet and Electrical Parts

Safety	Ref. No.	Part No.	Part Name & Description	Remarks
	101	PNGP1087Z1	PANEL, LCD (for KX-TGA250RUM)	PMMA-HB
	101	PNGP1087Z3	PANEL, LCD (for KX-TGA250RUS)	PMMA-HB
	101	PNGP1087Z2	PANEL, LCD (for KX-TGA250RUT)	PMMA-HB
	102	PNYE1026Z	TAPE, DOUBLESIDED	
	103	PNKM1123X1	CABINET BODY (for KX-TGA250RUM)	PS-HB
	103	PNKM1123X3	CABINET BODY (for KX-TGA250RUS)	PS-HB
	103	PNKM1123X2	CABINET BODY (for KX-TGA250RUT)	PS-HB
	104	PNHS1072Z	SPACER, RECEIVER NET	
	105	PQHS10467Z	COVER, SPEAKER NET	
	106	L0AD02A00028	RECEIVER	
	107	PQHG10729Z	RUBBER PARTS, RECEIVER	
	108	PNYE1027Z	SPACER, CUSHION LCD	
	109	PNBC1003Z2	BUTTON, VOLUME KEY (for KX-TGA250RUM)(for KX-TGA250RUT)	ABS-HB
	109	PNBC1003Y3	BUTTON, VOLUME KEY (for KX-TGA250RUS)	ABS-HB
	110	PNJK1072V	KEYBOARD SWITCH (for KX-TGA250RUM)(for KX-TGA250RUT)	
	110	PNJK1072X	KEYBOARD SWITCH (for KX-TGA250RUS)	
	111	PNHX1165Z	COVER, LCD SHEET	
	112	PNJT1027Z	CHARGE TERMINAL (L)	
	113	PNJT1026Z	CHARGE TERMINAL (R)	
	114	PQHR11315Z	GUIDE, SPEAKER	ABS-HB
	115	L0AA02A00095	SPEAKER	
	116	PQHS10784Y	SPACER, SPEAKER NET	
	117	PQJC10056W	BATTERY TERMINAL	
	118	PNKF1093Z1	CABINET COVER (for KX-TGA250RUM)(for KX-TGA250RUT)	ABS-HB
	118	PNKF1093Z2	CABINET COVER (for KX-TGA250RUS)	ABS-HB
	119	PNHS1079Z	SPACER, BATTERY	
	120	PNKK1038Y1	LID, BATTERY (for KX-TGA250RUM)(for KX-TGA250RUT)	ABS-HB
	120	PNKK1038Y2	LID, BATTERY (for KX-TGA250RUS)	ABS-HB

15.5.2.2. Main P.C.Board Parts

Note:

(*1) Reconfirm the model No. written on the handset's name plate when replacing PCB100. Because the model No. of the optional handset may differ from the included handset.

(*2) When replacing IC1, IC3 or X1, make the adjustment using PNZZTG2511CA. Refer to **Handset** (P.55) of **Things to Do after Replacing IC or X'tal.**

(*3) When removing E105, use special tools (ex. Hot air disordering tool).

(*4) When replacing the handset LCD, See **How to Replace the Handset LCD**(P.46).

(*5) Backside of this IC has a ground plate.

(*6) Supplied IC is Flat Package Type.

Safety	Ref. No.	Part No.	Part Name & Description	Remarks
	PCB100	PNWPGA250RUR	MAIN P.C.BOARD ASS'Y (RTL) (*1)	
			(ICs)	
	IC1	C1CB00002906	IC (BBIC (FLASH)) (*2)(*5)(*6)	
	IC3	PNWIGA250EXR	IC (EEPROM) (*2)	
	IC801	C1CB00001842	IC (*5)	
			(TRANSISTORS)	
	Q2	B1ADGE000004	TRANSISTOR(SI)	
	Q4	B1ADGE000004	TRANSISTOR(SI)	
	Q7	UN9219J	TRANSISTOR(SI)	S
	Q9	2SC6054JSL	TRANSISTOR(SI)	
	Q11	B1ADCF000161	TRANSISTOR(SI)	
	Q12	B1ADCF000161	TRANSISTOR(SI)	
			(DIODES)	
	D1	MA2YD2120L	DIODE(SI)	
	D7	MA2ZD0200L	DIODE(SI)	
	D13	MA8043M	DIODE(SI)	S
	D14	MA8043M	DIODE(SI)	S
	D21	MA8043M	DIODE(SI)	S
	D22	MA8043M	DIODE(SI)	S
	DA801	B0DDCD000001	DIODE(SI)	
			(LEDS)	
	LED21	B3AEB0000124	LED	
	LED22	B3AEB0000124	LED	
	LED23	B3AEB0000124	LED	
			(COILS)	
	F1	PQLQR2M5N6K	COIL	S
	L801	G1C27NJ00010	COIL	
	L802	G1C3N6ZA0063	COIL	
	L803	G1C3N6ZA0063	COIL	
			(RESISTOR ARRAYS)	
	RA1	D1H810240004	RESISTOR ARRAY	S
	RA4	D1H433220001	RESISTOR ARRAY	
	RA32	EXB28V151JX	RESISTOR ARRAY	
	RA40	EXB28V103	RESISTOR ARRAY	
	RA61	D1H422120001	RESISTOR ARRAY	
	RA800	D1H410220001	RESISTOR ARRAY	
			(IC FILTERS)	
	L46	J0JDC0000045	IC FILTER	
	L47	J0JDC0000045	IC FILTER	
			(RESISTORS)	
	R3	ERJ2GEJ102	1k	S
	R7	ERJ2GEJ122	1.2k	S
	R8	ERJ2GEJ101	100	S
	R20	ERJ2GEJ100	10	S
	R23	ERJ2GEJ102	1k	S
	R27	ERJ2GEJ821	820	S
	R28	ERJ2GEJ821	820	S
	R30	ERJ3GEYJ152	1.5k	S
	R31	ERJ2GEJ101	100	S
	R45	ERJ6RSJR10V	0.1	
	R50	ERJ2GEJ103	10k	S
	R51	ERJ2GEJ471	470	S
	R52	ERJ2GEJ102	1k	S
	R53	ERJ2GEJ332	3.3k	S
	R54	ERJ2GEJ103	10k	S
	R55	ERJ2GEJ102	1k	S
	R63	ERJ2GEJ101	100	S
	R64	ERJ2GEJ103	10k	S
	R66	ERJ2GEJ102	1k	S
	R73	ERJ2GEJ820	82	S
	R74	ERJ2GEJ820	82	S
	R203	D0GA563ZA006	56k	
	R215	ERJ2GE0R00	0	S
	R225	ERJ2GE0R00	0	S
	R231	ERJ2GEJ824	820k	S
	R232	ERJ2GEJ434X	430k	S
	R249	ERJ2GE0R00	0	S
	R330	ERJ2GEJ105X	1M	S
	R331	ERJ2GEJ273X	27k	S
	R332	ERJ2GEJ273X	27k	S

Safety	Ref. No.	Part No.	Part Name & Description	Remarks
	R801	ERJ2GEJ681	680	S
	R802	ERJ2GEJ101	100	S
	R805	ERJ2GEJ470	47	S
	R806	ERJ2GEJ221	220	S
	R807	ERJ2GEJ221	220	S
			(CAPACITORS)	
	C1	F2A0J3310067	330	
	C2	F2A0J3310067	330	
	C5	ECUV1A105KBV	1	
	C10	ECUV1A225KB	2.2	
	C11	ECUE1A104KBQ	0.1	
	C12	PQCUV0J106KB	10	
	C13	ECUE1A104KBQ	0.1	
	C17	ECUE1H100DCQ	10p	
	C18	ECUE1H100DCQ	10p	
	C35	ECUE1H560JCQ	56p	
	C40	ECUE1A104KBQ	0.1	
	C43	ECUE1H100DCQ	10p	
	C44	ECUE1A104KBQ	0.1	
	C45	ECUE1A104KBQ	0.1	
	C46	ECUE1H100DCQ	10p	
	C47	ECUV1A105KBV	1	
	C49	ECUV1A105KBV	1	
	C50	ECUV1A105KBV	1	
	C51	ECUV1A105KBV	1	
	C52	PQCUV0J106KB	10	
	C53	PQCUV0J106KB	10	
	C54	ECUE1H100DCQ	10p	
	C55	ECUE1H100DCQ	10p	
	C72	ECUE1H100DCQ	10p	
	C73	ECUE1H100DCQ	10p	
	C74	ECUE1H100DCQ	10p	
	C75	ECUE1H100DCQ	10p	
	C96	ECUE1H100DCQ	10p	
	C97	ECUE1H100DCQ	10p	
	C103	ECUE1H101JCQ	100p	
	C104	F1G1H100A723	10p	
	C105	ECUE1H101JCQ	100p	
	C107	ECUE1H330JCQ	33p	S
	C113	ECUE1H100DCQ	10p	
	C152	ECUE1H102KBQ	0.001	
	C172	ECUE1A104KBQ	0.1	
	C182	F1G1H3R0A480	3p	
	C188	ECUE0J105KBQ	1	
	C200	ECUV1C105KBV	1	
	C201	ECUV1C105KBV	1	
	C203	ECUV1C105KBV	1	
	C204	ECUV1C104KBV	0.1	
	C331	ECUE0J105KBQ	1	
	C332	ECUE0J105KBQ	1	
	C341	ECUE1H390JCQ	39p	
	C802	F1G1H2R0A480	2.0p	
	C803	F1G1H1R5A480	1.5p	
	C804	F1G1H2R0A480	2.0p	
	C805	F1G1H3R3A480	3.3p	
	C806	F1G1H3R3A480	3.3p	
	C808	ECUE1A104KBQ	0.1	
	C809	F1G1H100A723	10p	
	C810	F1G1H1R6A480	1.6p	
	C811	F1G1H100A723	10p	
	C812	F1G1H100A723	10p	
	C813	F1G1H1R6A480	1.6p	
	C814	ECUE1H332KBQ	0.0033	
	C819	F1G1H100A723	10p	
	C822	F1G1H100A723	10p	
	C825	F1G1H100A723	10p	
	C826	F1G1H4R0A480	4p	
	C827	F1G1H100A723	10p	
	C834	F1G1H1R0A480	1p	
	C860	F1G1H100A723	10p	
	C861	F1G1H3R0A480	3p	
			(OTHERS)	
	MIC100	L0CBAY000032	MICROPHONE	

Safety	Ref. No.	Part No.	Part Name & Description	Remarks
	E101	L5DYBYY00017	LIQUID CRYSTAL DISPLAY (*4)	
	E102	PNHR1247Z	TRANSPARENT PLATE, LCD	PMMA-HB
	E103	PNHR1246Z	GUIDE, LCD	ABS-HB
	E104	PNHX1254Z	COVER, LCD	
	E105	PNMC1013Z	CASE,MAGNETIC SHIELD (*3)	
	E106	PNLA1020Z	ANTENNA	
	E107	PNVE1002Z	BATTERY TERMINAL	
	X1	H0J103500034	CRYSTAL OSCILLATOR (*2)	

15.5.3. Charger Unit

15.5.3.1. Cabinet and Electrical Parts

Safety	Ref. No.	Part No.	Part Name & Description	Remarks
	200	PNLC1010ZM	CHARGER UNIT ASS'Y without NAME PLATE (RTL)(for KX-TG2512CAM)	
	200	PNLC1010ZT	CHARGER UNIT ASS'Y without NAME PLATE (RTL)(for KX-TG2512CAT)	
	200-1	PNKM1131Y5	CABINET BODY (for KX-TG2512CAM)	PS-HB
	200-1	PNKM1131Y2	CABINET BODY (for KX-TG2512CAT)	PS-HB
	200-2	PNJT1010Z	CHARGE TERMINAL	
	200-3	PNKF1098Z1	CABINET COVER	PS-HB
	200-4	PQHA10023Z	RUBBER PARTS, FOOT CUSHION	

15.5.3.2. Main P.C.Board Parts

Safety	Ref. No.	Part No.	Part Name & Description	Remarks
	PCB200	PNWPTGA641CH	MAIN P.C.BOARD ASS'Y (RTL)	
			(JACK)	
	J1	K2ECYB000001	JACK	S
			(RESISTOR)	
	R1	ERG2SJ120	12	
			(FUSE)	
	F1	K5H302Y00003	FUSE	

15.5.4. Accessories

Note:

You can download and refer to the Operating Instructions (Instruction book) on TSN Server.

Safety	Ref. No.	Part No.	Part Name & Description	Remarks
⚠	A1	PQLV219CEZ	AC ADAPTOR	
	A2	PQJA10075Z	CORD, TELEPHONE	

15.5.5. Screws

Safety	Ref. No.	Part No.	Part Name & Description	Remarks
	A	XTB26+8GFJ	TAPPING SCREW	
	B	XTB2+8GFJ	TAPPING SCREW	

15.5.6. Fixtures and Tools

Note:

(*1) See **Equipment Required** (P.47), and **The Setting Method of JIG (Handset)** (P.51).

(*2) When replacing the Handset LCD, See **How to Replace the Handset LCD** (P.46).

Safety	Ref. No.	Part No.	Part Name & Description	Remarks
		PQZZ1CD300E	JIG CABLE (*1)	
		PNZZTG2511CA	BATCH FILE CD-ROM (*1)	
		PQZZ430PIR	TIP OF SOLDERING IRON (*2)	
		PQZZ430PRB	RUBBER OF SOLDERING IRON (*2)	

T.I
KXTG2511CAM
KXTG2511CAS
KXTG2511CAT
KXTG2512CAM
KXTG2512CAT
KXTGA250RUM
KXTGA250RUS
KXTGA250RUT