Manual

Models **1232E/34E/36E/38E** and **1232SE/34SE/36SE**

Enhanced AC Controllers for Induction Motors and Surface Permanent Magnet Motors

» Software Version OS 30.0 «

Curtis Instruments, Inc.
200 Kisco Avenue
Mt. Kisco, NY 10549
www.curtisinstruments.com

Read Instructions Carefully!

Specifications are subject to change without notice.
© 2015 Curtis Instruments, Inc. ® Curtis is a registered trademark of Curtis Instruments, Inc.
© The design and appearance of the products depicted herein are the copyright of Curtis Instruments, Inc.

53134, OS30 11/24/2015

Downloaded from www.Manualslib.com manuals search engine

The Curtis Difference

You feel it when you drive it

Downloaded from www.Manualslib.com manuals search engine

CONTENTS

1. OVERVIEW 1

2. INSTALLATION AND WIRING 3
   - Mounting the Controller 3
   - High Current Connections and Wiring Guidelines 6
   - Low Current Connections and Wiring Guidelines 8
   - Controller Wiring: Basic Configuration 12
   - Switch Input Wiring 13
   - Throttle Wiring 13
   - Input/Output Specifications 18

3. PROGRAMMABLE PARAMETERS 25
   - Program Menu 26

4a. MONITOR MENU 72

4b. CONTROLLER INFORMATION MENU 86

5. INITIAL SETUP 87

6a. MOTOR CHARACTERIZATION: ACIM Motors 93

6b. MOTOR CHARACTERIZATION: SPM Motors 100

7. TUNING GUIDE 102

8. VEHICLE CONTROL LANGUAGE 106

9. DIAGNOSTICS AND TROUBLESHOOTING 137

10. MAINTENANCE 145

APPENDIX A Vehicle Design Considerations

APPENDIX B EN13849 Compliance

APPENDIX C Programming Devices

APPENDIX D Specifications, 1232E/34E/36E/38E and 1232SE/34SE/36SE Controllers

Downloaded from www.Manualslib.com manuals search engine

FIGURES

FIG. 1: Curtis 1232E/SE, 1234E/SE, 1236E/SE, 1238E controllers ... 1
FIG. 2a: Mounting dimensions, Curtis 1232E/SE controller ... 3
FIG. 2b: Mounting dimensions, Curtis 1234E/SE controller ... 4
FIG. 2c: Mounting dimensions, Curtis 1236E/SE, 1238E controllers ... 5
FIG. 3: Basic wiring diagram ... 12
FIG. 4: Wiring for Type 1 throttles ... 14
FIG. 5: Wiring for Type 2 throttles ... 15
FIG. 6: Wiring for Type 3 throttles ... 16
FIG. 7: Acceleration response rate diagram ... 33
FIG. 8: Braking response rate diagram ... 34
FIG. 9: Throttle mapping, torque control mode ... 40
FIG. 10: Effect of gear soften parameter, torque control mode ... 40
FIG. 11: Effect of brake taper speed parameter, torque control mode ... 40
FIG. 12: Drive current limiting map ... 42
FIG. 13: Regen current limiting map ... 43
FIG. 14: Throttle adjustment ... 45
FIG. 15: VCL motor command diagram ... 114
FIG. 16: VCL control mode processing ... 118
FIG. 17: VCL proportional driver processing ... 119

FIG. B-1: Enhanced supervisory system ... B-1

TABLES

TABLE 1: High current connections ... 6
TABLE 2: Low current connections ... 9
TABLE 3: Programmable parameter menus ... 26
TABLE 4: Monitor menu ... 72
TABLE 5: Types of LED display ... 135
TABLE 6: Troubleshooting chart ... 136

TABLE D-1: Specifications, 1232E/34E/36E/38E and 1232SE/34SE/36SE controllers ... D-1

Downloaded from www.Manualslib.com manuals search engine

1 OVERVIEW

Curtis 1232E/SE, 1234E/SE, 1236E/SE, and 1238E AC motor controllers provide accurate, dependable, and highly efficient control of speed and torque of AC induction motors (ACIM) and surface permanent magnet synchronous motors (SPM).

These AC controllers contain two microprocessors to provide exceptional capability and functional safety. The primary microprocessor runs an advanced field-oriented AC motor control while simultaneously running VCL software in an embedded logic controller. The second microprocessor continuously monitors the operation of the system, redundantly measuring inputs, crosschecking results, and verifying critical timing and operations.

VCL (Vehicle Control Language) is an innovative software programming language developed by Curtis. Many electric vehicle functions are uniquely built into the VCL code, and additional functions can be created by OEMs as required. VCL opens new avenues of customization, allowing specific vehicle application functions to be created quickly and easily within the motor controller itself, often eliminating the need to use separate vehicle manager modules.

The CAN bus communications included within these controllers allow these AC motor controllers to function as system CAN masters or CAN slaves as part of an efficient distributed system. Inputs and outputs can be optimally shared throughout the system, minimizing wiring and creating integrated functions that often reduce the cost of the system.

These controllers are the ideal solution for traction, hoist, dual drive, and other motor drive and vehicle control needs.

Fig. 1 *Curtis AC induction motor controllers:*
from left to right, models 1232SE, 1234E, 1236E, and 1238E.
The E and SE models look similar, and share the same standard features.

Like all Curtis controllers, the E and SE models offer superior operator control of motor drive performance. **Features include:**

- ✓ Closed-loop speed and torque control for both induction (ACIM) and surface permanent magnet (SPM) motors
- ✓ High efficiency, field-oriented motor control algorithms that enable maximum possible motor torque generation for all operating conditions

More Features ☞

Downloaded from www.Manualslib.com manuals search engine

- ✓ Advanced Pulse Width Modulation technology for efficient use of battery voltage, low motor harmonics, low torque ripple, and minimized switching losses
- ✓ Extremely wide torque/speed range including full regeneration capability
- ✓ Full field-weakening capability with ACIM motors; full control up to no-load base speed with SPM motors
- ✓ Smooth low speed control, including zero speed
- ✓ Adaptation of control algorithm to motor temperature variation for optimal performance and reduced motor heating
- ✓ Power limiting maps allow performance customization for reduced motor heating and consistent performance over varying battery state-of-charge
- ✓ Thermal cutback, warning, and automatic shutdown provide protection to motor and controller
- ✓ Insulated metal substrate power base provides superior heat transfer for increased reliability
- ✓ Built-in auto-characterization routines for effective in-vehicle optimization of motor performance and efficiency
- ✓ Powerful operating system allows parallel processing of vehicle control tasks, motor control tasks, and user configurable programmable logic (VCL)
- ✓ A wide range of I/O can be applied wherever needed, for maximum distributed system control
- ✓ Built-in Dual Drive software allows easy setup and control of typical dual-drive vehicles, without VCL
- ✓ Internal battery-state-of-charge, hourmeter, and maintenance timers
- ✓ CANopen compatible CAN bus connection; other CAN bus protocols are configurable through VCL
- ✓ Significantly increased CAN master capabilities, VCL execution speed, and VCL code space
- ✓ Field-programmable, with flash downloadable main operating code
- ✓ Easily programmable through the Curtis 1313 handheld programmer and 1314 PC Programming Station
- ✓ Rugged sealed housing and connectors meet IP65 environmental sealing standards for use in harsh environments
- ✓ Compliance with new Machinery Directives 2006/42/EC and EN13849-1.

Getting the most out of your Curtis controller

Read and apply the information in this manual. The Installation/Wiring, Initial Setup, and Tuning Guide sections are critical to proper operation of your controller. For technical support, contact the Curtis distributor where you obtained your controller or the Curtis sales-support office in your region.

Downloaded from www.Manualslib.com manuals search engine

2 INSTALLATION AND WIRING

MOUNTING THE CONTROLLER

The outline and mounting hole dimensions for the 1232E/SE controller are shown in Figure 2a, for the 1234E/SE controller in Figure 2b, and for the 1236E/SE and 1238E controllers in Figure 2c. When an Ampseal plug housing is mated with the 35-pin logic receptacle, these controllers meet the IP65 requirements for environmental protection against dust and water. Nevertheless, in order to prevent external corrosion and leakage paths from developing, **the mounting location should be carefully chosen to keep the controller as clean and dry as possible**.

It is recommended that the controller be fastened to a clean, flat metal surface with four 6 mm (1/4") diameter bolts, using the holes provided. A thermal joint compound can be used to improve heat conduction from the controller heatsink to the mounting surface. Additional heatsinking or fan cooling may be necessary to meet the desired continuous ratings.

Fig. 2a *Mounting dimensions, Curtis 1232E and 1232SE motor controllers.*

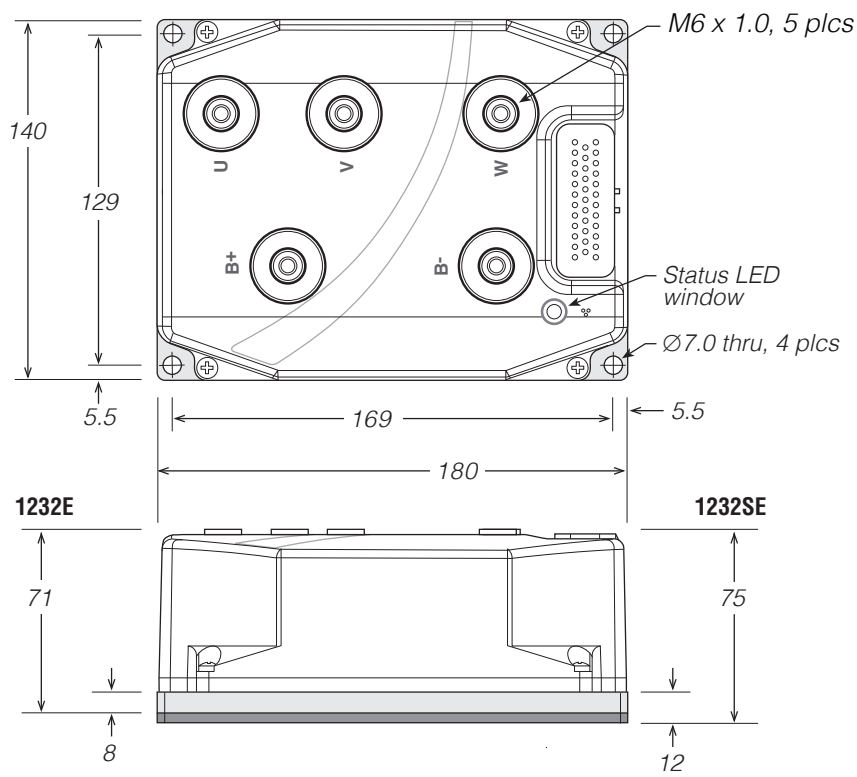

Note: The SE has a thicker base.
Dimensions in millimeters.

Downloaded from www.Manualslib.com manuals search engine

Fig. 2b *Mounting dimensions, Curtis 1234E and 1234SE motor controllers.*

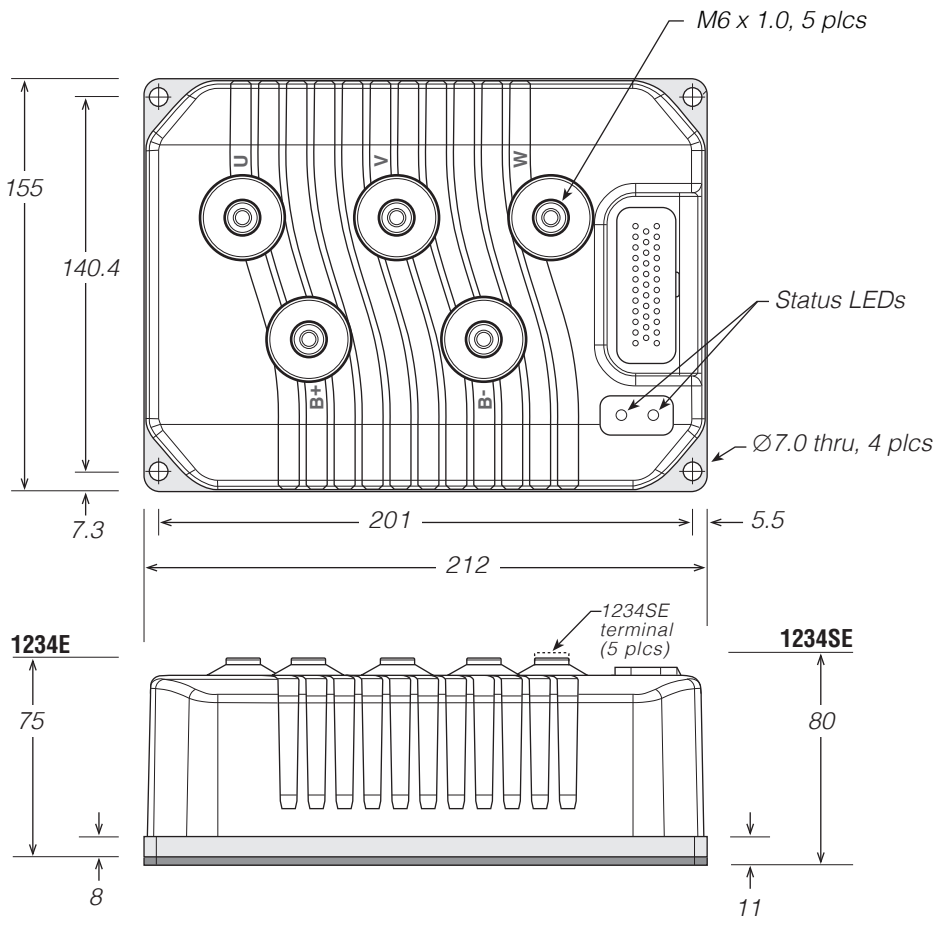

Note: The SE has a thicker base and taller terminals.
Dimensions in millimeters.

CAUTION

Working on electrical systems is potentially dangerous. Protect yourself against uncontrolled operation, high current arcs, and outgassing from lead acid batteries:

UNCONTROLLED OPERATION — Some conditions could cause the motor to run out of control. Disconnect the motor or jack up the vehicle and get the drive wheels off the ground before attempting any work on the motor control circuitry.

HIGH CURRENT ARCS — Batteries can supply very high power, and arcing can occur if they are short circuited. Always open the battery circuit before working on the motor control circuit. Wear safety glasses, and use properly insulated tools to prevent shorts.

LEAD ACID BATTERIES — Charging or discharging generates hydrogen gas, which can build up in and around the batteries. Follow the battery manufacturer's safety recommendations. Wear safety glasses.

Downloaded from www.Manualslib.com manuals search engine

Fig. 2c *Mounting dimensions, Curtis 1236E/SE and 1238E motor controllers.*

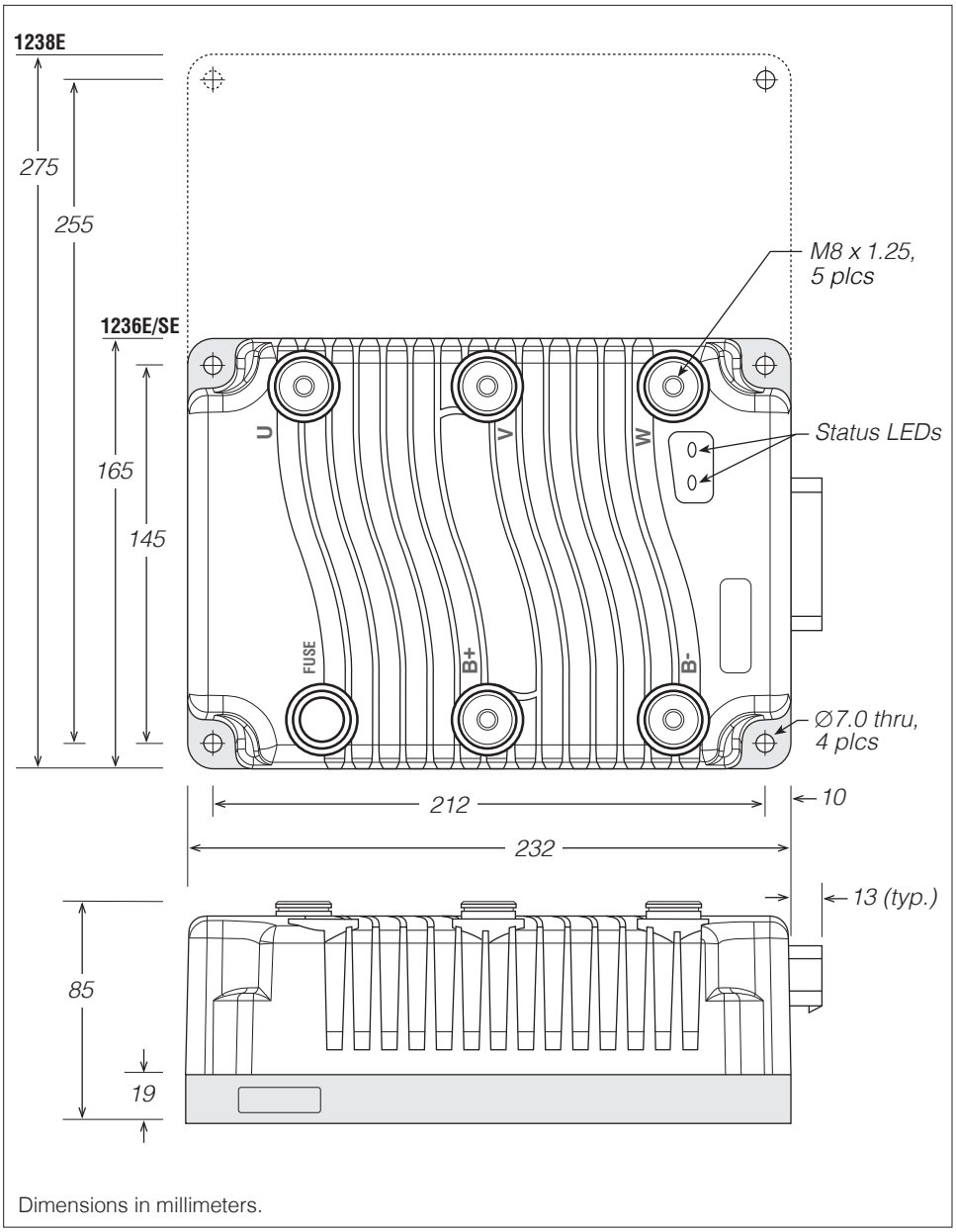

You will need to take steps during the design and development of your end product to ensure that its EMC performance complies with applicable regulations; suggestions are presented in Appendix A.

These controllers contain **ESD-sensitive components**. Use appropriate precautions in connecting, disconnecting, and handling the controller. See installation suggestions in Appendix A for protecting the controller from ESD damage.

Downloaded from www.Manualslib.com manuals search engine

HIGH CURRENT CONNECTIONS

There are five high-current terminals, identified on the controller housing as **B+**, **B-**, **U**, **V**, and **W**.

Table 1 High Current Connections

TERMINAL	FUNCTION
B+	Positive battery to controller.
B-	Negative battery to controller.
U	Motor phase U.
V	Motor phase V.
W	Motor phase W.

Lug assembly: 1232E/SE and 1234E/SE models

Five aluminum M6 terminals are provided. Lugs should be installed as follows, using M6 bolts sized to provide proper engagement (see diagram):

- Place the lug on top of the aluminum terminal, followed by a high-load safety washer with its convex side on top. The washer should be a SCHNORR 416320, or equivalent.
- If two lugs are used on the same terminal, stack them so the lug carrying the least current is on top.
- Tighten the assembly to 10.2 ±1.1 N·m (90 ±10 in-lbs).

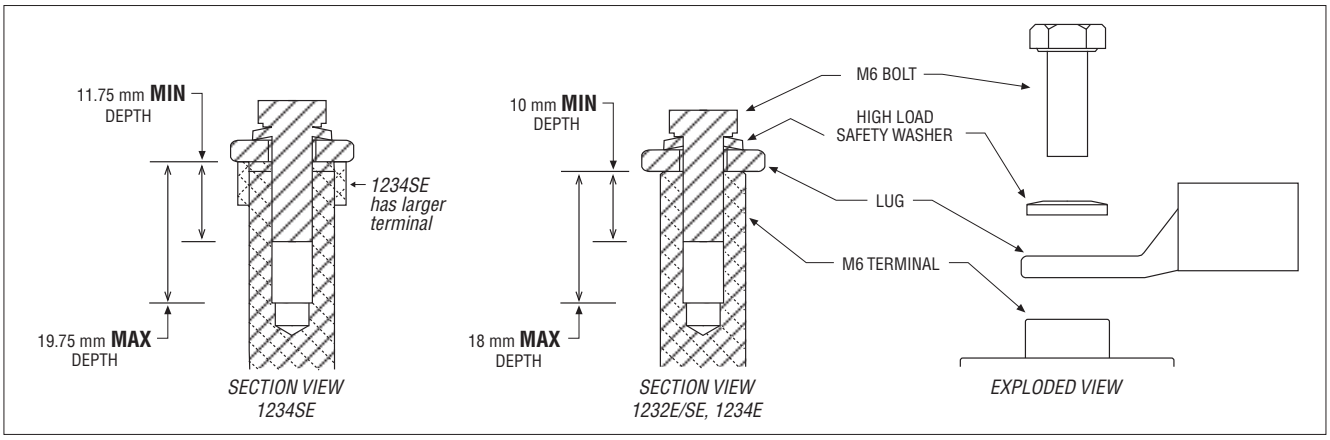

Downloaded from www.Manualslib.com manuals search engine

Lug assembly: 1236E/SE and 1238E models

Five M8 terminals are provided. Lugs should be installed as follows, using M8 bolts sized to provide proper engagement (see diagram):

- Place the lug on top of the terminal, followed by a safety washer with its convex side on top. The washer should be a SCHNORR 700800, or equivalent.
- If two lugs are used on the same terminal, stack them so the lug carrying the least current is on top.
- Tighten the assembly to 9.6 ±0.9 N·m (85 ±8 in-lbs).

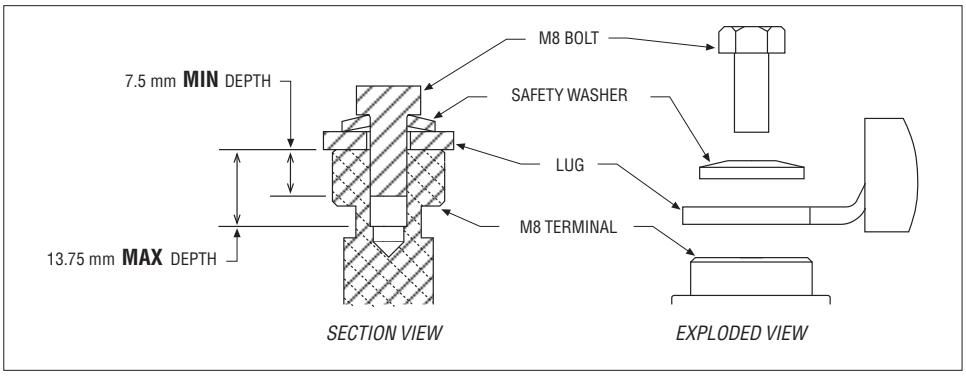

High current wiring recommendations: all models

Battery cables (**B+**, **B-**)

These two cables should be run close to each other between the controller and the battery. Use high quality copper lugs and observe the recommended torque ratings. For best noise immunity the cables should not run across the center section of the controller. With multiple high current controllers, use a star ground from the battery **B-** terminal.

Motor wiring (**U**, **V**, **W**)

The three phase wires should be close to the same length and bundled together as they run between the controller and the motor. The cable lengths should be kept as short as possible. Use high quality copper lugs and observe the recommended torque ratings. For best noise immunity the motor cables should not run across the center section of the controller. In applications that seek the lowest possible emissions, a shield can be placed around the bundled motor cables and connected to the **B-** terminal at the controller. Typical installations will readily pass the emissions standards without a shield. Low current signal wires should not be run parallel to the motor cables. When necessary they should cross the motor cables at a right angle to minimize noise coupling.

Downloaded from www.Manualslib.com manuals search engine

LOW CURRENT CONNECTIONS

All low power connections are made through a single 35-pin AMPSEAL connector. The mating plug housing is AMP p/n 776164-1 and the contact pins are AMP p/n 770520-3. The connector will accept 20 to 16 AWG wire with a 1.7 to 2.7mm diameter thin-wall insulation.

The 35 individual pins are characterized in Table 2.

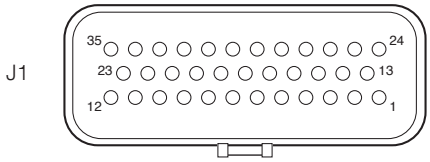

Low current wiring recommendations

Position feedback (Pins 7, 26, 31, 32)

All four wires (+5V, Feedback A, Feedback B, and I/O ground) should be bundled together as they run between the motor and controller logic connector. These can often be run with the rest of the low current wiring harness. The encoder cables should not be run near the motor cables. In applications where this is necessary, shielded cable should be used with the ground shield connected to the I/O ground (pin 7) at only the controller side. In extreme applications, common mode filters (e.g. ferrite beads) could be used.

CAN bus (Pins 21, 23, 34, 35)

It is recommended that the CAN wires be run as a twisted pair. However, many successful applications at 125 kbit/s are run without twisting, simply using two lines bundled in with the rest of the low current wiring. CAN wiring should be kept away from the high current cables and cross them at right angles when necessary.

All other low current wiring

The remaining low current wiring should be run according to standard practices. Running low current wiring parallel to the high current wiring should always be avoided.

Downloaded from www.Manualslib.com manuals search engine

Table 2 Low Current Connections

PIN	NAME	DESCRIPTION	RELATED VCL*	
			FUNCTIONS	REFERENCES
1	KSI	Keyswitch input. Provides logic power for the controller and power for the coil drivers.		Keyswitch_Voltage
2	Prop. Driver	Proportional driver. This is a coil driver with current control capability typically used for a proportional valve on a hydraulic manifold. Can also be used as a digital input.	Automate_PWM Put_PWM	Sw_13 PWM5 PD_Current PD_Output PD_Throttle VCL_PD_Throttle
3	Driver 4	Generic driver #4; can also be used as a digital input. Has low frequency PWM capabilities.	Automate_PWM Put_PWM	Sw_12 PWM4 PWM4_Output
4	Driver 3	Generic driver #3; can also be used as a digital input. Has low frequency PWM capabilities. Typically used for pump contactor.	Automate_PWM Put_PWM	Sw_11 PWM3 PWM3_Output
5	Driver 2	Generic driver #2; can also be used as a digital input. Has low frequency PWM capabilities and a slightly higher current rating.Typically used for electromagnetic brake.	Automate_PWM Put_PWM	Sw_10 PWM2 PWM2_Output
6	Driver 1	Generic driver #1; can also be used as a digital input. Has low frequency PWM capabilities. Typically used for main contactor.	Automate_PWM Put_PWM Set_Interlock Clear_Interlock	Sw_9 PWM1 PWM1_Output Interlock_State Main_State
7	I/O Ground	Input and output ground reference.		
8	Switch 2 Analog 2	Can be used as generic switch input #2 or as generic analog input #2. Typically used as the motor temperature analog input.		Sw_2 Analog2_Input Motor_Temperature
9	Switch 3	Generic switch input #3. Typically used as the interlock switch.		Sw_3
10	Switch 4	Generic switch input #4.		Sw_4
11	Switch 5	Generic switch input #5.		Sw_5

* The related VCL columns are vital when writing VCL code (see Section 8). VCL "functions" are used to access the various I/Os; VCL "references" are predefined names for specific pins.

Downloaded from www.Manualslib.com manuals search engine

Table 2 Low Current Connections, cont'd

PIN	NAME	DESCRIPTION	RELATED VCL	
			FUNCTIONS	REFERENCES
12	Switch 6	Generic switch input #6.		Sw_6
13	Coil Return	This is the coil return pin (at B+ potential) for all the contactor coils.		
14	Switch 16	Generic switch input #16.		Sw_16
15	Throttle Pot High	Pot high connection for a 3-wire throttle pot.		
16	Throttle Pot Wiper	Pot wiper connection for the throttle pot.	Setup_Pot Setup_Pot_Faults	Throttle_Pot_Raw
17	Pot2 Wiper	Pot wiper connection for the brake pot.	Setup_Pot Setup_Pot_Faults	Pot2_Raw
18	Pot Low	Common pot low connection for the throttle and brake pots.		Pot_Low_Output
19	Digital Out 6	An On/Off output driver. Can also be used as a digital input.	Set_DigOut Clear_DigOut	Sw_14 DigOut6 Dig6_Output
20	Digital Out 7	An On/Off output driver Can also be used as a digital input.	Set_DigOut Clear_DigOut	Sw_15 DigOut7 Dig7_Output
21	CAN Term H	High connection for the CAN termination jumper.		
22	Switch 7	Generic switch input #7. Typically used as the Forward switch.		Sw_7
23	CANH	CAN bus high.	Setup_CAN Setup_Mailbox Send_Mailbox etc.	
24	Switch 1 Analog 1	Can be used as generic switch input #1 or as generic analog input #1. Typically used for emergency reverse switch (if applicable).		Sw_1 Analog1_Input
25	+12V Out	Unregulated low power +12V output.		Ext_Supply_Current
26	+5V Out	Regulated low power +5V output.		5_Volts_Output Ext_Supply_Current
27	Pot2 High	Pot high connection for a 3-wire brake pot.		
28	Serial TX	Serial transmit line for display or flash update.	Setup_Serial	

Downloaded from www.Manualslib.com manuals search engine

Table 2 Low Current Connections, cont'd

PIN	NAME	DESCRIPTION	RELATED VCL	
			FUNCTIONS	REFERENCES
29	Serial RX	Serial receive line for flash update.	Setup_Serial	
30	Analog Output*	Low power, low frequency 0–10V analog output.	Automate_PWM Put_PWM	PWM6 Analog_Output
31	Position Feedback A	Quadrature encoder input phase A (ACIM motors). Sin/cos sensor input sine (SPM motors).		Motor_RPM MotorspeedA Encoder_Sin_Input_ Compensated
32	Position Feedback B	Quadrature encoder input phase B (ACIM motors). Sin/cos sensor input cosine (SPM motors).		Motor_RPM MotorspeedB Encoder_Cos_Input_ Compensated
33	Switch 8	Generic switch input #8. Typically used as the Reverse switch.		Sw_8
34	CAN Term L	Low connection for the CAN bus termination jumper.		
35	CANL	CAN bus low.	Setup_CAN Setup_Mailbox Send_Mailbox etc.	

*Pin 30 not connected on 1232E/SE controllers.

Downloaded from www.Manualslib.com manuals search engine

CONTROLLER WIRING: BASIC CONFIGURATION

A basic wiring diagram is shown in Figure 3. Throttle and brake are shown in the diagram as 3-wire potentiometers; other types of throttle and brake inputs are easily accommodated, and are discussed in the following throttle wiring section.

The main contactor coil must be wired directly to the controller as shown in Figure 3 to meet EEC safety requirements. The controller can be programmed

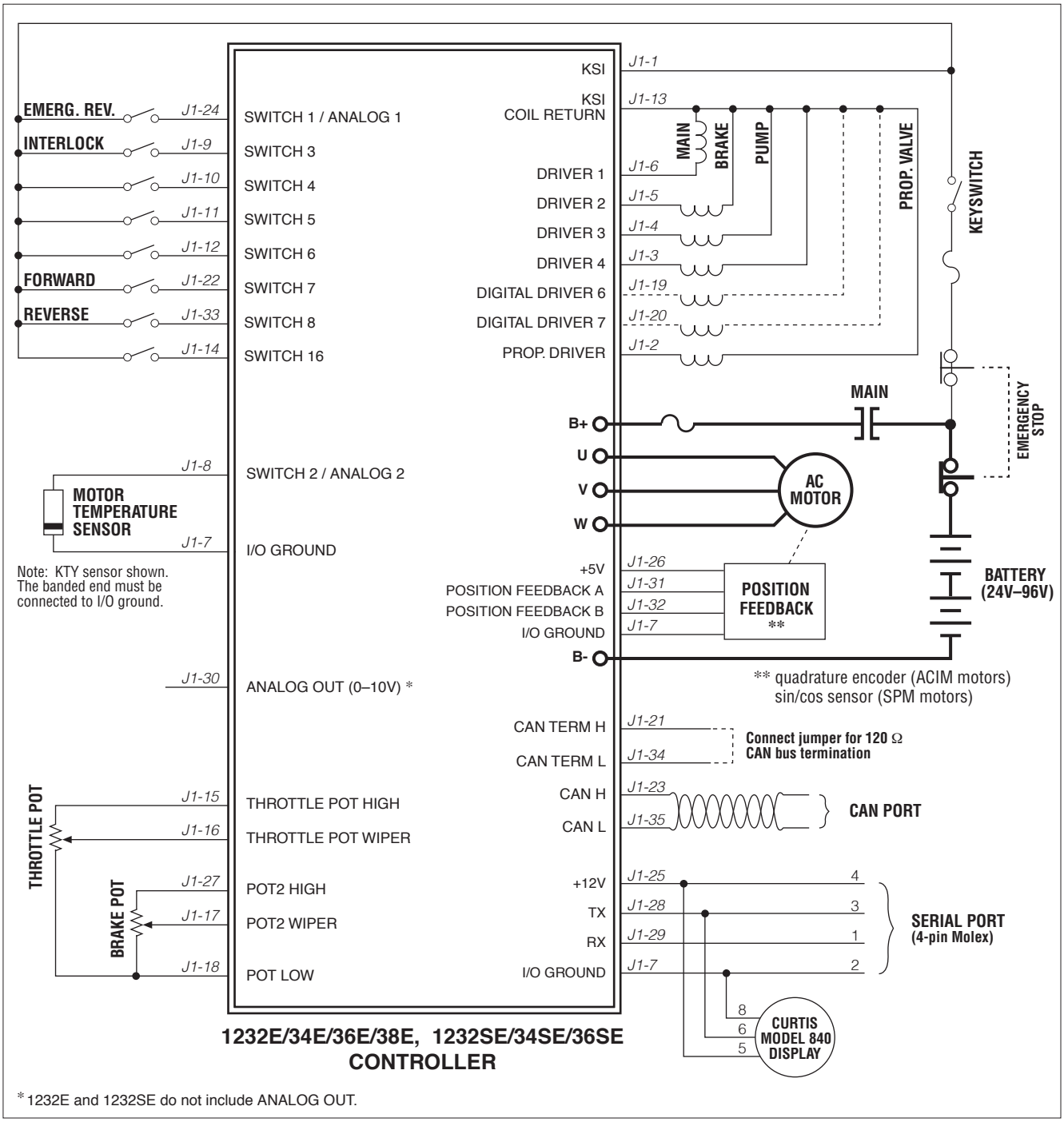

Fig. 3 *Basic wiring diagram, Curtis 1232E/SE, 34E/SE, 36E/SE, and 38E motor controllers.*

Downloaded from www.Manualslib.com manuals search engine

to check for welded or missing contactor faults and uses the main contactor coil driver output to remove power from the controller and motor in the event of various other faults. **If the main contactor coil is not wired to Pin 6 of the 35-pin connector as shown, the controller will not be able to open the main contactor in serious fault conditions and the system will therefore not meet EEC safety requirements.**

Note that the basic wiring diagram is designed for generic applications and may not fully meet the requirements of your system. These controllers have very flexible I/O and wiring configurations; you may wish to contact your Curtis distributor or support engineer to discuss your particular application.

SWITCH INPUT WIRING

The following inputs are dedicated to specific functions when the parameter settings are as shown:

Switch 1:	Emergency Reverse input if the EMR Enable = On and EMR Type = 0 or 2 (see page 68).
Switch 3:	Interlock input if Interlock Type = 0 (see page 50).
Switch 5:	Lift input (depends on VCL program).
Switch 6:	Lower input (depends on VCL program).
Switch 7:	Forward input if Throttle Type = 1–3 (see page 44).
Switch 8:	Reverse input if Throttle Type = 1–3 (see page 44).

THROTTLE WIRING

In this manual, the term *throttle* is used in two senses: as another name for the drive throttle, and as a generic term covering both the drive throttle and the brake throttle. Wiring is the same, whether the throttle in question is used for braking or for acceleration.

Various throttles can be used with these controllers. They are characterized as one of five types in the programming menu of the 1313/1314 programmer.

Type 1:	2-wire 5kΩ–0 potentiometers
Type 2:	single-ended 0–5V throttles, current source throttles, 3-wire potentiometers, and electronic throttles
Type 3:	2-wire 0–5kΩ potentiometers
Type 4:	wigwag 0–5V throttles and 3-wire potentiometers
Type 5:	VCL input (VCL_Throttle or VCL_Brake)

The two throttle inputs (drive throttle and brake throttle) are programmed independently.

Downloaded from www.Manualslib.com manuals search engine

For potentiometers, the controller provides complete throttle fault protection that meets all applicable EEC regulations. For voltage throttles, the controller protects against out-of-range wiper values, but does not detect wiring faults; it is therefore the responsibility of the OEM to provide full throttle fault protection in vehicles using voltage throttles.

Throttle types 1–3 use the forward and reverse inputs (switches 7 and 8) in addition to the throttle pot input to define the throttle command (see Figure 15, page 114). Throttle types 4 and 5 do not use the forward and reverse inputs.

Wiring for the most common throttles is described in the following text and shown in the accompanying illustrations. If a throttle you are planning to use is not covered, contact your Curtis distributor or support engineer.

Throttle Type 1

For these 2-wire resistive potentiometers, shown in Figure 4, full throttle request corresponds to 0 Ω measured between the pot wiper pin and the Pot Low pin.

Fig. 4 *Wiring for Type 1 throttles.*

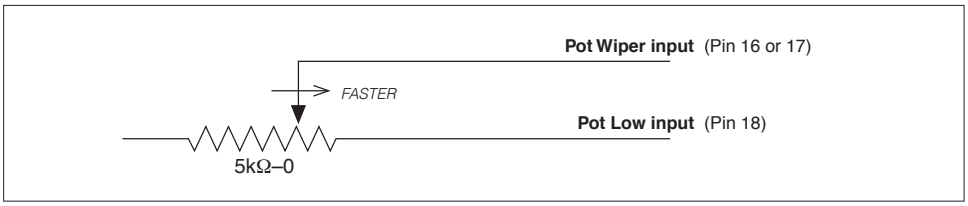

Broken wire protection is provided by the controller sensing the current flow from the pot wiper input (pin 16 or 17) through the potentiometer and into Pot Low (pin 18). If the Pot Low input current falls below 0.65 mA, a throttle fault is generated and the throttle request is zeroed. Note: Pot Low (pin 18) must not be tied to ground (B-).

Throttle Type 2

With these throttles, the controller looks for a voltage signal at the wiper input. Zero throttle request corresponds to 0 V and full throttle request to 5 V. A variety of devices can be used with this throttle input type, including voltage sources, current sources, 3-wire pots, and electronic throttles. The wiring for each is slightly different, as shown in Figure 5, and they have varying levels of throttle fault protection.

When a voltage source is used as a throttle, it is the responsibility of the OEM to provide appropriate throttle fault detection. For ground-referenced 0–5V throttles, the controller will detect open breaks in the wiper input but cannot provide full throttle fault protection.

To use a current source as a throttle, a resistor must be added to the circuit to convert the current source value to a voltage; the resistor should be sized to provide a 0–5V signal variation over the full current range. It is the responsibility of the OEM to provide appropriate throttle fault detection.

Downloaded from www.Manualslib.com manuals search engine

Fig. 5 *Wiring for Type 2 throttles.*

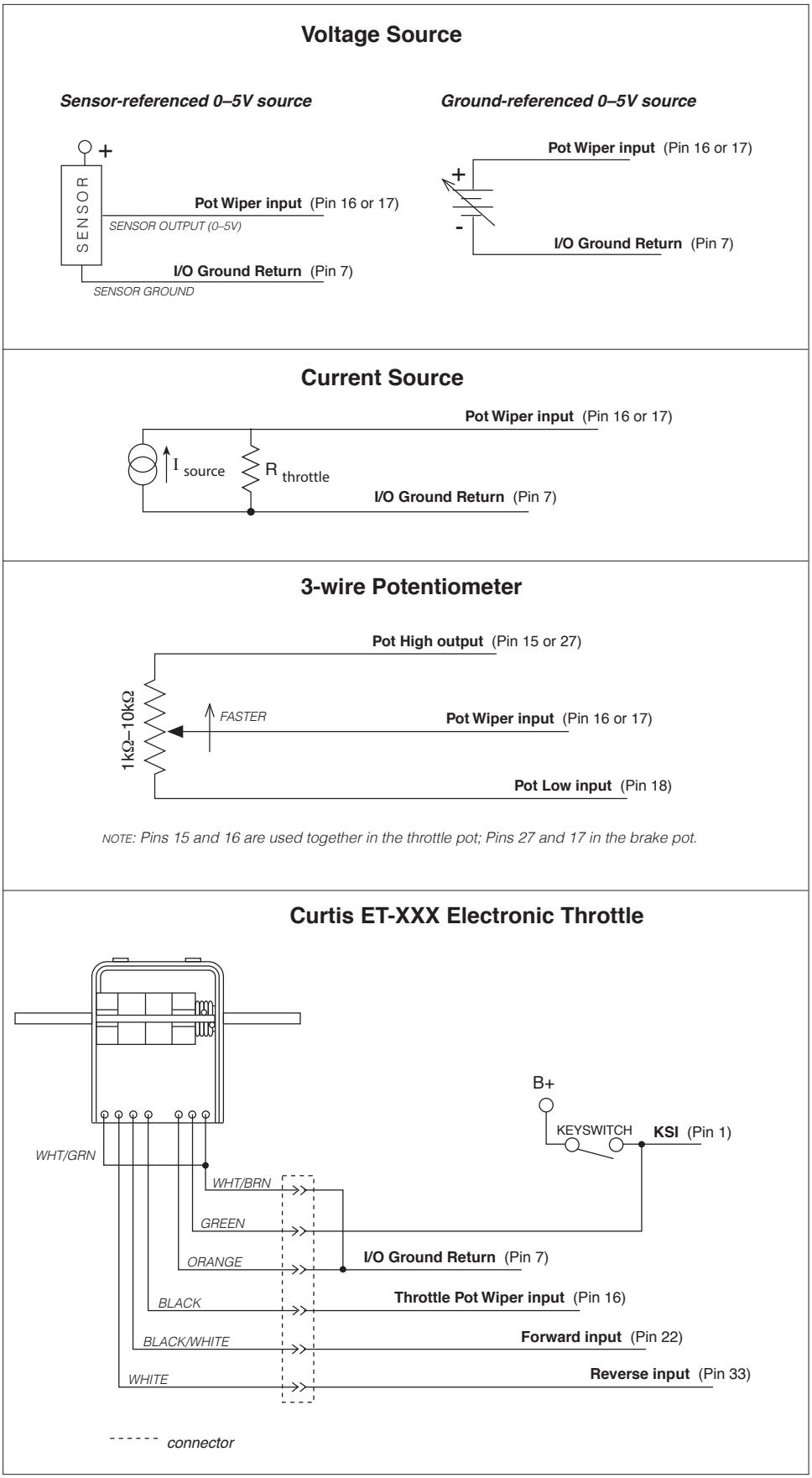

Downloaded from www.Manualslib.com manuals search engine

When a 3-wire potentiometer is used, the controller provides full fault protection in accordance with EEC requirements. The pot is used in its voltage divider mode, with the controller providing the voltage source and return. Pot High provides a current limited 5V source to the pot, and Pot Low provides the return path. This is the throttle shown in the basic wiring diagram (Figure 3) for the drive throttle and for the brake throttle.

The ET-XXX electronic throttle is typically used only as a drive throttle. The ET-XXX contains no built-in fault detection, and the controller will detect only open wiper faults. It is the responsibility of the OEM to provide any additional throttle fault detection necessary.

Throttle Type 3

For these 2-wire resistive potentiometers, shown in Figure 6, full throttle request corresponds to 5 kΩ measured between the pot wiper pin and the Pot Low pin.

Fig. 6 *Wiring for Type 3 throttles.*

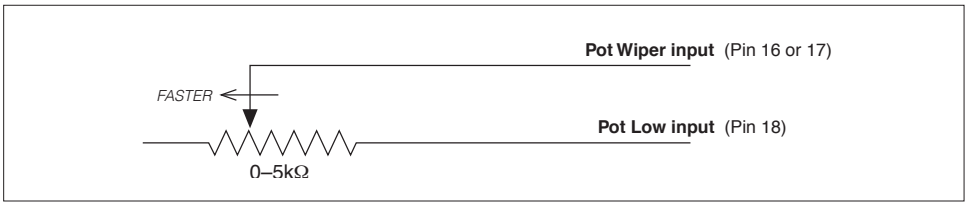

Broken wire protection is provided by the controller sensing the current flow from the wiper input (pin 16 or 17) through the potentiometer and into Pot Low (pin 18). If the Pot Low input current falls below 0.65 mA, a throttle fault is generated and the throttle request is zeroed. Note: Pot Low (pin 18) must not be tied to ground (B-).

Throttle Type 4

Type 4 throttles operate in wigwag style. No signals to the controller's forward and reverse inputs are required; the direction is determined by the wiper input value. Only 0–5V voltage sources and 3-wire potentiometers can be used as Type 4 throttles. The controller interface for Type 4 throttles is the same as for the corresponding Type 2 throttles; see Figure 5.

In a Type 4 throttle, the neutral point must be set up somewhere in the center of the throw, with increasing voltage beyond this point providing increasing forward command and voltages below this point providing increasing reverse command. For example, you might set the Forward Deadband at 2.6 V with Forward Max at 4 V, and Reverse Deadband at 2.4 V with Reverse Max at 1 V.

When a 3-wire pot is used, the controller provides full fault protection. When a voltage throttle is used, the controller will detect open breaks in the wiper input but cannot provide full throttle fault protection.

Downloaded from www.Manualslib.com manuals search engine

Throttle Type 5

Throttle Type 5 provides a different way of sending the throttle command to the controller. This throttle type uses VCL to define the throttle signal that will be "input" into the throttle signal chain (see Figure 15, page 114). This throttle type can be used for either the drive throttle or the brake throttle by using the VCL variables VCL_Throttle and VCL_Brake. How the VCL program is written will determine the source of the throttle signal, making this a very flexible throttle input method. VCL can be written to use the throttle pot inputs, switch inputs, or CAN communication messages as the source of the throttle signals. If you have questions regarding this throttle type, contact your Curtis distributor or support engineer.

Setting the Throttle Type to Type 5 also allows the throttle and brake pot inputs to be redefined by a VCL program for uses other than throttle or brake input.

Downloaded from www.Manualslib.com manuals search engine

INPUT/OUTPUT SIGNAL SPECIFICATIONS

The input/output signals wired to the 35-pin connector can be grouped by type as follows; their electrical characteristics are discussed below.

— digital inputs

— digital and PWM outputs

— analog inputs

— analog output

— power supply outputs

— KSI and coil return inputs

— throttle and brake inputs

— communications port inputs/outputs

— position feedback inputs.

Digital inputs

These control lines can be used as digital (on/off) inputs. Normal "on" connection is direct to B+; "off" is direct to B-. Input will pull low (off) if no connection is made. All digital inputs are protected against shorts to B+ or B-.

Nine of these lines (Switches 1–8, 16) are designed to pull current to keep switch contacts clean and prevent leakage paths from causing false signals.

The remaining lines are digital inputs associated with driver outputs; note that they have much higher input impedances. The two digital output lines can also be read as inputs, and are therefore included in this group.

The lines at pins 24 and 8 can also be used as analog inputs, and are included in that group as well.

Downloaded from www.Manualslib.com manuals search engine

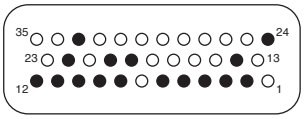

DIGITAL INPUT SPECIFICATIONS					
SIGNAL NAME	PIN	LOGIC THRESHOLDS	INPUT IMPEDANCE*	VOLTAGE RANGE†	ESD TOLERANCE
Switch 1	24	Rising edge= 4.4 V max Falling edge= 1.5 V min	*24-36V models:* 7.0 kΩ, 7.2 kΩ *36-48V models:* 10.8 kΩ, 11.2 kΩ *48-80V models:* 25.2 kΩ, 27.3 kΩ *72-96V models:* n/a, 29.4 kΩ	-10 V to (MaxV + 10 V)	±8 kV (direct strike)
Switch 2	8				
Switch 3	9				
Switch 4	10				
Switch 5	11				
Switch 6	12				
Switch 7	22				
Switch 8	33				
Switch 16	14				
Digital Out 6	19		150 kΩ to 300 kΩ	-0.5 V to (MaxV + 10 V)	
Digital Out 7	20				
Driver 1	6				
Driver 2	5				
Driver 3	4				
Driver 4	3				
Prop Driver	2				

* *The first value is for 1232E/SE and 1234E/SE controllers, and the second value is for 1236E/SE and 1238E controllers.*

† *"MaxV" in this and the following tables is the controller's maximum voltage; see Table D-1 for the maximum voltage of each model.*

Note: The voltage at the switch inputs 3–8 and 16 must be above the high threshold or below the low threshold for proper operation. Allowing these inputs to fall between these thresholds for more than 100 milliseconds could result in a Supervisor Fault (fault code 77).

DIGITAL INPUT IMPEDANCE CIRCUITS

1232E/SE and 1234E/SE controllers

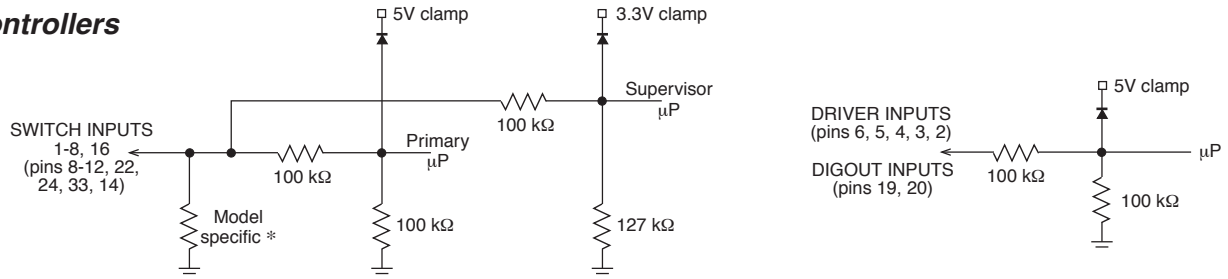

* 24-36V models = 7.5 kΩ, 36-48V = 12 kΩ, 48-80V = 33 kΩ

1236E/SE and 1238E controllers

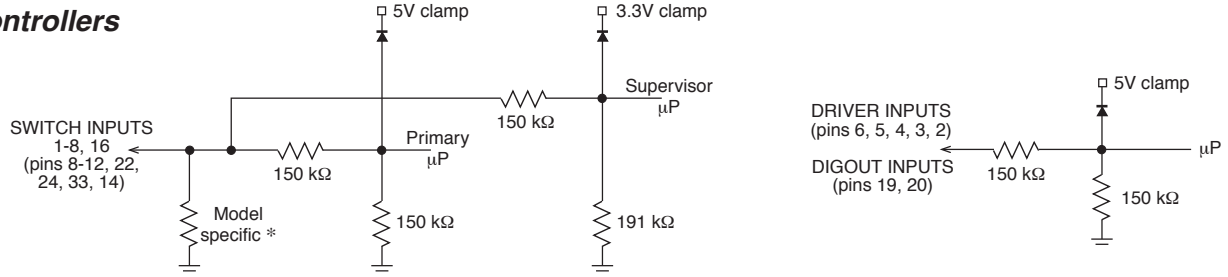

* 24-36V models = 7.5 kΩ, 36-48V = 12 kΩ, 48-80V = 33 kΩ, 72-96V = 36 kΩ

Downloaded from www.Manualslib.com manuals search engine

Digital and PWM outputs

Seven output drivers are available. One of these, the proportional driver, can be operated in a current control mode for driving a proportional valve or similar load. The frequency of this driver is normally 18 kHz, but this output can also serve to drive an electronic speedometer or tachometer using the VCL function Automate_Frequency_Output(); see page 133.

Each output can be independently turned on continuously (low level) or pulse width modulated to set the average output voltage. These outputs are intended to drive inductive loads such as contactors and electromagnetic brakes but could also be used to drive resistive loads if peak current ratings are not exceeded. All these outputs are protected against shorts to B+ or B-. All inductive loads should be connected to the coil return (pin 13), which provides flyback diode protection. These lines can also be used as digital inputs, and are included in that group as well.

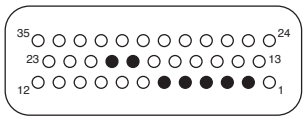

DIGITAL AND PWM OUTPUT SPECIFICATIONS							
SIGNAL NAME	PIN	PWM	PV CURRENT	FREQ-UENCY	OUTPUT CURRENT	PROTECTED VOLTAGE	ESD TOLERANCE
Driver 1	6	0 to 100% duty cycle	n/a	120 to 1000 Hz *	2 A max	-0.5 V to (MaxV + 10 V)	±8 kV (direct strike)
Driver 2	5				3 A max		
Driver 3	4				2 A max		
Driver 4	3						
Prop Driver	2		0 to 2 A in 607 nominal steps	18 kHz			
Digital Out 6	19	on/off	n/a	n/a	1 A max		
Digital Out 7	20						

* Drivers 1–4 frequency is set by the PWM Frequency parameter.

Analog inputs

Two control lines can be used as analog inputs. Both inputs are protected against shorts to B+ or B-.

Typically Analog 2 is used as the input for the motor temperature sensor. This input provides a constant current appropriate for a thermistor sensor. Some standard predefined motor temperature sensors are supported in software (see Sensor Type parameter, page 63). Note: The industry standard KTY temperature sensors are silicon temperature sensors with a polarity band; **the polarity band of a KTY sensor must be the end connected to I/O Ground** (pin 7).

These lines can also be used as digital inputs, and are included in that group as well (see page 19).

Downloaded from www.Manualslib.com manuals search engine

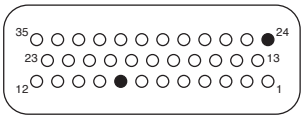

ANALOG INPUT SPECIFICATIONS					
SIGNAL NAME	PIN	OPERATING VOLTAGE	INPUT IMPEDANCE*	PROTECTED VOLTAGE	ESD TOLERANCE
Analog 1	24	0 to 10 V in 1024 steps	*24-36V models:* 6.9 kΩ, 7.1 kΩ *36-48V models:* 10.5 kΩ, 11.0 kΩ *48-80V models:* 23.8 kΩ, 28.1 kΩ *72-96V models:* n/a, 28.1 kΩ	-10 V to (MaxV + 10 V)	±8 kV (direct strike)
Analog 2	8				

* *The first value is for 1232E/SE and 1234E/SE controllers, and the second value is for 1236E/SE and 1238E controllers.*

Analog output

A single line is available as a low power analog output and is intended to drive instrumentation such as a battery discharge indicator. This output is generated from a filtered PWM signal and has about 1% ripple. The 2% settling time is <25ms for a 0–5V step and <30 ms for a 0–10V step. This output line is protected against shorts to B+ or B-. Note: The 1232E/SE has no analog output.

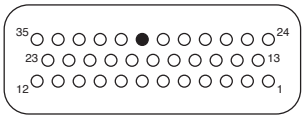

ANALOG OUTPUT SPECIFICATIONS					
SIGNAL NAME	PIN	OUTPUT VOLTAGE	OUTPUT CURRENT	PROTECTED VOLTAGE	ESD TOLERANCE
Analog Out	30	0 to 10 V	10 mA	-1 V to (MaxV + 10 V)	±8 kV (direct strike)

Power supply outputs

Two lines provide auxiliary output power for low power circuits such as electronic throttles, LED indicators, displays, position encoder, and remote I/O boards. I/O Ground (at pin 7) is the return line for these low power devices. Both power supply outputs are protected against shorts to B+ or B-.

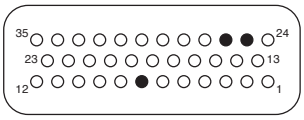

POWER SUPPLY OUTPUT SPECIFICATIONS					
SIGNAL NAME	PIN	OUTPUT VOLTAGE	OUTPUT CURRENT	PROTECTED VOLTAGE	ESD TOLERANCE
+12V Out	25	11.5 to 14.5 V	200 mA max (combined total)	-1 V to (MaxV + 10 V)	±8 kV (direct strike)
+5V Out	26	5 V ±5%			
I/O Ground	7	n/a	500 mA max	not protected	

Downloaded from www.Manualslib.com manuals search engine

KSI and coil return

KSI input provides power for all low power control circuits, power capacitor precharge (before main contactor turn on), power supply outputs, and high power output drivers. Battery voltage is sensed on the input for the VCL battery discharge function.

Coil Return should be wired to the positive battery side of the contactors being driven so that switching noise associated with PWM operation of the contactors is localized to the contactor wiring only.

It is important to maintain the division between KSI and coil return in order to ensure reverse polarity protection (vehicle wiring correct, battery terminals reversed).

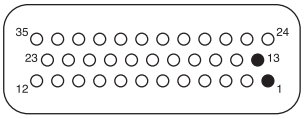

KSI AND COIL RETURN INPUT SPECIFICATIONS					
SIGNAL NAME	PIN	OPERATING VOLTAGE	INPUT CURRENT	PROTECTED VOLTAGE	ESD TOLERANCE
KSI	1	Between under- and overvoltage cutbacks	13 A max * continuous	±(MaxV + 10 V)	±8 kV (direct strike)
Coil Return	13		10 A or 12 A max **	(KSI-0.3 V) to (MaxV + 10 V)	

* Including current from the coil return (pin 13).

** 12 A for 1236E/SE and 1238E; 10 A for 1232E/SE and 1234E/SE.

Throttle and brake inputs

The two pot inputs are independently programmable to allow use of a voltage throttle or a 2-wire or 3-wire resistance throttle. Voltage throttles require only the Pot Wiper input (with I/O Ground for the return line). Resistance throttles require Pot Wiper and Pot Low (2-wire) or Pot High, Pot Wiper, and Pot Low (3-wire). All throttle I/O is protected against shorts to B+ or B-.

Alternatively, these two inputs can be used for analog signals other than the throttle and brake pot inputs. Configuring the inputs for use with other signals requires VCL programming; see Section 8.

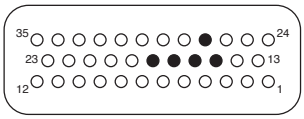

THROTTLE INPUT SPECIFICATIONS						
SIGNAL NAME	PIN	OPERATING VOLTAGE	INPUT IMPEDANCE	S/SINK CURRENT	PROTECTED VOLTAGE	ESD TOLERANCE
Throttle Pot High	15	0 V (shorted to Pot Low) 5 V (open circuit)	n/a	1 mA nominal (source)	-0.5 V to (MaxV + 10 V)	±8 kV (direct strike)
Pot2 High	27					
Throttle Pot Wiper	16	0 to 6.25 V	100 kΩ min	0.76 mA nominal (source, 2-wire)		
Pot2 Wiper	17					
Pot Low	18	0 to 0.25 V	20 Ω nom.	Faults if above 15 mA (sink)	-1 V to (MaxV + 10 V)	

Downloaded from www.Manualslib.com manuals search engine

Communications ports

Separate CAN and serial ports provide complete communications and programming capability for all user available controller information.

The Curtis 1313 handheld and 1314 PC programmers plug into a connector wired to pins 28 and 29, along with ground (pin 7) and the +12V power supply (pin 25); see wiring diagram, Figure 3. The Curtis Model 840 display can plug into the same 4-pin connector.

Wiring the CAN Term H and CAN Term L pins together provides a local CAN termination of 120 Ω, 0.5 W; keep the length of these wires short. CAN Term H and CAN Term L should never be connected to any external wiring.

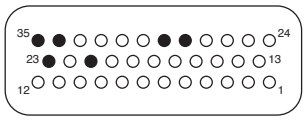

COMMUNICATIONS PORT SPECIFICATIONS					
SIGNAL NAME	PIN	SUPPORTED PROTOCOL/DEVICES	DATA RATE	PROTECTED VOLTAGE	ESD TOLERANCE
CANH	23	CANopen, other 11-bit or 29-bit identifier protocols	up to 1 Mbit/s	-5 V to (MaxV + 10 V)	±8 kV (direct strike)
CANL	35				
CAN Term H	21			(no connection to external wiring)	
CAN Term L	34				
Serial TX	28	Curtis 840 Display, 1313 Handheld Programmer, 1314 PC Programming Station	as required, 9.6 to 56 kbit/s	-0.3 to 12 V	
Serial RX	29				

Position feedback input: quadrature encoder

Two control lines are internally configured to read a quadrature type position encoder. The encoder is typically powered from the 5V supply (pin 26) or 12V supply (pin 25), but can be powered from any external supply (from 5 V up to B+) as long as the logic threshold requirements are met.

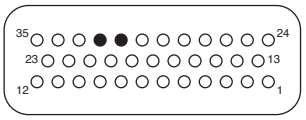

QUADRATURE ENCODER INPUT SPECIFICATIONS						
SIGNAL NAME	PIN	LOGIC THRESHOLDS	INPUT IMPEDANCE	MAX FREQ.	PROTECTED VOLTAGE	ESD TOLERANCE
Position Feedback A	31	Rising edge= 2.9 V max Falling edge= 2.0 V min	2 kΩ (internal pull-up to +4.5 V)	10 kHz	-5 V to (MaxV + 10 V)	±8 kV (direct strike)
Position Feedback B	32					
Phase Shift 90° ±30°; Duty Cycle 50% ±10%; no signal edge can be closer than 10 µs to an adjacent edge.						

These signal tolerances must be maintained over the controller's voltage and temperature ranges and the vehicle's speed range.

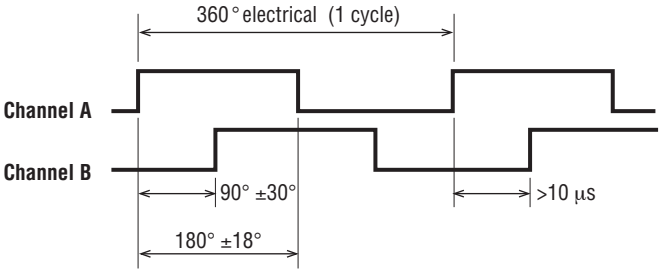

Downloaded from www.Manualslib.com manuals search engine

Position feedback input: sin/cos sensor

Two control lines are internally configured to read a sin/cos sensor. Position Feedback A (pin 31) provides the sine signal, and Feedback Position B (pin 32) provides the cosine signal. The device must be set up with one sensor revolution per mechanical revolution.

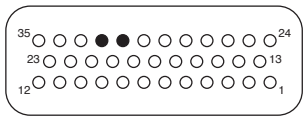

SIN/COS SENSOR INPUT SPECIFICATIONS						
SIGNAL NAME	PIN	OPERATING VOLTAGE	INPUT IMPEDANCE	MAX FREQ.	PROTECTED VOLTAGE	ESD TOLERANCE
Position Feedback A	31	0 to 5 V	150 kΩ for voltages ≤5 V; 75 kΩ for voltages >5 V	500 Hz	-5 V to (MaxV + 10 V)	±8 kV (direct strike)
Position Feedback B	32					

These signal tolerances must be maintained over the controller's voltage and temperature ranges and the vehicle's speed range. The sin/cos waveform peaks must be away from V_{dd} and ground by at least 0.5 V. In the example shown in the timing diagram below, V_{dd} = 5 V.

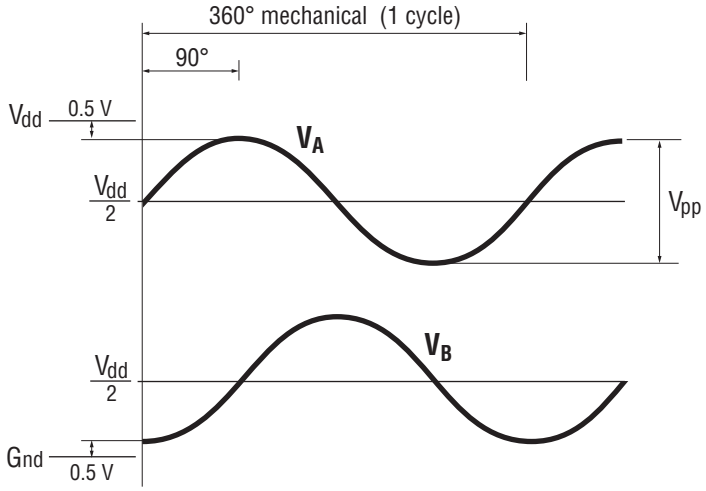

Downloaded from www.Manualslib.com manuals search engine

3 PROGRAMMABLE PARAMETERS

These controllers have a number of parameters that can be programmed using a Curtis 1313 handheld programmer or 1314 Programming Station. The programmable parameters allow the vehicle's performance to be customized to fit the needs of specific applications.

PROGRAMMING MENUS

The programmable parameters are grouped into nested hierarchical menus, as shown in Table 3.

Motor response tuning

Motor response characteristics can be tuned through speed control or through torque control, depending on the application. Use the Control Mode Select parameter (page 29) to select which tuning mode you will use:

- Speed Mode Express
- Speed Mode
- Torque Mode.

Speed Mode Express is a simplified version of Speed Mode with a reduced set of parameters that is adequate for most speed-controlled applications.

Use *Speed Mode* or *Speed Mode Express* for applications where throttle input corresponds to motor speed output.

Use *Torque Mode* for applications where throttle input corresponds to motor torque output.

Note: You can tune using torque control or speed control, but not both. For example, if you adjust a torque control parameter while Speed Mode or Speed Mode Express has been selected as your tuning mode, the programmer will show the new setting but it will have no effect.

We strongly urge you to read Section 5, Initial Setup, before adjusting any of the parameters.

Even if you opt to leave most of the parameters at their default settings, **it is imperative that you perform the procedures outlined in Section 5, which set up the basic system characteristics for your application**.

CAUTION

Parameter change faults

Parameters marked PCF in the menu charts will set a Parameter Change Fault (code 49) if they are changed while the motor bridge is enabled (interlock = On). Although the parameter will be changed, the fault will prevent motor control functions until the fault is cleared by cycling the keyswitch. If the motor bridge is disabled (interlock = Off), changing these parameters will not cause a fault and the changes will take effect immediately.

Downloaded from www.Manualslib.com manuals search engine

Table 3 Programmable Parameter Menus: 1313/1314 Programmer

- **CONTROL MODE SELECT** ..... p. 29

- **0 - SPEED MODE EXPRESS** ..... p. 30
  - Max Speed
  - Kp
  - Ki
  - Accel Rate
  - Decel Rate
  - Brake Rate
  - Pump Enable
  - Regen Lower Enable

- **1 - SPEED MODE MENU**
  - **Speed Controller** ..... p. 31
    - Max Speed
    - Kp
    - Ki LS
    - Ki HS
    - Following Error Limit
    - Following Error Time
    - **Vel Feedforward** ..... p. 32
      - Kvff
      - Build Rate
      - Release Rate
    - **Acc Feedforward** ..... p. 32
      - Kaff
      - Kbff
      - Build Rate
      - Release Rate
  - **Response** ..... p. 33
    - Full Accel Rate HS
    - Full Accel Rate LS
    - Low Accel Rate
    - Neutral Decel Rate HS
    - Neutral Decel Rate LS
    - Full Brake Rate HS
    - Full Brake Rate LS
    - Low Brake Rate
    - **Fine Tuning** ..... p. 34
      - Partial Decel Rate
      - HS (High Speed)
      - LS (Low Speed)
      - Reversal Soften
      - Max Speed Accel
      - Max Speed Decel
  - **Restraint** ..... p. 35
    - Restraint Forward
    - Restraint Back
    - Soft Stop Speed
    - **Position Hold** ..... p. 35
      - Position Hold Enable
      - Position Hold Timeout
      - Kp
      - Kd
      - Set Speed Settling Time
      - Set Speed Threshold
      - Entry Rate
      - Exit Rollback Reduction
  - Pump Enable ..... p. 36
  - Regen Lower Enable ..... p. 36

- **2 - TORQUE MODE MENU**
  - **Speed Limiter** ..... p. 37
    - Max Speed
    - Kp
    - Ki
    - Kd
  - **Response** ..... p. 38
    - Accel Rate
    - Accel Release Rate
    - Brake Rate
    - Brake Release Rate
    - Neutral Braking
    - Neutral Taper Speed
    - Forward Full Restraint Speed
    - Back Full Restraint Speed
    - **Fine Tuning** ..... p. 39
      - Creep Torque
      - Brake Full Creep Cancel
      - Creep Build Rate
      - Creep Release Rate
      - Gear Soften
      - Brake Taper Speed
      - Reversal Soften
      - Max Speed Decel

- **CURRENT LIMITS MENU** ..... p. 41
  - Drive Current Limit
  - Regen Current Limit
  - Brake Current Limit
  - EMR Current Limit
  - Interlock Brake Current Limit
  - **Power Limiting Map** ..... p. 42
    - PL Nominal Speed
    - Delta Speed
    - **Drive Limiting Map** .... p. 42
      - Nominal
      - Plus Delta
      - Plus 2xDelta
      - Plus 4xDelta
      - Plus 8xDelta
    - **Regen Limiting Map** .. p. 43
      - Nominal
      - Plus Delta
      - Plus 2xDelta
      - Plus 4xDelta
      - Plus 8xDelta

- **THROTTLE MENU** ..... p. 44
  - Throttle Type
  - Forward Deadband
  - Forward Map
  - Forward Max
  - Forward Offset
  - Reverse Deadband
  - Reverse Map
  - Reverse Max
  - Reverse Offset
  - Throttle Filter
  - HPD SRO Type
  - Sequencing Delay
  - VCL Throttle Enable

- **BRAKE MENU** ..... p. 47
  - Brake Pedal Enable
  - Brake Type
  - Brake Deadband
  - Brake Map
  - Brake Max
  - Brake Offset
  - Brake Filter
  - VCL Brake Enable

Downloaded from www.Manualslib.com manuals search engine

Table 3 Programmable Parameter Menus: 1313/1314 Programmer, cont'd

- **EM BRAKE CONTROL MENU** ..... p. 48
  - Brake Type
  - Pull In Voltage
  - Holding Voltage
  - Battery Voltage Comp
  - Set EM Brake On Fault
  - Set Speed Threshold
  - Release Delay
  - Set Speed Settling Time
  - Torque Preload Delay
  - Torque Preload Enable
  - Torque Preload Cancel Delay
  - EM Brake Fault Motor Revs

- **DRIVERS MENU**
  - **Main Contactor** ..... p. 50
    - Main Enable
    - Main Interlock Type
    - Pull In Voltage
    - Holding Voltage
    - Battery Voltage Comp
    - Interlock Type
    - Open Delay
    - Weld Check Enable
    - Main DNC Check Enable
    - Main DNC Threshold
    - Precharge Enable
  - **Proportional Driver** ..... p. 52
    - PD Enable
    - Hyd Lower Enable
    - PD Max Current
    - PD Min Current
    - PD Dither %
    - PD Dither Period
    - PD Kp
    - PD Ki
  - **Driver 3** ..... p. 53
    - Contactor Enable
    - Pull In Voltage
    - Holding Voltage
  - **Fault Checking** ..... p. 54
    - Driver1 Checks Enable
    - Driver2 Checks Enable
    - Driver3 Checks Enable
    - Driver4 Checks Enable
    - PD Checks Enable
    - External Supply Max
    - External Supply Min
  - PWM Frequency ..... p. 54

- **MOTOR MENU** ..... p. 55
  - Typical Max Speed
  - **Control Algorithms** ..... p. 55
    - Motor Technology
    - **0-ACIM (Induction Motor)**
      - **Characterization Tests** p.56
        - Test Enable
        - Test Throttle
        - Motor Poles
        - Max Test Speed
        - Max Text Current
        - SlipGain
        - Current Reg ... Enable
      - **Field Weakening Control** .p.57
        - FW Base Speed
        - Field Weakening Drive
        - Weakening Rate Drive
        - Min Field Current
      - Swap Two Phases . p. 58
      - MotorType .....p. 58
      - **LOS** ..... p. 59
        - LOS Upon Encoder Fault
        - LOS Max Speed
        - LOS Max Current
        - LOS Max Mod Depth
        - LOS Accel Rate
        - LOS Decel Rate
    - **1-SPM (Surface PM Motor)**
      - **Characterization Tests** . p. 60
        - Test Enable
        - Test Throttle
        - Max Test Speed
        - Max Test Current
  - **Feedback Options** ..... p. 61
    - Feedback Type
    - Swap Feedback Direction
    - **1-Encoder**..... p. 61
      - Encoder Steps
      - **Encoder Fault Setup** ... p. 62
        - Fault Detection Enable
        - Encoder Pulse Fault Detect
        - Fault Stall Time
    - **2-Sin/Cos** ..... p. 62
      - Sin Cos Fault Threshold
      - Sin Min
      - Sin Max
      - Cos Min
      - Cos Max
  - **Temperature Control** ..... p. 63
    - Sensor Enable
    - Sensor Type
    - Sensor Offset
    - Braking Thermal Cutback Enable
    - Temperature Hot
    - Temperature Max
    - MotorTemp LOS Max Speed

- **BATTERY MENU** ..... p. 64
  - Nominal Voltage
  - Kp UV
  - Ki UV
  - User Overvoltage
  - User Undervoltage
  - Reset Volts Per Cell
  - Full Volts Per Cell
  - Empty Volts Per Cell
  - Discharge Time
  - BDI Reset Percent

- **DUAL DRIVE MENU** .... *see Dual Drive addendum, p/n 53134-DD.*

- **VEHICLE MENU** ..... p. 67
  - Metric Units
  - Speed to RPM
  - Capture Speed 1
  - Capture Speed 2
  - Capture Distance 1
  - Capture Distance 2
  - Capture Distance 3

- **EMERGENCY REVERSE MENU** ..... p. 68
  - EMR Enable
  - EMR Type
  - EMR Dir Interlock
  - EMR Time Limit
  - EMR Speed
  - EMR Accel Rate
  - EMR Decel Rate

- **INTERLOCK BRAKING MENU** ..... p. 69
  - Enable
  - Decel Rate HS
  - Decel Rate LS
  - Interlock Brake Timeout

Downloaded from www.Manualslib.com manuals search engine

Table 3 Programmable Parameter Menus: 1313/1314 Programmer, cont'd

CAN INTERFACE MENU ..... p. 70
- CANopen Interlock
- CAN Node ID 1
- CAN Node ID 2
- CAN Node ID 3
- CAN Node ID 4
- Supervisor Node ID
- Baud Rate
- Heartbeat Rate
- PDO Timeout Period
- Emergency Message Rate
- Suppress CANopen Init

RESET CONTROLLER ..... p. 71

Individual parameters are presented as follows in the menu charts:

Parameter name as it appears in the programmer display ⇓	Allowable range in the programmer's units ⇓	Description of the parameter's function and, where applicable, suggestions for setting it ⇓
Max Speed *Max_Speed_SpdM* `0x3011 0x00`	100–8000 rpm *100–8000*	Defines the maximum allowed motor rpm at full throttle.
⇑ *Parameter name in VCL*	⇑ *Allowable range in VCL units*	
⇑ `CAN object index and subindex`		

Note: All bit variables have two VCL parameter names. The first is the name of the bit, and the second is the name of the byte containing the bit. The bit position within the byte is indicated in brackets after the byte name.

Examples:

BIT NAME: *Metric_Units*
BYTE NAME: *OptionBits3* [Bit 5]

BIT NAME: *EMR_Dir_Interlock*
BYTE NAME: *EMR_Dir_Interlock_Bit0* [Bit 0]

In the second example, "*_Bit0*" is part of the byte name, and does not indicate the bit position; this byte, like all bytes, has 8 available bits.

Within the menu charts, each pair of bit variable names is shown as a grouped set, with the bit name appearing first and then the byte name:

Metric Units	On/Off
Metric_Units	*On/Off*
OptionBits3 [Bit 5]	

To retain parameter values changed via CANopen SDO write messages following a key-cycle, write a non-zero value to CAN_EE_Writes_Enabled (object index 0x332F, subindex 0x00) **before** changing parameter values. This will cause changes to be written to non-volatile memory immediately. **After** completing the changes, write the value zero to CAN_EE_Writes_Enabled.

CAUTION **Do not leave CAN_EE_Writes_Enabled at a non-zero value during normal operation, because damage to the controller's EEPROM may occur.**

If you have questions regarding the CAN features, contact your Curtis distributor or support engineer.

Downloaded from www.Manualslib.com manuals search engine

CONTROL MODE SELECT		
PARAMETER	ALLOWABLE RANGE	DESCRIPTION
Control Mode Select PCF *Control_Mode_Select* 0x3010 0x00	0–2 *0–2*	This parameter determines which control method will be in effect when programming motor response: 0 = SPEED MODE EXPRESS 1 = SPEED MODE 2 = TORQUE MODE. Contact your Curtis distributor or support engineer if you are interested in a custom control method. Note: Do not change this parameter while the controller is powering the motor. Any time this parameter is changed a Parameter Change Fault (fault code 49) is set and must be cleared by cycling power; this protects the controller and the operator.

Note: Motor Speed Constraints

The maximum motor speed is a programmable parameter in each control mode. Regardless of which control mode is used, the maximum motor speed the controller will allow is constrained by the number of motor poles, the encoder pulses per motor revolution, and the maximum speed constraint imposed by the firmware.

Electrical frequency constraint

The controller is designed to output fundamental electrical frequencies up to 450 Hz. It accomplishes this by clamping the Max Speed allowed, using the equation

Max Speed Frequency Limit = 54000 / Number of Motor Poles

Thus, for example, an 8-pole motor running synchronously at 450 Hz would rotate at 54000/8 = 6730 rpm. Therefore the internal control software will limit the max speed to 6750 rpm for an 8-pole motor. If the motor were to go over this speed going down a hill, the controller will still attempt to produce the correct frequency for maximized torque and proper control; it will not simply clamp to 450 Hz.

Encoder pulses/revolution constraint (quadrature encoder)

The maximum encoder frequency the controller will accept is 10 kHz. To determine how fast this constraint will allow your motor to spin, use the equation

Max Speed Encoder Limit = 600000 / Encoder Size

(e.g., a motor with a 128-pulse encoder can run up to 4687 rpm).

Firmware max speed constraint

The maximum motor speed the controller will allow is 8000 rpm.

Max Speed RPM Limit = 8000

☞ **The overall maximum motor speed allowed is the least of these three constraints.**

This maximum allowed speed is displayed in the Monitor » Motor » Max Speed Controller Limit variable.

Downloaded from www.Manualslib.com manuals search engine

0 – SPEED MODE EXPRESS **SPEED MODE EXPRESS MENU**

PARAMETER	ALLOWABLE RANGE	DESCRIPTION
Max Speed *Max_Speed_SpdMx* 0x3840 0x00	100–8000 rpm *100–8000*	Defines the maximum requested motor rpm at full throttle. Partially-applied throttle is scaled proportionately; e.g., 40% applied throttle corresponds to a request for 40% of the set Max Speed Value. Note: The maximum motor rpm is subject to the constraints on page 29.
Kp *Kp_SpdMx* 0x3841 0x00	0–100 % *0–8192*	Determines how aggressively the speed controller attempts to match the speed of the motor to the commanded speed. Larger values provide tighter control. If the gain is set too high, you may experience oscillations as the controller tries to control speed. If it is set too low, the motor may behave sluggishly and be difficult to control.
Ki *Ki_SpdMx* 0x3842 0x00	5–100 % *50–1000*	The integral term (Ki) forces zero steady state error, so the motor will run at exactly the commanded speed. Larger values provide tighter control. If the gain is set too high, you may experience oscillations as the controller tries to control speed. If it is set too low, the motor may take a long time to approach the exact commanded speed.
Accel Rate *Accel_Rate_SpdMx* 0x3843 0x00	0.1–30.0 s *100–30000*	Sets the rate (in seconds) at which the speed command increases when throttle is applied. Larger values represent slower response.
Decel Rate *Decel_Rate_SpdMx* 0x3847 0x00	0.1–30.0 s *100–30000*	Sets the rate (in seconds) that is used to slow down the vehicle when the throttle is reduced. Larger values represent slower response.
Brake Rate *Brake_Rate_SpdMx* 0x3848 0x00	0.1–30.0 s *100–30000*	Sets the rate (in seconds) at which the vehicle slows down when brake is applied or when throttle is applied in the opposite direction. Larger values represent slower response.
Pump Enable *AC_Pump_Enable_SpdM* *AC_Pump_Enable_SpdM_Bit0* [Bit 0] 0x3896 0x00	On/Off *On/Off*	This parameter should be programmed On to operate a pump motor rather than a vehicle drive motor. Speed controller responsiveness and stability are enhanced.
Regen Lower Enable *Regen_Lower_Enable_SpdM* *Regen_Lower_Enable_SpdM_Bit0* [Bit 0] 0x3877 0x00	On/Off *On/Off*	This parameter works together with Pump Enable as follows. When Pump Enable = On and Regen Lower Enable = On, the pump motor can turn in both the forward and the reverse direction. In this case, the pump can be used as the Lower function (reverse). When Pump Enable = On and Regen Lower Enable = Off, the pump motor can turn only in the forward direction. In this case, a hydraulic valve is typically used for the Lower function. When Pump Enable = Off, the Regen Lower Enable parameter has no effect on the control system.

Downloaded from www.Manualslib.com manuals search engine

1 – SPEED MODE **SPEED CONTROLLER MENU**

PARAMETER	ALLOWABLE RANGE	DESCRIPTION
Max Speed *Max_Speed_SpdM* 0x3011 0x00	100–8000 rpm *100–8000*	Defines the maximum requested motor rpm at full throttle. Partially-applied throttle is scaled proportionately; e.g., 40% applied throttle corresponds to a request for 40% of the set Max Speed Value. If Max_Speed_SpdM is set <100 rpm (through VCL or CAN), the throttle request is zeroed. Note: The maximum motor rpm is subject to the constraints on page 29.
Kp *Kp_SpdM* 0x3012 0x00	0–100 % *0–8192*	Determines how aggressively the speed controller attempts to match the speed of the motor to the commanded speed. Larger values provide tighter control. If the gain is set too high, you may experience oscillations as the controller tries to control speed. If it is set too low, the motor may behave sluggishly and be difficult to control.
Ki LS *Ki_SpdM* 0x3015 0x00	5–100 % *50–1000*	The Ki LS parameter sets the Ki for low vehicle speeds. The integral term (Ki) forces zero steady state error, so the motor will run at exactly the commanded speed. Larger values provide tighter control. If the gain is set too high, you may experience oscillations as the controller tries to control speed. If it is set too low, the motor may take a long time to approach the exact commanded speed.
Ki HS *Ki_HS_SpdM* 0x301D 0x00	5–100 % *50–1000*	The Ki HS parameter sets the integral term (Ki) for high vehicle speeds; see description of Ki LS.
Following Error Limit *Following_Error_Limit* 0x3035 0x00	0–6000 rpm *0–6000*	Defines the maximum difference that will be allowed between the commanded motor speed trajectory and the actual motor rpm. The real-time difference is displayed in Monitor » Motor Tuning » Following Error. If the Following Error Limit is exceeded for the Following Error Time, a Following Error Fault (fault code 48) is declared.
Following Error Time *Following_Error_Time* 0x38C0 0x00	500–5000 ms *250–2500*	Defines the maximum time the Following Error Limit can be exceeded before a Following Error Fault is declared. Following Error Time must be set long enough for the motor speed to decelerate and accelerate to maximum speed in the opposite direction during a direction reversal under the worst case conditions.

Downloaded from www.Manualslib.com manuals search engine

1 – SPEED MODE **VELOCITY FEEDFORWARD MENU** *[OPTIONAL]*

PARAMETER	ALLOWABLE RANGE	DESCRIPTION
Kvff *Kvff_SpdM* 0x3014 0x00	0–500 A *0–5000*	This velocity feedforward term is designed to improve throttle responsiveness and speed controller performance, especially at low speeds. For traction systems, set it to 50–70% of the current needed to maintain a very low speed, unloaded, on flat ground. For a pump system, set it to the lowest load current (i.e., the current running at the minimum load). Alternatively, the responsiveness of a pump speed control loop can be significantly enhanced by using a VCL program to continuously update this parameter to the appropriate value as each pump load is requested.
Build Rate *Vel_FF_Build_Rate_SpdM* 0x3093 0x00	0.1–5.0 s *100–5000*	Determines how fast the Kvff term builds up. For traction systems, if you feel or hear the mechanical slop pick up abruptly when you move the throttle from neutral to a very small value, slowing the build rate (i.e., setting it to a higher value) will soften the feel. For a pump system, start with this parameter at the minimum setting. Slowing it down (i.e., setting it to a higher value) will reduce speed overshoot if too much feedforward has been commanded.
Release Rate *Vel_FF_Release_Rate_SpdM* 0x3094 0x00	0.1–5.0 s *100–5000*	Determines how fast the Kvff term releases. If the release seems too abrupt, slowing the release rate (i.e., setting it to a higher value) will soften the feel. It should be set fast enough (i.e., at a low enough value) to prevent the vehicle from running on after throttle release.

1 – SPEED MODE **ACCELERATION FEEDFORWARD MENU** *[OPTIONAL]*

PARAMETER	ALLOWABLE RANGE	DESCRIPTION
Kaff *Kaff_SpdM* 0x3013 0x00	0–500 A *0–5000*	This acceleration feedforward term is designed to improve throttle responsiveness and speed controller performance at all speeds. It can be thought of as a “quick start” function which can enhance responsiveness at all speeds. Using your present accel and decel rates, observe the average current you are running at full throttle at low speeds while accelerating without load on flat ground, and set Kaff to 50–70% of that value. Note: If any accel rate parameters get changed, this parameter will need to be changed also.
Kbff *Kbff_SpdM* 0x3019 0x00	0–500 A *0–5000*	This braking feedforward term is designed to improve braking responsiveness at all speeds. Using your present decel rates, observe the average current you are running at full throttle braking, and set Kbff to that value.
Build Rate *Acc_FF_Build_Rate_SpdM* 0x3095 0x00	0.1–5.0 s *100–5000*	Determines how fast the Kaff and Kbff terms build up. For traction systems, if you feel or hear the mechanical slop pick up abruptly when you move the throttle from neutral to a very small value, slowing the build rate (i.e., setting it to a higher value) will soften the feel. For a pump system, start with this parameter at the minimum setting. Slowing it down (i.e., setting it to a higher value) will reduce speed overshoot if too much feedforward has been commanded.
Release Rate *Acc_FF_Release_Rate_SpdM* 0x3096 0x00	0.1–5.0 s *100–5000*	Determines how fast the Kaff and Kbff terms release. It should be set fast enough (i.e., at a low enough value) to prevent the vehicle from running on after throttle release.

Downloaded from www.Manualslib.com manuals search engine

1 – SPEED MODE **RESPONSE MENU**

PARAMETER	ALLOWABLE RANGE	DESCRIPTION
Full Accel Rate HS *Full_Accel_Rate_HS_SpdM* `0x307F 0x00`	0.1–30.0 s *100–30000*	Sets the rate (in seconds) at which the speed command increases when full throttle is applied at high vehicle speeds. Larger values represent slower response. See Figure 7 for relationship between Full Accel Rate HS, Full Accel Rate LS, and Low Accel Rate.
Full Accel Rate LS *Full_Accel_Rate_LS_SpdM* `0x3016 0x00`	0.1–30.0 s *100–30000*	Sets the rate (in seconds) at which the speed command increases when full throttle is applied at low vehicle speeds.
Low Accel Rate *Low_Accel_Rate_SpdM* `0x3081 0x00`	0.1–30.0 s *100–30000*	Sets the rate (in seconds) at which the speed command increases when a small amount of throttle is applied. This rate is typically adjusted to affect low speed maneuverability.
Neutral Decel Rate HS *Neutral_Decel_Rate_HS_SpdM* `0x3018 0x00`	0.1–30.0 s *100–30000*	Sets the rate (in seconds) that is used to slow down the vehicle when the throttle is released to neutral at high vehicle speeds.
Neutral Decel Rate LS *Neutral_Decel_Rate_LS_SpdM* `0x3070 0x00`	0.1–30.0 s *100–30000*	Sets the rate (in seconds) that is used to slow down the vehicle when the throttle is released to neutral at slow vehicle speeds.
Full Brake Rate HS *Full_Brake_Rate_HS_SpdM* `0x301B 0x00`	0.1–30.0 s *100–30000*	Sets the rate (in seconds) at which the vehicle slows down from high speeds when full brake is applied or when full throttle is applied in the opposite direction. See Figure 8 for relationship between Full Brake Rate HS, Full Brake Rate LS, and Low Brake Rate.
Full Brake Rate LS *Full_Brake_Rate_LS_SpdM* `0x3077 0x00`	0.1–30.0 s *100–30000*	Sets the rate (in seconds) at which the vehicle slows down from low speeds when full brake is applied or when full throttle is applied in the opposite direction.
Low Brake Rate *Low_Brake_Rate_SpdM* `0x301A 0x00`	0.1–30.0 s *100–30000*	Sets the rate (in seconds) at which the vehicle slows down at all speeds when a small amount of brake is applied or when a small amount of throttle is applied in the opposite direction.

Fig. 7 *Acceleration response rate diagram.*

In this example,
HS = 70%,
LS = 30%,
Typ Max Spd = 5000 rpm.

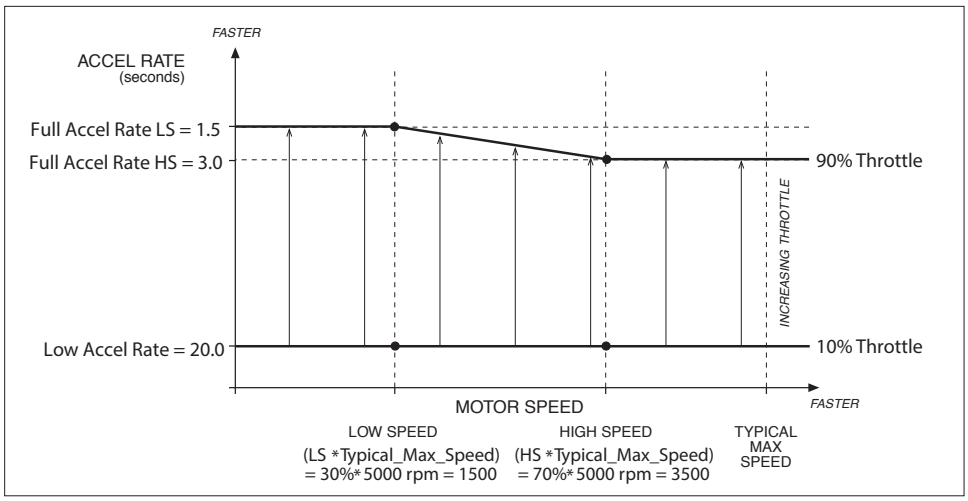

Downloaded from www.Manualslib.com manuals search engine

1 – SPEED MODE **FINE TUNING MENU**

PARAMETER	ALLOWABLE RANGE	DESCRIPTION
Partial Decel Rate *Partial_Decel_Rate_SpdM* 0x3082 0x00	0.1–30.0 s *100–30000*	Sets the rate (in seconds) that is used to slow down the vehicle when the throttle is reduced without being released to neutral. Larger values represent slower response.
HS (High Speed) *HS* 0x3076 0x00	0–100 % *0–32767*	Sets the percentage of the Typical Max Speed (page 55) above which the “HS” parameters will be used.
LS (Low Speed) *LS* 0x3075 0x00	0–100 % *0–32767*	Sets the percentage of the Typical Max Speed (page 55) below which the “LS” parameters will be used.
Reversal Soften *Reversal_Soften* 0x3074 0x00	0–100 % *0–3000*	Larger values create a softer reversal from regen braking to drive when near zero speed. This helps soften the transition when the regen and drive current limits are set to different values.
Max Speed Accel *Max_Speed_Accel_SpdM* 0x384A 0x00	0.1–30.0 s *100–30000*	In some applications, the Max Speed value is changed frequently, through VCL or over the CAN bus. The Max Speed Accel parameter controls the rate at which the maximum speed setpoint is allowed to change when the value of Max Speed is raised. The rate set by this parameter is the time to ramp from 0 rpm to Typical Max Speed rpm. For example, suppose Max Speed is raised from 1000 rpm to 4000 rpm. If Typical Max Speed is 5000 rpm and the rate is 10.0 seconds, it will take 10.0 * (4000–1000) / 5000 = 6.0 seconds to ramp from 1000 rpm to 4000 rpm.
Max Speed Decel *Max_Speed_Decel_SpdM* 0x3846 0x00	0.1–30.0 s *100–30000*	This parameter works like the Max Speed Accel parameter, except that it controls the rate at which the maximum speed setpoint is allowed to change when the value of Max Speed is lowered. For example, suppose you change Max Speed from 4500 rpm to 2500 rpm. If Typical Max Speed is 5000 rpm, and the rate is 5.0 seconds, it will take 5.0 * (4500–2500) / 5000 = 2.0 seconds to ramp from 4500 rpm to 2500 rpm.

Fig. 8 *Braking response rate diagram.*

In this example,
HS = 70%,
LS = 30%,
Typ Max Spd = 5000 rpm.

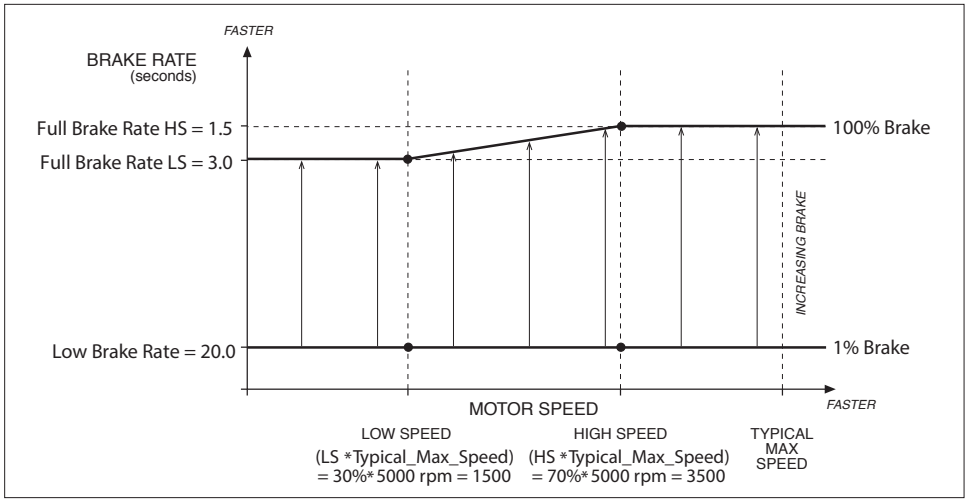

Downloaded from www.Manualslib.com manuals search engine

1 – SPEED MODE **RESTRAINT MENU**

PARAMETER	ALLOWABLE RANGE	DESCRIPTION
Restraint Forward *Restraint_Forward_SpdM* 0x3020 0x00	0–100 % *0–32767*	Increases torque when on a steep hill in order to limit roll-forward speed. Setting this parameter too high may cause oscillations in the motor as it attempts to limit the roll-forward speed.
Restraint Back *Restraint_Back_SpdM* 0x301F 0x00	0–100 % *0–32767*	Increases torque when on a steep hill in order to limit roll-back speed. Setting this parameter too high may cause oscillations in the motor as it attempts to limit the roll-back speed.
Soft Stop Speed *Soft_Stop_Speed* 0x3027 0x00	0–500 rpm *0–500*	Defines the speed below which a much slower decel rate is used. A setting of zero disables the function. Note: This parameter works only in Speed Mode and Speed Mode Express. Soft Stop Speed is useful for vehicles that have fast deceleration and vehicles operating on ramps using the Position Hold function. With vehicles that have fast deceleration, the driver may find the final speed reduction to zero rpm uncomfortable; the vehicle may even rock back as a result of tire wind-up. Soft Stop Speed allows the vehicle to slow at the same fast rate until it reaches the set threshold, at which point it changes to a slower (softer) deceleration rate. However, if the threshold is set too high, the vehicle will feel like it is “running on.” When throttle is released on a ramp, the vehicle may roll back before Position Hold (see below) takes control. Soft Speed Stop can be used to reduce the amount of rollback, but shouldn’t be set so high the vehicle drives up the ramp after the throttle is released.

1 – SPEED MODE **POSITION HOLD MENU**

PARAMETER	ALLOWABLE RANGE	DESCRIPTION
Position Hold Enable PCF *Position_Hold_Enable* *Position_Hold_Enable_Bit0* [Bit 0] 0x3893 0x00	On/Off *On/Off*	Allows the Position Hold mode to be entered at zero throttle when the vehicle comes to a stop. Note: EM Brake Type = 2 also enables the Position Hold function.
Position Hold Timeout *Position_Hold_Timeout_Time* 0x388C 0x00	0.0–20.0 s *0–625*	Sets the maximum time the vehicle will stay in Position Hold before releasing the hold and going into Restraint mode. Setting the parameter to zero disables this timeout function, which means the Position Hold will be held. Activating the interlock resets the timer.
Kp *Kp_Position_Hold* 0x388A 0x00	2–100 % *82–2048*	Determines the stiffness with which position is regulated when in Position Hold mode. High Kp will produce less rollback on a ramp, but more bouncing; see Kd below. Too much Kp will cause instability.
Kd *Kd_Position_Hold* 0x388D 0x00	0–100 % *0–8192*	Determines the damping in Position Hold mode. Some damping must be present in the control system to keep the vehicle from oscillating slowly (“bouncing”). High Kd will improve the dynamic response of the Position Hold controller, but too much Kd will cause fast instability.

Downloaded from www.Manualslib.com manuals search engine

1 – SPEED MODE **POSITION HOLD MENU, cont'd**

PARAMETER	ALLOWABLE RANGE	DESCRIPTION
Set Speed Settling Time *Set_Speed_Settling_Time* 0x3024 0x00	0–5000 ms *0–156*	This parameter appears twice in the menu structure. For description, see EM Brake Control menu, page 48.
Set Speed Threshold *Set_Speed_Threshold* 0x306F 0x00	5–100 rpm *5–100*	This parameter appears twice in the menu structure. For description, see EM Brake Control menu, page 48.
Entry Rate *Entry_Rate_Position_Hold* 0x383B 0x00	5–100 % *50–1000*	When the vehicle transitions from forward speed to reverse speed or from reverse speed to forward speed (for example, when coming to a stop going up a steep ramp), Position Hold is automatically entered immediately at zero speed—regardless of this parameter. This parameter applies when the vehicle needs to be brought to a stop without the assistance of gravity (for example, when moving forward down a ramp). This rate determines how quickly zero speed is attained after the ramped speed request reaches zero. Setting this parameter too high will make the stop seem very abrupt, and may even cause the vehicle to roll back slightly. When the parameter is set lower, the vehicle take longer to come to a stop and enter Position Hold mode.
Exit Rollback Reduction *Exit_Rollback_Reduction* 0x3844 0x00	0–100 % *0–2048*	This function is applicable only when the Torque Preload function has been disabled (see EM Brake Control menu), or its timer has expired. It introduces a proportional feedforward term into the speed controller based on the position signal. For example, suppose the vehicle is on a ramp and a forward throttle request is given such that the vehicle rolls back slightly before climbing the ramp (again, assuming the torque pre-load function is inactive). As the vehicle rolls back a feedforward torque term proportional to the rollback position will be added to the torque request until forward speed is sensed.

1 – SPEED MODE **PUMP PARAMETERS**

PARAMETER	ALLOWABLE RANGE	DESCRIPTION
Pump Enable *AC_Pump_Enable_SpdM* *AC_Pump_Enable_SpdM_Bit0* [Bit 0] 0x3896 0x00	On/Off *On/Off*	This parameter should be programmed On to operate a pump motor rather than a vehicle drive motor. Speed controller responsiveness and stability are enhanced.
Regen Lower Enable *Regen_Lower_Enable_SpdM* *Regen_Lower_Enable_SpdM_Bit0* [Bit 0] 0x3877 0x00	On/Off *On/Off*	This parameter works together with Pump Enable as follows. When Pump Enable = On and Regen Lower Enable = On, the pump motor can turn in both the forward and the reverse direction. In this case, the pump can be used as the Lower function (reverse). When Pump Enable = On and Regen Lower Enable = Off, the pump motor can turn only in the forward direction. In this case, a hydraulic valve is typically used for the Lower function. When Pump Enable = Off, the Regen Lower Enable parameter has no effect on the control system.

Downloaded from www.Manualslib.com manuals search engine

2 – TORQUE MODE **SPEED LIMITER MENU**

PARAMETER	ALLOWABLE RANGE	DESCRIPTION
Max Speed *Max_Speed_TrqM* 0x3021 0x00	500–8000 rpm *500–8000*	Defines the maximum allowed motor rpm for torque control mode (independent of throttle position). In torque control mode, full throttle requests 100% of the available torque. Partially-applied throttle is scaled proportionately; e.g., 40% applied throttle corresponds to a request for 40% of the available torque. Note: The maximum motor rpm is subject to the constraints on page 29.
Kp *Kp_TrqM* 0x3023 0x00	0–100 % *0–8192*	Determines how aggressively the speed controller attempts to limit the speed of the motor to Max Speed. Larger values provide tighter control. If Kp is set too high, you may experience oscillations as the controller tries to control speed. Setting Kp too low may result in a top speed much higher than Max Speed.
Ki *Ki_TrqM* 0x3025 0x00	5–100 % *50–1000*	The integral term (Ki) forces zero steady state error, so the motor speed will be limited to Max Speed. Larger values provide faster control. If the gain is set too high, you may experience oscillations as the controller tries to limit speed. If it is set too low, it may take a long time for the motor to approach Max Speed from overspeed.
Kd *Kd_TrqM* 0x3836 0x00	0–100 % *0–8192*	Provides damping as the vehicle approaches top speed, thereby reducing overshoot. If Kd is set too high, the vehicle may take too long to reach top speed. If Kd is set too low, the vehicle may overshoot top speed, especially when traveling downhill.

Downloaded from www.Manualslib.com manuals search engine

2 – TORQUE MODE **RESPONSE MENU**

PARAMETER	ALLOWABLE RANGE	DESCRIPTION
Accel Rate *Accel_Rate_TrqM* 0x3026 0x00	0.1–30.0 s *100–30000*	Sets the rate (in seconds) at which the motor torque increases to full when full throttle is applied. Larger values represent slower response.
Accel Release Rate *Accel_Release_Rate_TrqM* 0x3028 0x00	0.1–2.0 s *100–2000*	Determines how quickly deceleration will be initiated when the throttle is released while the vehicle is still accelerating. If the release rate is fast (i.e., set to a low value), the transition is initiated abruptly. The transition is smoother if the release rate is set to a higher value (slower transition); however, setting the rate too high can cause the vehicle to feel uncontrollable when the throttle is released, as it will continue to drive for a short time.
Brake Rate *Brake_Rate_TrqM* 0x3029 0x00	0.1–5.0 s *100–5000*	Adjusts the rate (in seconds) at which braking torque builds as the vehicle transitions from drive to braking when direction is reversed, the brake pedal is applied, or neutral braking begins. Lower values represent faster times and therefore faster braking; gentler braking is achieved by setting the braking rate to a higher value.
Brake Release Rate *Brake_Release_Rate_TrqM* 0x3831 0x00	0.1–2.0 s *100–2000*	Adjusts the rate (in seconds) at which braking torque releases as as the vehicle transitions from braking to drive.
Neutral Braking *Neutral_Braking_TrqM* 0x302E 0x00	0–100 % *0–32767*	Neutral braking occurs progressively when the throttle is reduced toward the neutral position or when no direction is selected. The neutral braking parameter is adjustable from 0 to 100% of the regen current limit (see Current Limits menu, page 41).
Neutral Taper Speed *Neutral_Taper_Speed_TrqM* 0x302F 0x00	200–6000 rpm *200–6000*	Determines the motor speed below which neutral braking current is adjusted when throttle is reduced; see Figure 9. The neutral braking current is linearly reduced from Neutral Braking * Regen Current Limit at the Neutral Taper Speed to the Creep Torque current at zero rpm motor speed. Note: Setting the taper speed too low may cause oscillations in the motor.
Forward Full Restraint Speed *Forward_Full_Restraint_Speed_TrqM* 0x386D 0x00	100–32000 rpm *100–32000*	Sets the speed point at which the full regen current will be applied to restrain the vehicle from rolling forward. Although this speed is never actually reached, it does set the slope of the restraint strength and can be thought of as a gain; see Figure 9. Setting this parameter too low can cause oscillations.
Back Full Restraint Speed *Back_Full_Restraint_Speed_TrqM_TrqM* 0x386E 0x00	100–32000 rpm *100–32000*	Sets the speed point at which the full regen current will be applied to restrain the vehicle from rolling in reverse (backward). Although this speed is never actually reached, it does set the slope of the restraint strength and can be thought of as a gain; see Figure 9. Setting this parameter too low can cause oscillations.

Downloaded from www.Manualslib.com manuals search engine

2 – TORQUE MODE **FINE TUNING MENU**

PARAMETER	ALLOWABLE RANGE	DESCRIPTION
Creep Torque *Creep_Torque_TrqM* `0x3071 0x00`	0–100 % *0–32767*	Determines the amount of torque applied to the vehicle at a stop with no throttle input, to emulate the feel of an automatic transmission automobile; see Figure 9. ***WARNING!*** When interlock is engaged, creep torque allows vehicle propulsion if a direction is selected even though no throttle is applied. Care should be taken when setting up this parameter. If pedal braking is enabled (see page 47), creep torque is progressively disabled as brake is applied so as to prevent the motor from driving into the brakes and thus wasting energy. Creep Torque and Neutral Taper Speed interact to create the slope of the torque response as the vehicle approaches zero speed; see Figure 9. If the vehicle oscillates as it coasts down toward zero speed, try lowering Creep Torque or increasing Neutral Taper Speed.
Brake Full Creep Cancel *Brake_Full_Creep_Cancel_TrqM* `0x3837 0x00`	25–100 % *8192–32767*	Determines the amount of brake pedal input that will fully cancel the . creep torque. Amount of cancellation is proportional to the brake input.
Creep Build Rate *Creep_Build_Rate_TrqM* `0x3832 0x00`	0.1–5.0 s *100–5000*	Determines how fast the programmed creep torque builds when a direction is selected.
Creep Release Rate *Creep_Release_Rate_TrqM* `0x3833 0x00`	0.1–5.0 s *100–5000*	Determines how fast the programmed creep torque releases when the brake is cancelling the creep torque or when the direction switches are cleared (neutral).
Gear Soften *Gear_Soften_TrqM* `0x302A 0x00`	0–100 % *0–5000*	Adjusts the throttle take-up from linear (0% setting) to an S curve. Larger values create softer throttle take-up, in forward and reverse. Softening is progressively reduced at higher speeds; see Figure 10.
Brake Taper Speed *Brake_Taper_Speed_TrqM* `0x300F 0x00`	200–6000 rpm *200–6000*	Determines the motor speed below which the maximum braking current is linearly reduced from 100% to 0% at zero speed; see Figure 11. Setting the taper speed too low for the braking current will cause oscillations in the motor as it attempts to brake the vehicle to a stop on very steep slopes. Taper speed is applicable only in response to brake pedal input; it does not affect direction reversal braking or neutral braking. If the vehicle is in restraint when the brake is pressed, the applied braking torque is affected by both Brake Taper Speed and Forward (or Back) Full Restraint Speed. If the vehicle oscillates in this mode, it may be necessary to increase one or more of these parameters.
Reversal Soften *Reversal_Soften* `0x3074 0x00`	0–100 % *0–3000*	Larger values create a softer reversal from regen braking to drive when near zero speed. This helps soften the transition when the regen and drive current limits are set to different values.

Downloaded from www.Manualslib.com manuals search engine

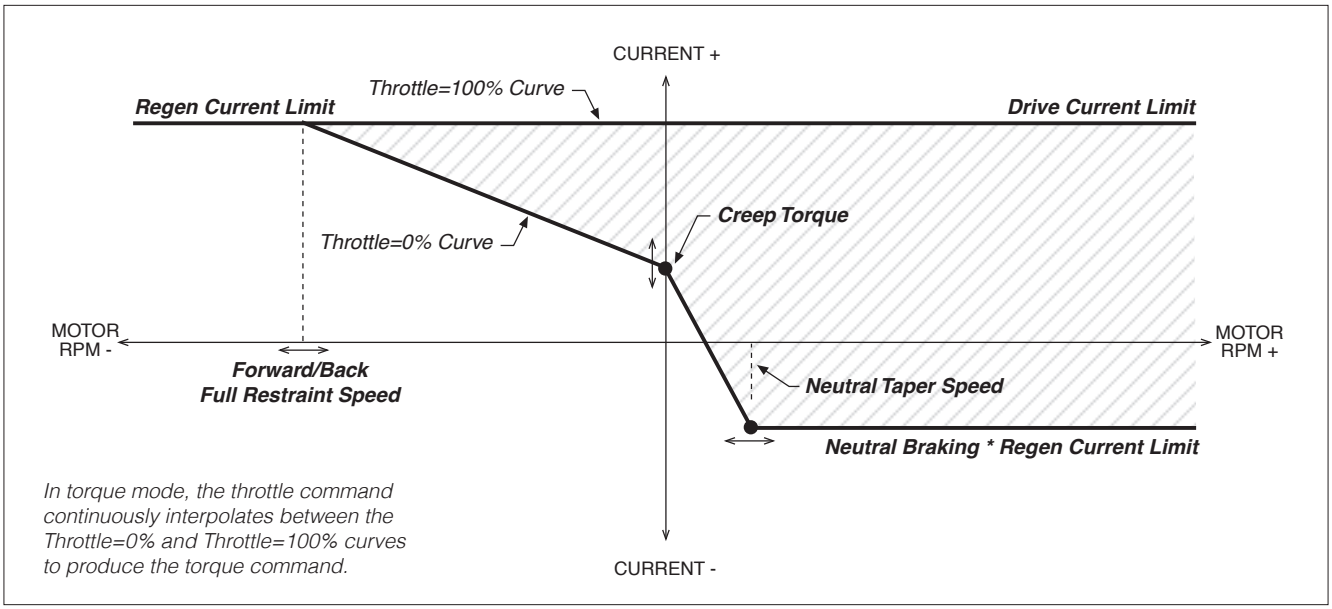

Fig. 9 *Throttle mapping (torque control mode).*

Fig. 10 *Effect of Gear Soften parameter (torque control mode).*

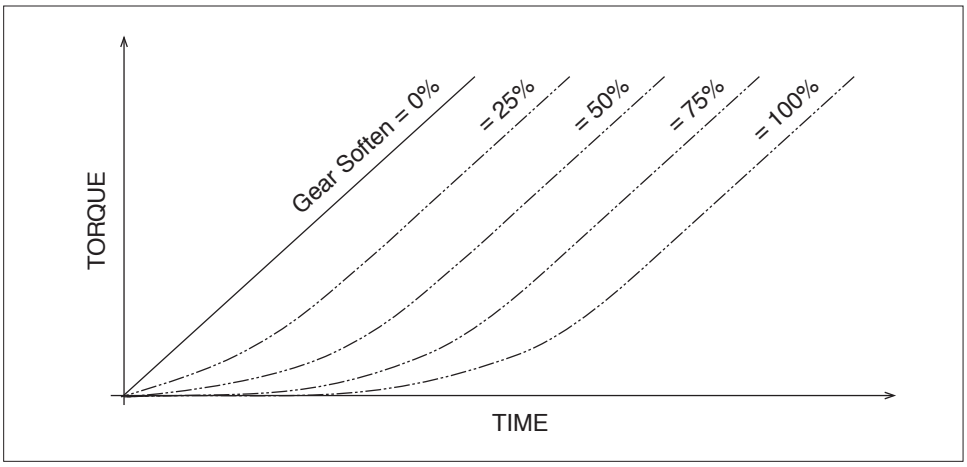

Fig. 11 *Effect of Brake Taper Speed parameter (torque control mode).*

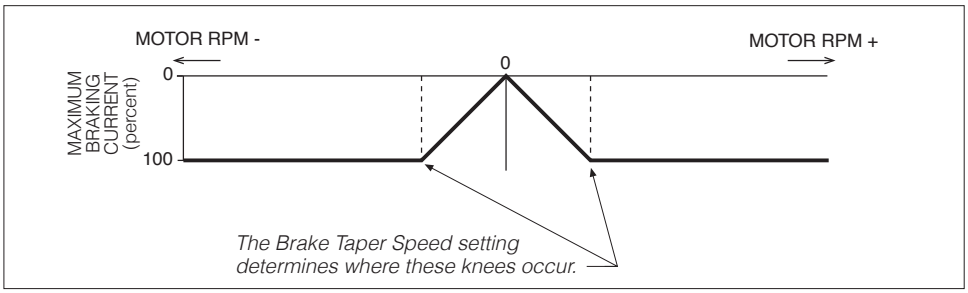

Downloaded from www.Manualslib.com manuals search engine

2 – TORQUE MODE **FINE TUNING MENU, cont'd**

PARAMETER	ALLOWABLE RANGE	DESCRIPTION
Max Speed Decel *Max_Speed_Decel_TrqM* 0x3835 0x00	0.1–30.0 s *100–30000*	In some applications, the Max Speed value is changed frequently, through VCL or over the CAN bus. The Max Speed Accel parameter controls the rate at which the maximum speed setpoint is allowed to change when the value of Max Speed is lowered. The rate set by this parameter is the time to ramp from Typical Max Speed rpm to 0 rpm. For example, suppose you change Max Speed from 3000 rpm to 1000 rpm. If Typical Max Speed is 5000 rpm, and the rate is 5.0 seconds, it will take 5.0 * (3000–1000) / 5000 = 2.0 seconds to ramp from 3000 rpm to 1000 rpm.

CURRENT LIMITS MENU

PARAMETER	ALLOWABLE RANGE	DESCRIPTION
Drive Current Limit *Drive_Current_Limit* 0x305B 0x00	5–100 % *1638–32767*	Sets the maximum RMS current the controller will supply to the motor during drive operation, as a percentage of the controller's full rated current.* Reducing this value will reduce the maximum drive torque.
Regen Current Limit *Regen_Current_Limit* 0x305C 0x00	5–100 % *1638–32767*	Sets the maximum RMS regen current, as a percentage of the controller's full rated current.* The regen current limit applies during neutral braking, direction reversal braking, and speed limiting when traveling downhill.
Brake Current Limit *Brake_Current_Limit* 0x305D 0x00	5–100 % *1638–32767*	Sets the maximum RMS regen current during braking when a brake command is given, as a percentage of the controller's full rated current.* Typically the brake current limit is set equal to the regen current limit. The brake current limit overrides the regen current limit when the brake input is active.
EMR Current Limit *EMR_Current_Limit* 0x3037 0x00	5–100 % *1638–32767*	Sets the maximum RMS current allowed for braking and drive when in emergency reverse. The emergency reverse current limit is a percentage of the controller's full rated current.*
Interlock Brake Current Limit *Interlock_Brake_Current_Limit* 0x309D 0x00	5–100 % *1638–32767*	Sets the maximum RMS regen current during interlock braking, as a percentage of the controller's full rated current.*

* The full rated current depends on the controller model; see specifications in Table D-1 for the rated current of your model.

Downloaded from www.Manualslib.com manuals search engine

POWER LIMITING MAP MENU

PARAMETER	ALLOWABLE RANGE	DESCRIPTION
PL Nominal Speed *PL_Nominal_Speed* 0x305E 0x00	100–4000 rpm *100–4000*	Sets the base speed that will be used in the drive limiting map and regen limiting map.
Delta Speed *PL_Delta_Speed* 0x305F 0x00	50–1000 rpm *50–1000*	Sets the width of the delta increment that will be used in the drive limiting map and regen limiting map.

DRIVE LIMITING MAP MENU

PARAMETER	ALLOWABLE RANGE	DESCRIPTION
Nominal *PL_Drive_Nominal* 0x3060 0x00	0–100 % *0–32767*	These parameters define the percentage of drive current limit that will be applied at the speeds defined by the nominal speed and delta speed parameters. The resulting map allows the controller to reduce the drive current as a function of speed. Reducing the power requirements at certain speeds restricts performance. This can be useful for reducing motor heating. It can also be used to keep consistent vehicle power with changing battery state-of-charge.
Plus Delta *PL_Drive_Nominal_Plus_Delta* 0x3061 0x00	0–100 % *0–32767*	
Plus 2xDelta *PL_Drive_Nominal_Plus_2xDelta* 0x3062 0x00	0–100 % *0–32767*	
Plus 4xDelta *PL_Drive_Nominal_Plus_4xDelta* 0x3063 0x00	0–100 % *0–32767*	
Plus 8xDelta *PL_Drive_Nominal_Plus_8xDelta* 0x3064 0x00	0–100 % *0–32767*	

Fig. 12 *Drive current limiting map (typical example).*

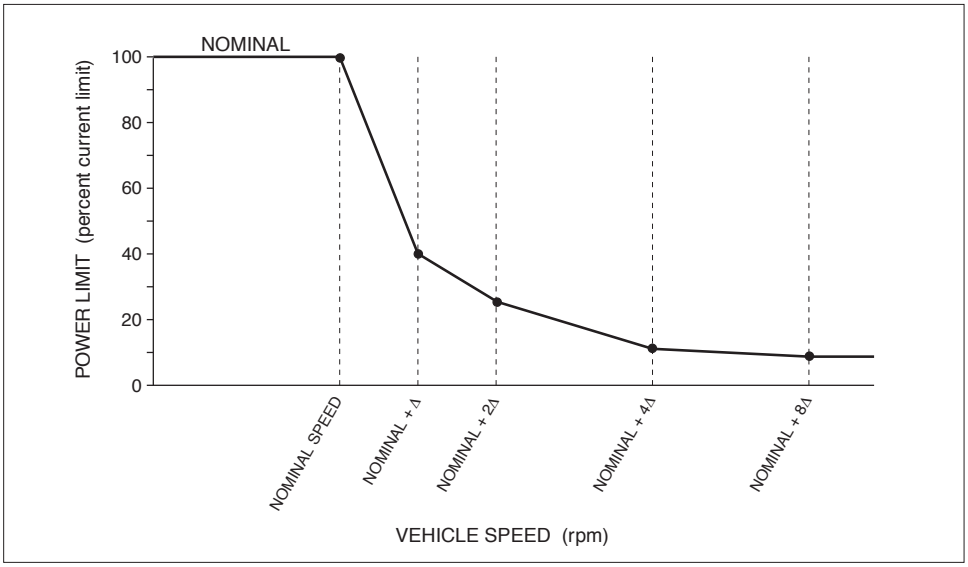

Downloaded from www.Manualslib.com manuals search engine

REGEN LIMITING MAP MENU

PARAMETER	ALLOWABLE RANGE	DESCRIPTION
Nominal *PL_Regen_Nominal* 0x3065 0x00	0–100 % *0–32767*	These parameters define the percentage of regen current limit or braking current limit that will be applied at the speeds defined by the nominal speed and delta speed parameters. The curve can be shaped to limit the available torque at various speeds. One possible use is to compensate for the torque-speed characteristic of the motor.
Plus Delta *PL_Regen_Nominal_Plus_Delta* 0x3066 0x00	0–100 % *0–32767*	
Plus 2xDelta *PL_Regen_Nominal_Plus_2xDelta* 0x3067 0x00	0–100 % *0–32767*	
Plus 4xDelta *PL_Regen_Nominal_Plus_4xDelta* 0x3068 0x00	0–100 % *0–32767*	
Plus 8xDelta *PL_Regen_Nominal_Plus_8xDelta* 0x3069 0x00	0–100 % *0–32767*	

Fig. 13 *Regen current limiting map (two examples).*

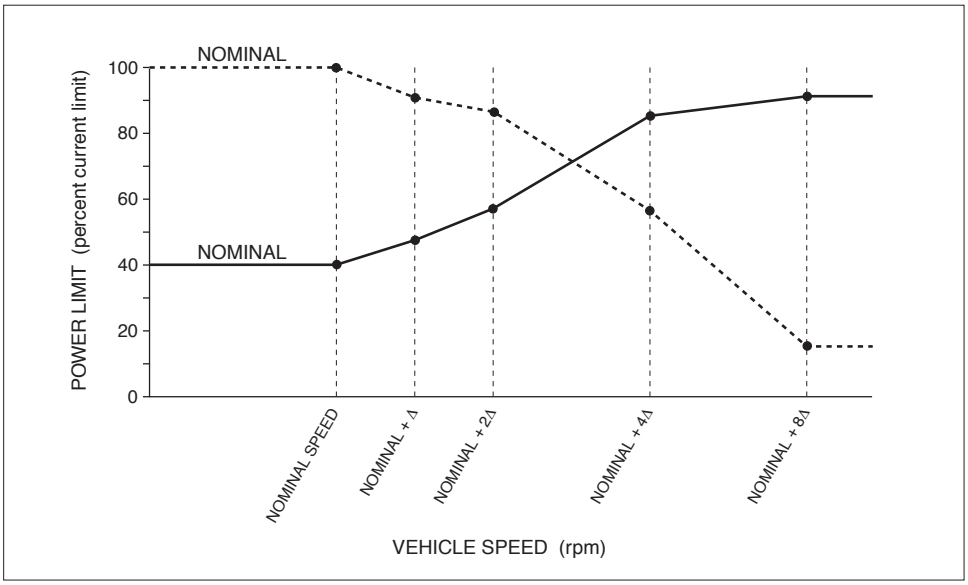

Downloaded from www.Manualslib.com manuals search engine

THROTTLE MENU		
PARAMETER	ALLOWABLE RANGE	DESCRIPTION
Throttle Type PCF *Throttle_Type* 0x3000 0x00	1–5 *1–5*	These E and SE controllers accept a variety of throttle inputs. The throttle type parameter can be programmed as follows: 1 2-wire rheostat, 5kΩ–0 input 2 single-ended 3-wire 1kΩ–10kΩ potentiometer, or 0–5V voltage source 3 2-wire rheostat, 0–5kΩ input 4 wigwag 3-wire 1kΩ–10kΩ potentiometer, or 0–5V voltage source 5 VCL input (*VCL_Throttle*) Note: Do not change this parameter while the controller is powering the motor. Any time this parameter is changed a Parameter Change Fault (fault code 49) is set and must be cleared by cycling power; this protects the controller and the operator.
Forward Deadband *Forward_Deadband* 0x3001 0x00	0.00–5.00 V *0–32767*	Defines the wiper voltage at the throttle deadband threshold. Increasing the throttle deadband setting will increase the neutral range. This parameter is especially useful with throttle assemblies that do not reliably return to a well-defined neutral point, because it allows the deadband to be defined wide enough to ensure that the controller goes into neutral when the throttle mechanism is released.
Forward Map *Forward_Map* 0x3002 0x00	0–100 % *0–32767*	Modifies the vehicle's response to the throttle input. Setting the throttle map at 50% provides a linear output response to throttle position. Values below 50% reduce the controller output at low throttle settings, providing enhanced slow speed maneuverability. Values above 50% give the vehicle a faster, more responsive feel at low throttle settings. The map value is the percentage of controller output at half throttle ((deadband + max)/2).
Forward Max *Forward_Max* 0x3003 0x00	0.00–5.00 V *0–32767*	Defines the wiper voltage required to produce 100% controller output. Decreasing the throttle max setting reduces the wiper voltage and therefore the full stroke necessary to produce full controller output. This parameter allows reduced-range throttle assemblies to be accommodated.
Forward Offset *Forward_Offset* 0x3004 0x00	0–100 % *0–32767*	Defines the initial controller output generated when the throttle is first rotated out of the neutral deadband. For most vehicles, a setting of 0 is appropriate. For heavy vehicles, however, increasing the offset may improve controllability by reducing the amount of throttle required to start the vehicle moving.

☞ Note: All four throttle adjustment parameters — Deadband, Map, Max, Offset — condition the raw throttle voltage into a single % throttle command, as shown in Figure 14.

Downloaded from www.Manualslib.com manuals search engine

THROTTLE MENU, cont'd		
PARAMETER	ALLOWABLE RANGE	DESCRIPTION
Reverse Deadband *Reverse_Deadband* 0x3005 0x00	0.00–5.00 V *0–32767*	The four Throttle Reverse parameters are the same as their Throttle Forward counterparts, and apply when the throttle direction is reversed.
Reverse Map *Reverse_Map* 0x3006 0x00	0–100 % *0–32767*	
Reverse Max *Reverse_Max* 0x3007 0x00	0.00–5.00 V *0–32767*	
Reverse Offset *Reverse_Offset* 0x3008 0x00	0–100 % *0–32767*	
Throttle Filter *Throttle_Filter* 0x3030 0x00	0.5–125.0 Hz *131–32767*	Sets the low pass filter cutoff frequency for the throttle pot wiper input. Higher values will make the throttle more responsive to quick changes. Lower values will make the throttle less responsive to electrical noise.

Fig. 14 *Effect of throttle adjustment parameters. Together these four generic parameters determine the controller's response to throttle demand (in forward or reverse) and to brake demand.*

In the examples shown in this figure,

Deadband = 0.5V
Max = 4.5V
Offset = 0.

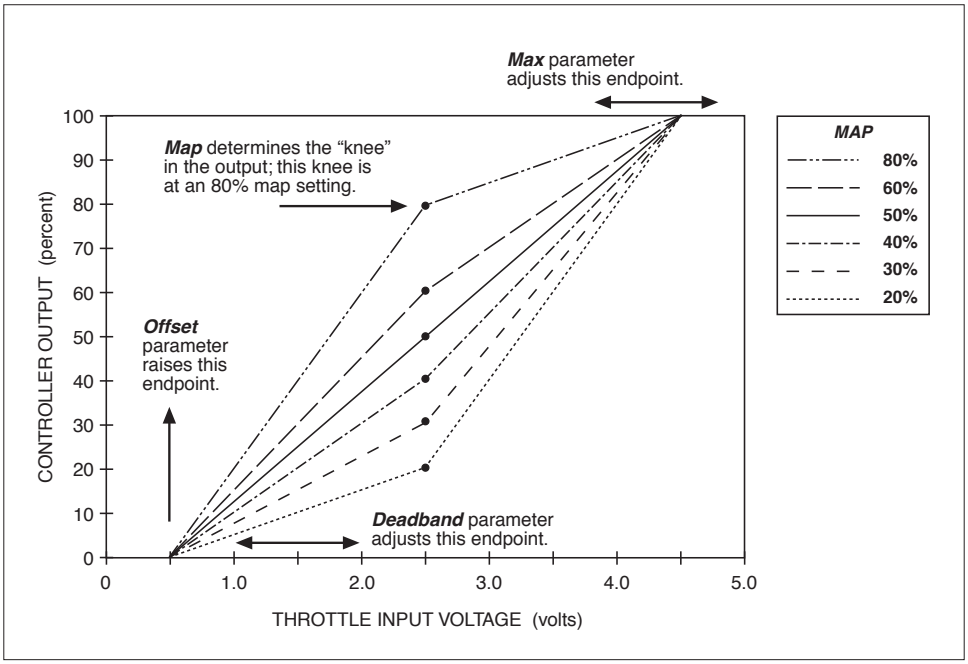

Downloaded from www.Manualslib.com manuals search engine

THROTTLE MENU, cont'd

PARAMETER	ALLOWABLE RANGE	DESCRIPTION
HPD SRO Type PCF *HPD_SRO_Type* 0x30CF 0x00	0–3 *0–3*	Determines the type of HPD (High Pedal Disable) / SRO (Static Return to Off) protection. One type of checks is available for material-handling vehicles, and two types for golf-style vehicles. If any of the HPD/SRO checks finds an input sequencing problem, an HPD/Sequencing Fault (flash code 47) is set. 0 HPD/SRO feature is disabled. 1 HPD/SRO enabled for material-handling vehicles. *HPD:* If throttle input is received before interlock input. *SRO:* If direction input is received before interlock input. The HPD/SRO check is made when the interlock input changes from Off to On. If the throttle input >25% or a direction input is On, an HPD/Sequencing Fault is set. The HPD/Sequencing Fault is cleared by returning the throttle input to <25% or the direction inputs to Off. 2 Golf-style HPD that allows direction reversal while driving. *HPD:* If throttle input is received before interlock or direction input while vehicle is stationary. *SRO:* None. The HPD check is made when the interlock input or direction inputs are Off and the vehicle is stationary. If the throttle input >25%, an HPD/Sequencing Fault is set. No SRO check is made with this type, so the order of the interlock and direction inputs does not matter. The HPD/Sequencing Fault is cleared by returning the throttle input to <25% or the direction inputs to Off. 3 Golf-style HPD that prevents direction reversal while driving. *HPD:* If throttle input is received before interlock or direction input. *SRO:* None. HPD check is made when the interlock input or direction inputs are Off. If the throttle input >25%, an HPD/Sequencing Fault is set. The check is done regardless of vehicle speed, so reversing direction with throttle input >25% will result in a fault. No SRO check is made with this type, so the order of the interlock and direction inputs does not matter The HPD/Sequencing Fault is cleared by returning the throttle input to <25% or the direction inputs to Off.
Sequencing Delay *Sequencing_Delay* 0x3009 0x00	0.0–5.0 s *0–1250*	Typically the sequencing delay feature allows the interlock switch to be cycled within a set time (the defined sequencing delay), thus preventing inadvertent activation of HPD/SRO. This feature is especially useful in applications where the interlock switch may bounce or be momentarily cycled during operation.
VCL Throttle Enable *VCL_Throttle_Enable* *VCL_Throttle_Enable_Bit0* [Bit 0] 0x3099 0x00	On/Off *On/Off*	When programmed On, the throttle processing with fault detection will operate normally; however, the throttle command (see Figure 15, page 114) will require VCL to define the connection between the OS_Throttle and VCL_Throttle variables. This allows VCL flexibility and customization of throttle processing, while still allowing Throttle_Type 1–4 with throttle fault detection.

Downloaded from www.Manualslib.com manuals search engine

BRAKE MENU		
PARAMETER	ALLOWABLE RANGE	DESCRIPTION
Brake Pedal Enable *Brake_Pedal_Enable* *OptionBits1* [Bit 3] `0x306A 0x00`	On/Off *On/Off*	Determines whether the brake input and algorithm are enabled, making the brake throttle part of the motor control command.
Brake Type PCF *Brake_Type* `0x300A 0x00`	1–5 *1–5*	These E and SE controllers accept a variety of brake inputs. The brake type parameter can be programmed as follows: 1 2-wire rheostat, 5kΩ–0 input 2 single-ended 3-wire 1kΩ–10kΩ potentiometer, 0–5V voltage source, or current source 3 2-wire rheostat, 0–5kΩ input 4 (not applicable) 5 VCL input (*VCL_Brake*) Note: Do not change this parameter while the controller is powering the motor. Any time this parameter is changed a Parameter Change Fault (fault code 49) is set and must be cleared by cycling power; this protects the controller and the operator.
Brake Deadband *Brake_Deadband* `0x300B 0x00`	0.00–5.00 V *0–32767*	The four Brake throttle adjustment parameters are the same as their Drive throttle counterparts; see descriptions and Figure 14.
Brake Map *Brake_Map* `0x300C 0x00`	0–100 % *0–32767*	
Brake Max *Brake_Max* `0x300D 0x00`	0.00–5.00 V *0–32767*	
Brake Offset *Brake_Offset* `0x300E 0x00`	0–100 % *0–32767*	
Brake Filter *Brake_Filter* `0x3031 0x00`	0.5–125.0 Hz *131–32767*	Sets the low pass filter cutoff frequency for the pot2 wiper input. Higher values will make the brake more responsive to quick changes. Lower values will make the brake less responsive to electrical noise.
VCL Brake Enable *VCL_Brake_Enable* *VCL_Brake_Enable_Bit0* [Bit 0] `0x301E 0x00`	On/Off *On/Off*	When programmed On, the brake processing with fault detection will operate normally; however, the brake command (see Figure 15, page 114) will require VCL to define the connection between the OS_Brake and VCL_Brake variables. This allows VCL flexibility and customization of throttle processing, while still allowing Brake_Type 1–3 with brake fault detection.

Downloaded from www.Manualslib.com manuals search engine

EM BRAKE CONTROL MENU

PARAMETER	ALLOWABLE RANGE	DESCRIPTION
Brake Type PCF *EM_Brake_Type* 0x3097 0x00	0–2 *0–2*	The brake type parameter determines how the EM brake responds to the interlock input, throttle, and vehicle motor speed. 0 EM brake function disabled. The EM brake driver (PWM2) is released to general I/O use with VCL. 1 EM brake controlled by interlock. The controller will command the EM brake to release whenever the interlock is closed (Interlock = On). If interlock braking is enabled and the interlock opens when the vehicle is moving at motor speed greater than Set_Speed_Threshold, the controller will brake the vehicle to a stop (with interlock braking) and then command the EM brake to set. If the vehicle motor speed is less than this threshold, the EM brake will engage after the Sequencing_Delay has expired. If interlock braking is disabled, the EM brake will engage after the Sequencing_Delay has expired. 2 EM brake controlled by interlock and neutral. The controller will command the EM brake to set whenever the throttle command is zero and motor speed is less than Set_Speed_Threshold. Position Hold will be enabled automatically.
Pull In Voltage *EM_Brake_Pull_In_Voltage* 0x3072 0x00	0–100 % *0–32767*	The EM brake pull-in voltage allows a high initial voltage when the EM brake first turns on, to ensure brake release. After 1 second, this peak voltage drops to the EM brake holding voltage. Note: The Battery Voltage Compensated parameter controls whether the pull-in and holding voltages are battery voltage compensated.
Holding Voltage *EM_Brake_Holding_Voltage* 0x3098 0x00	0–100 % *0–32767*	The EM brake holding voltage allows a reduced average voltage to be applied to the brake coil once the brake has been released. This parameter must be set high enough to hold the brake released under all shock and vibration conditions the vehicle will be subjected to. Note: The Battery Voltage Compensated parameter controls whether the pull-in and holding voltages are battery voltage compensated.
Battery Voltage Compensated *EM_Brake_Battery_Voltage_Compensated* *EM_Brake_Battery_Voltage_Compensated_Bit0* [Bit 0] 0x302D 0x00	On/Off *On/Off*	This parameter determines whether the EM brake pull-in and holding voltages are battery voltage compensated. When set On, the pull-in and holding voltages are compensated relative to the set Nominal Voltage (see Battery Menu, page 64). In other words, the output voltage is adjusted to compensate for swings in battery voltage, so the percentage is relative to the set Nominal Voltage—not to the actual voltage. For example, suppose Nominal Voltage is set to 48V and Holding Voltage is set to 75% (36V) to the output driver. Now suppose the bus voltage dips to 40V. If Battery Voltage Compensated = On, the output will still be 36V (Nominal Voltage × Holding Voltage) to the coil. If Battery Voltage Compensated = Off, the output will be 30V (Actual Voltage × Holding Voltage) to the coil.
Set EM Brake On Fault *EM_Brake_Set_Upon_Fault* *EM_Brake_Set_Upon_Fault_Bit0* [Bit 0] 0x309B 0x00	On/Off *On/Off*	When programmed On, the controller's operating system will drop the electromagnetic brake when a fault occurs that has a fault action of ShutdownEMBrake. See Section 9 for a list of all the faults that have a fault action of ShutdownEMBrake.

Downloaded from www.Manualslib.com manuals search engine

EM BRAKE CONTROL MENU, cont'd		
PARAMETER	ALLOWABLE RANGE	DESCRIPTION
Set Speed Threshold *Set_Speed_Threshold* 0x306F 0x00	5–100 rpm *5–100*	Determines the speed below which the EM brake will be commanded to set. Setting this speed too high may cause a jerky stop when the EM brake sets and stops the motor.
Release Delay *EM_Brake_Release_Delay* 0x3073 0x00	40–2000 ms *5–250*	Estimated time for the EM brake to physically release after the pull-in voltage is applied. This is used to ensure the position hold torque buildup is complete before the brake releases. When set too low, the vehicle may experience rollback on EM brake release.
Set Speed Settling Time *Set_Speed_Settling_Time* 0x3024 0x00	0–5000 ms *0–156*	Determines how long the position hold function is allowed to operate before the EM brake is set. This time should be set long enough for the position hold to settle. *Note* *
Torque Preload Delay *EM_Brake_Torque_Preload_Delay* 0x3090 0x00	0–800 ms *0–100*	Estimated worst-case time to build up the torque required to hold the vehicle stationary on a hill prior to EM brake release. This is used in conjunction with Release Delay to determine when to release the brake and allow the speed request to slew away from zero. *Note* *
Torque Preload Enable *EM_Brake_Torque_Preload_Enable* *EM_Brake_Torque_Preload_Enable_Bit0* [Bit 0] 0x389D 0x00	On/Off *On/Off*	When enabled, this function eliminates rollback when the throttle is re-engaged on a ramp by forcing the vehicle to first enter position-hold before setting the EM brake, and then "remembering" the amount of torque that was necessary to hold it on the ramp. When throttle is re-engaged, this value is loaded in the motor before the EM brake is released. The torque value is cleared automatically when KSI power is cycled. Off = When a valid throttle input is received, the speed controller will start with no torque preload as soon as the Release Delay expires. This will allow some rollback when the EM brake releases. On = When a valid throttle input is received, the speed controller will start with a pre-set torque as measured by position-hold when the vehicle came to a stop. *Note* *
Torque Preload Cancel Delay *EM_Brake_Torque_Preload_Cancel_Delay* 0x3091 0x00	0–120 s *0–15000*	The timer starts after the EM brake is set. If the timer expires before the throttle is re-engaged, the torque preload memory will be cleared. Setting this parameter to zero disables the timer, i.e., the preload is never cancelled. The purpose of this delay is to prevent the vehicle from lunging forward if it is unloaded on a hill such that the torque measured by position-hold is no longer valid. *Note: This parameter is applicable only when Torque Preload Enable = On (see conditions above).*
EM Brake Fault Motor Revs *EM_Brake_Fault_Motor_Revs* 0x3894 0x00	1.0–20.0 *10–200*	Defines the allowable number of motor revolutions after the EM brake is set before an EM Brake Failed to Set fault is issued (fault code 92).

** This parameter is applicable only when Speed Mode or Speed Mode Express is selected **and** either Position Hold Enable = On or EM Brake Type = 2.*

Downloaded from www.Manualslib.com manuals search engine

DRIVERS: MAIN CONTACTOR MENU

PARAMETER	ALLOWABLE RANGE	DESCRIPTION
Main Enable *Main_Enable* *OptionBits1* [Bit 0] 0x306A 0x00	On/Off *On/Off*	When programmed On, the controller's native software controls the main contactor when the interlock is enabled; when programmed Off, the contactor is controlled by VCL. Note: With Main Enable programmed Off, the controller will not be able to open the main contactor in serious fault conditions and the system will therefore not meet EEC safety requirements.
Main Interlock Type *Main_Interlock_Type* 0x386F 0x00	0–1 *0–1*	When set to 0, the main contactor and interlock each work as determined by their respective parameters. When set to 1, the main contactor will pull in with KSI (like a Type 2 interlock) but the interlock enables/disables drive and engages interlock braking (like a Type 0 or Type 1 interlock).
Pull In Voltage *Main_Pull_In_Voltage* 0x303C 0x00	0–100 % *0–32767*	The main contactor pull-in voltage parameter allows a high initial voltage when the main contactor driver first turns on, to ensure contactor closure. After 1 second, this peak voltage drops to the contactor holding voltage. Note: The Battery Voltage Compensated parameter (below) controls whether the pull-in and holding voltages are battery voltage compensated.
Holding Voltage *Main_Holding_Voltage* 0x303D 0x00	0–100 % *0–32767*	The main contactor holding voltage parameter allows a reduced average voltage to be applied to the contactor coil once it has closed. This parameter must be set high enough to hold the contactor closed under all shock and vibration conditions the vehicle will be subjected to. Note: The Battery Voltage Compensated parameter (below) controls whether the pull-in and holding voltages are battery voltage compensated.
Battery Voltage Compensated *Main_Driver_Battery_Voltage_Compensated* *Main_Driver_Battery_Voltage_Compensated_Bit0* [Bit 0] 0x302C 0x00	On/Off *On/Off*	This parameter determines whether the main pull-in and holding voltages are battery voltage compensated. When set On, the pull-in and holding voltages are set relative to the set Nominal Voltage (see Battery Menu, page 64). In other words, the output voltage is adjusted to compensate for swings in battery voltage, so the percentage is relative to the set Nominal Voltage—not to the actual voltage. For example, suppose Nominal Voltage is set to 48V and Holding Voltage is set to 75% (36V) to the output driver. Now suppose the bus voltage dips to 40V. If Battery Voltage Compensated = On, the output will still be 36V (Nominal Voltage × Holding Voltage) to the coil. If Battery Voltage Compensated = Off, the output will be 30V (Actual Voltage × Holding Voltage) to the coil.
Interlock Type *Interlock_Type* 0x300E 0x00	0–2 *0–2*	Three interlock options are available: 0 = interlock turns on with switch 3. 1 = interlock controlled by VCL functions. 2 = interlock turns on with KSI.
Open Delay *Open_Delay* 0x303F 0x00	0.0–40.0 s *0–10000*	Applicable only when Interlock Type = 0 or 1. The delay can be set to allow the contactor to remain closed for a period of time (the delay) after the interlock switch is opened. The delay is useful for preventing unnecessary cycling of the contactor and for maintaining power to auxiliary functions that may be used for a short time after the interlock switch has opened.

Downloaded from www.Manualslib.com manuals search engine

DRIVERS: MAIN CONTACTOR MENU, cont'd

PARAMETER	ALLOWABLE RANGE	DESCRIPTION
Weld Check Enable *Weld_Check_Enable* *OptionBits1* [Bit 2] `0x306A 0x00`	On/Off *On/Off*	When programmed On, the controller performs a test to make sure the main contactor is open (not welded shut) before it is commanded to close. This test is not performed if this parameter is Off. The main contactor driver, however, is always protected from short circuits.
Main DNC Check Enable *Main_DNC_Check_Enable* *OptionBits4* [Bit 7] `0x306D 0x00`	On/Off *On/Off*	When programmed On, the controller performs a test immediately after the main contactor is commanded to close, to make sure the contactor has in fact closed. The test is not performed if this parameter is programmed Off. The main contactor driver, however, is always protected from short circuits.
Main DNC Runtime Threshold *Main_DNC_Runtime_Threshold* `0x3032 0x00`	0.0–200.0 V *0–12800*	Sets the threshold used for the ongoing check that ensures the main contactor remains closed while in operation. The Main DNC Runtime Threshold is the maximum voltage difference between the Keyswitch and Capacitor voltages. When the voltage difference is above this threshold, and the battery current is low, a Main Did Not Close fault will be set. Setting this parameter lower will increase the sensitivity of the fault detection. Setting this parameter too low may cause false fault trips due to normal voltage drops between the keyswitch and capacitor voltages. Setting this parameter = 0 V will disable the Main Did Not Close fault check.
Precharge Enable *Precharge_Enable* *OptionBits2* [Bit 6] `0x306B 0x00`	On/Off *On/Off*	Turns the precharge feature on and off. Precharge provides a limited current charge of the controller's internal capacitor bank before the main contactor is closed. This decreases the arcing that would otherwise occur when the contactor is closed with the capacitor bank discharged.

Downloaded from www.Manualslib.com manuals search engine

DRIVERS: PROPORTIONAL DRIVER MENU

PARAMETER	ALLOWABLE RANGE	DESCRIPTION
PD Enable PCF *PD_Enable* *OptionBits1* [Bit 6] 0x306A 0x00	On/Off *On/Off*	Determines how the PWM of the proportional driver is controlled. When programmed On, it is controlled by the controller's PD current control software. When programmed Off, it is controlled by the VCL function *Put_PWM* (PWM5, value); see Figure 17, page 119.
Hyd Lower Enable *Hyd_Lower_Enable* *OptionBits1* [Bit 7] 0x306A 0x00	On/Off *On/Off*	When programmed On, lowering is controlled by throttle position. When programmed Off, lowering is controlled by the VCL variable *VCL_PD_Throttle*; see Figure 17, page 119.
PD Max Current *PD_Max_Current* 0x3040 0x00	0.00–2.00 A *0–607*	* The Lower speed is determined by the aperture of the proportional valve. This parameter sets the maximum allowed current through the valve, which in turn defines its aperture.
PD Min Current *PD_Min_Current* 0x3041 0x00	0.00–2.00 A *0–607*	* Sets the minimum allowed current through the proportional valve. Most proportional valves need a non-zero closed current in order to start opening immediately when Lower is requested.
PD Dither % *PD_Dither_Percent* 0x3042 0x00	0–100 % *0–32767*	* Dither provides a constantly changing current in the coil to produce a rapid back-and-forth motion of the valve; this keeps the valve lubricated and allows low-friction, precise movement. The PD Dither % parameter specifies the amount of dither as a percentage of the PD max current, and is applied in a continuous cycle of add%-subtract%.
PD Dither Period *PD_Dither_Period* 0x3043 0x00	16–112 ms *1–7*	* Sets the period for proportional valve dither.
PD Kp *PD_Kp* 0x3044 0x00	1–100 % *82–8192*	* Sets the proportional gain of the current feedback controller. Higher gains force the control loop to respond quickly but may cause oscillations.
PD Ki *PD_Ki* 0x3045 0x00	1–100 % *327–32767*	* Sets the integral gain of the current feedback controller. Integral gain tries to force the error to zero. Higher gains force the control loop to respond quickly but may cause oscillations.

* These parameter descriptions assume the proportional driver is being used to drive a proportional valve, and that the PD current control software is active (PD_Enable = On).

Downloaded from www.Manualslib.com manuals search engine

DRIVERS: DRIVER 3 MENU		
PARAMETER	ALLOWABLE RANGE	DESCRIPTION
Contactor Enable *Hydraulic_Contactor_Enable* *OptionBits4* [Bit 1] `0x306D 0x00`	On/Off *On/Off*	When programmed On, VCL functions control Driver 3 as the hydraulic pump contactor. On: The VCL function Start_Pump() will close the pump contactor according to the defined pull-in and holding voltages. The VCL function Stop_Pump() will open the pump contactor. Off: Driver 3 will be available for general VCL usage. Start_Pump() and Stop_Pump() will not have any effect.
Pull In Voltage *Driver3_Pull_In_Voltage* `0x3864 0x00`	0–100 % *0–32767*	The pull-in voltage parameter allows a high initial voltage when the contactor driver first turns on, to ensure contactor closure. After 1 second, this peak voltage drops to the contactor holding voltage. Note: This voltage will be battery voltage compensated.
Holding Voltage *Driver3_Holding_Voltage* `0x3865 0x00`	0–100 % *0–32767*	The holding voltage parameter allows a reduced average voltage to be applied to the contactor coil once it has closed. This parameter must be set high enough to hold the contactor closed under all shock and vibration conditions the vehicle will be subjected to. Note: This voltage will be battery voltage compensated.

Downloaded from www.Manualslib.com manuals search engine

DRIVERS: FAULT CHECKING MENU

PARAMETER	ALLOWABLE RANGE	DESCRIPTION
Driver1 Checks Enable *Driver1_Checks_Enable* *OptionBits2* [Bit 1] 0x306B 0x00	On/Off *On/Off*	The five Checks Enable parameters are used to enable driver and coil fault detection at the five individual drivers (at Pins J1-6, J1-5, J1-4, J1-3, and J1-2). When a Checks parameter is enabled, the associated driver, driver wiring, and driver load are checked to verify that the driver correctly drives the load both high and low. The checks will occur regardless of the PWM output of the driver. The checks will detect both open and shorted conditions. When a fault is detected, the controller opens the driver and issues a fault code. If nothing is connected to a driver, its Checks Enable parameter should be set Off. Note: Short circuit protection is always active at these five drivers, regardless of how Checks Enable is set.
Driver2 Checks Enable *Driver2_Checks_Enable* *OptionBits2* [Bit 2] 0x306B 0x00	On/Off *On/Off*	
Driver3 Checks Enable *Driver3_Checks_Enable* *OptionBits2* [Bit 3] 0x306B 0x00	On/Off *On/Off*	
Driver4 Checks Enable *Driver4_Checks_Enable* *OptionBits2* [Bit 4] 0x306B 0x00	On/Off *On/Off*	
PD Checks Enable *PD_Checks_Enable* *OptionBits2* [Bit 5] 0x306B 0x00	On/Off *On/Off*	
External Supply Max *External_Supply_Max* 0x3046 0x00	0–200 mA *0–800*	Sets the upper threshold of the combined current of the 5V and 12V external supplies. At or above this threshold a fault will be created that can be read by VCL.
External Supply Min *External_Supply_Min* 0x3047 0x00	0–200 mA *0–800*	Sets the lower threshold of the combined current of the 5V and 12V external supplies. At or below this threshold a fault will be created that can be read by VCL.

DRIVERS: PWM FREQUENCY PARAMETER

PARAMETER	ALLOWABLE RANGE	DESCRIPTION
PWM Frequency *PWM_Frequency* 0x3938 0x00	100–1000 Hz *100–1000*	This single parameter defines the frequency of Drivers 1 through 4.

Downloaded from www.Manualslib.com manuals search engine

MOTOR MENU		
PARAMETER	ALLOWABLE RANGE	DESCRIPTION
Typical Max Speed *Typical_Max_Speed* `0x304D 0x00`	500–8000 rpm *500–8000*	Set this parameter to the typical maximum motor speed of the vehicle. This value does not need to be set precisely; an estimate will do. All of the vehicle response rates are normalized to Typical Max Speed. For example, suppose Typical_Max_Speed is fixed at 6000 rpm, and Full_Accel_Rate_LS_SpdM = 3.0 seconds: If Max_Speed_SpdM = 6000 rpm, it will take 3.0 seconds to accelerate from zero to top speed (6000 rpm). If Max_Speed_SpdM = 3000 rpm, it will take 1.5 seconds to accelerate from zero to top speed (3000 rpm). If Max_Speed_SpdM = 1000 rpm, it will take 0.5 seconds to accelerate to accelerate from zero to top speed (1000 rpm).

MOTOR: CONTROL ALGORITHMS MENU		
PARAMETER	ALLOWABLE RANGE	DESCRIPTION
Motor Technology *Motor_Technology* `0x3814 0x00`	0–1 *0–1*	Set this parameter to the type of motor in your vehicle: 0 = ACIM (Induction Motor) 1 = SPM (Surface PM Motor). Note: A Parameter Mismatch fault will result unless the Feedback Type (see page 61) matches the Motor Technology setting: If Motor Technology = 0 (ACIM), then Feedback Type must = 1 (quadrature encoder). If Motor Technology = 1 (SPM), then Feedback Type must = 2 (sin/cos sensor).

Downloaded from www.Manualslib.com manuals search engine

MOTOR: 0-ACIM: CHARACTERIZATION TESTS MENU		
PARAMETER	ALLOWABLE RANGE	DESCRIPTION
Test Enable *IM_AutoChar_Test_Enable* `0x3800 0x00`	0–1 *0–1*	This parameter is used to start the ACIM motor characterization procedure. See Section 6a for the complete description of the ACIM motor characterization procedure.
Test Throtte *Test_Throttle* `0x3034 0x00`	-1–1 *-1–1*	This parameter is used to change the direction of the motor to the forward direction during ACIM motor characterization. See Section 6a for the complete description of the ACIM motor characterization procedure and how this parameter is used.
Motor Poles *IM_MotorData6* `0x3805 0x00`	2–12 *1–6*	This parameter is used to select the number of poles before beginning the ACIM motor characterization procedure. See Section 6a for the complete description of the ACIM motor characterization procedure and how this parameter is used.
Max Test Speed *IM_AutoChar_Max_Test_Speed* `0x38A0 0x00`	500–8000 rpm *500–8000*	This parameter is used to set the maximum motor speed allowed during ACIM motor characterization. See Section 6a for the complete description of the ACIM motor characterization procedure and how this parameter is used.
Max Test Current *IM_AutoChar_Max_Test_Current* `0x38A1 0x00`	10–100 % *3277–32767*	This parameter is used to set the maximum motor current allowed during ACIM motor characterization. See Section 6a for the complete description of the ACIM motor characterization procedure and how this parameter is used.
SlipGain *IM_MotorData8* `0x3819 0x00`	0.00–200.00 *0–20000*	This parameter is adjusted during ACIM motor characterization to tune the motor to deliver the maximum torque per amp. See Section 6a for the complete description of the ACIM motor characterization procedure and how this parameter is used.
Current Reg Tuning Test Enable *IM_CR_Tuning_Test_Enable* `0x388B 0x00`	0–1 *0–1*	This parameter is used to perform only the current regulation tuning portion of the ACIM motor characterization procedure.

Downloaded from www.Manualslib.com manuals search engine

MOTOR: 0-ACIM: FIELD WEAKENING CONTROL MENU

PARAMETER	ALLOWABLE RANGE	DESCRIPTION
FW Base Speed *FW_Base_Speed* 0x3857 0x00	200–12000 rpm *200–12000*	Sets the speed at which modulation depth has reached 100% (all available voltage is used) and where field weakening begins. This parameter is scaled by an internal motor characterization parameter, so the setting of FW Base Speed should always be done using the tuning test, which will take into account the scaling factor. Entering a speed observed from a torque vs. speed plot should not be done, as this number fails to take into account the internal scaling factor. This parameter needs to be set during initial setup and reset each time the Motor Type or the low speed current limit is changed. For example, if you lower Drive_Current_Limit (page 41) or PL_Drive_Nominal (page 42), you should reset this parameter. To determine the correct value, perform this tuning test. The test should be run with batteries that have a reasonable charge. In either Torque Control Mode or Speed Control Mode, set your accel rates to be fast—so that you'll be accelerating at full current during the test. Next, set the Base Speed parameter to the maximum value (so that it will not interfere with the test result). From a stop, apply full throttle and accelerate to high speed and then stop. After stopping, note the value displayed in Monitor » Controller » Motor Tuning » Base Speed Captured, and enter this value for the Base Speed setting. The test restarts each time the vehicle comes to a stop and the throttle is released, so be sure to note the value before driving away.
Field Weakening Drive *Field_Weakening_Drive* 0x3033 0x00	0–100 % *0–1024*	Sets the amount of field weakening allowed while driving the motor. Field Weakening Drive will affect efficiency and torque only at speeds above the programmed FW Base Speed. Low settings will result in better efficiency but less torque; higher settings will result in more torque and less efficiency. A setting of zero will disable field weakening, thus resulting in the highest efficiency and lowest torque above base speed To keep motor and controller heating to a minimum (high efficiency), Field Weakening Drive should be set just high enough to meet the high speed performance specifications. (Typical high speed performance specifications are maximum drive speed with full load, or maximum lift speed with full load.) The drive current limiting map (see page 42) can also be used to restrict performance at all speeds. The maximum setting of the Field Weakening Drive parameter depends on the type of motor characterization that was used. *If the ACIM motor was dyno characterized* (i.e., sent to Curtis for characterization on the motor dyno), Field Weakening Drive can be set anywhere in the range of 0% (lowest torque, highest efficiency) to 100% (highest torque, lowest efficiency). *If the ACIM motor was auto characterized* (i.e., characterized using the ACIM motor characterization procedure in Section 6a), the range is restricted by the results of the Field Weakening Test. For these motors, Field Weakening Drive can be set anywhere in the range of 0% (lowest torque, highest efficiency) to Max Field Weakening Drive (highest torque, lowest efficiency). For auto characterized motors, setting Field Weakening Drive greater than the maximum setting found in the Field Weakening Test will result in poorer efficiency and less torque as the motor will be operating "over the slip curve." Note: The Field Weakening Drive setting will have no effect at motor speeds below FW Base Speed.

Downloaded from www.Manualslib.com manuals search engine

MOTOR: 0-ACIM: FIELD WEAKENING CONTROL MENU, cont'd		
PARAMETER	ALLOWABLE RANGE	DESCRIPTION
Weakening Rate Drive *Field_Weakening_Rate_Drive* 0x383C 0x00	0–100 % *0–500*	Sets the control loop gains for field weakening. Setting the rate too low may create surging in the vehicle as it accelerates at mid to high speeds. Setting the rate too high may create high frequency oscillations (usually audible) when the vehicle accelerates at mid to high speeds.
Min Field Current *Min_Field_Current* 0x3821 0x00	0–800 A *0–8000*	Sets the field current when no torque is requested from the motor. This current pre-fluxes the motor and can improve initial take-off at the expense of some battery consumption.

MOTOR: 0-ACIM: SWAP TWO PHASES AND MOTOR TYPE PARAMETERS		
PARAMETER	ALLOWABLE RANGE	DESCRIPTION
Swap Two Phases PCF *Swap_Two_Phases* *OptionBits3* [Bit 3] 0x306C 0x00	On/Off *On/Off*	If, after Swap Encoder Direction has been set correctly, the vehicle drives in the wrong direction (i.e., drives forward when in reverse, and vice versa), try changing the setting of the Swap Two Phases parameter. This parameter has the same effect as physically swapping the cables on any two of the three motor phase connections. **Positive motor speed must be in the forward direction in order for the emergency reverse feature to operate properly.** Note: Do not change this parameter while the controller is powering the motor. Any time this parameter is changed a Parameter Change Fault (fault code 49) is set and must be cleared by cycling power; this protects the controller and the operator. ***Adjusting this parameter can be hazardous. For instructions, see Section 5, Step ⑪ (page 91).***
Motor Type PCF *IM_Motor_Type* 0x3809 0x00	0–302 *0–302*	This parameter references a predefined table of motor parameters for many AC motors. Consult your Curtis distributor or support engineer for information on how to set this parameter based on your application and motor.

Downloaded from www.Manualslib.com manuals search engine

MOTOR: 0-ACIM: LOS MENU		
PARAMETER	ALLOWABLE RANGE	DESCRIPTION
LOS Upon Encoder Fault *LOS_Upon_Encoder_Fault* *LOS_Upon_Encoder_Fault_Bit0* [Bit 0] `0x308F 0x00`	On/Off *On/Off*	Limited Operating Strategy (LOS) is typically used to drive the vehicle back to a repair center at very low speeds in the event the motor encoder fails. Following an encoder failure ((either Encoder Fault (fault code 36) or Stall Detected (fault code 73)), and after the Interlock is cycled, the vehicle enters LOS mode thus allowing drive without motor encoder feedback. In LOS mode, the ability to achieve maximum torque—even for a very short time—is considered more important than smoothness. When LOS mode is entered, the Encoder LOS fault (fault code 93) becomes active and the encoder fault ((either Encoder Fault (fault code 36) or Stall Detected (fault code 73)) is cleared. When this parameter is programmed On, LOS mode will be entered in the event of an encoder fault followed by an Interlock cycle. When programmed Off, in the event of an encoder fault the encoder fault remains and drive is disabled.
LOS Max Speed *Enc_LOS_Max_Speed* `0x3083 0x00`	100–2000 rpm *100–2000*	This parameter indirectly defines the maximum speed for LOS mode by setting the maximum frequency that corresponds to LOS Max Speed. In LOS mode the throttle commands a frequency that is interpolated linearly between zero (at Throttle Command = 0%) and the programmed LOS Max Speed (at Throttle Command = 100%).
LOS Max Current *Enc_LOS_Max_Current* `0x3085 0x00`	100–650 A *1000–6500*	In LOS mode, a partial or full throttle command will result in the maximum current set by this parameter. This current setting is clamped by the controller's rated current.
LOS Max Mod Depth *Enc_LOS_Max_Mod_Depth* `0x3084 0x00`	15–100 % *177–1182*	In LOS mode, the maximum modulation depth acts to limit the current at higher speeds. This parameter should be set such that the modulation depth limit is reached prior to the LOS Max Speed limit, so that the motor current will fall off from LOS Max Current at higher speeds. This may allow the vehicle to drive longer in LOS mode, as it lessens the chance of the motor or controller overheating.
LOS Accel Rate *Enc_LOS_Accel_Rate* `0x3086 0x00`	2.0–15.0 s *2000–15000*	Defines the rate (in seconds) at which the frequency increases when full throttle is applied, while operating in LOS mode. This parameter should be set to a slow rate (high parameter value) so the frequency command has a very slow slew rate to ensure that the max torque point is hit for a reasonable period of time; this decreases the probability of going over the slip curve, and allows ramps or obstacles to be overcome.
LOS Decel Rate *Enc_LOS_Decel_Rate* `0x3087 0x00`	2.0–15.0 s *2000–15000*	Defines the rate (in seconds) at which the frequency decreases when throttle is released, while operating in LOS mode.

Downloaded from www.Manualslib.com manuals search engine

MOTOR: 1-SPM: CHARACTERIZATION TESTS MENU		
PARAMETER	ALLOWABLE RANGE	DESCRIPTION
Test Enable *SPM_AutoChar_Test_Enable* `0x3862 0x00`	0–1 *0–1*	This parameter is used to start the SPM motor characterization procedure. See section 6b for the complete description of the SPM motor characterization procedure.
Test Throtte *Test_Throttle* `0x3034 0x00`	-1–1 *-1–1*	This parameter is used to verify the direction of the motor during SPM motor characterization. See section 6b for the complete description of the SPM motor characterization procedure and how this parameter is used.
Max Test Speed *SPM_AutoChar_Max_Test_Speed* `0x38C1 0x00`	500–6000 rpm *500–6000*	This parameter is used to set the maximum motor speed allowed during SPM motor characterization. See section 6b for the complete description of the SPM motor characterization procedure and how this parameter is used.
Max Test Current *SPM_AutoChar_Max_Test_Current* `0x38C2 0x00`	10–30 % *3277–9831*	This parameter is used to set the maximum motor current allowed during SPM motor characterization. See section 6b for the complete description of the SPM motor characterization procedure and how this parameter is used.

Downloaded from www.Manualslib.com manuals search engine

MOTOR FEEDBACK OPTIONS		
PARAMETER	ALLOWABLE RANGE	DESCRIPTION
Feedback Type *Feedback_Type* `0x382E 0x00`	1–2 *1–2*	Set this parameter to the type of position feedback device in your vehicle: 1 = quadrature encoder 2 = sin/cos sensor. Note: A Parameter Mismatch fault will result unless the Feedback Type matches the Motor Technology setting (see page 55): If Motor Technology = 0 (ACIM), then Feedback Type must = 1 (quadrature encoder). If Motor Technology = 1 (SPM), then Feedback Type must = 2 (sin/cos sensor).
Swap Feedback Direction PCF *Swap_Feedback_Direction* *OptionBits3* [Bit 0] `0x306C 0x00`	On/Off *On/Off*	Changes the motor encoder's effective direction of rotation. The encoder provides data used to calculate motor position and speed. This parameter must be set such that when the motor is turning forward, the controller reports back a positive motor speed. **Positive motor speed must be in the forward direction in order for the emergency reverse feature to operate properly.** Note: Do not change this parameter while the controller is powering the motor. Any time this parameter is changed a Parameter Change Fault (fault code 49) is set and must be cleared by cycling power; this protects the controller and the operator. ***Adjusting this parameter can be hazardous. For instructions, see Section 5, Step ⑪ (page 91).***

MOTOR FEEDBACK 1-ENCODER MENU		
PARAMETER	ALLOWABLE RANGE	DESCRIPTION
Encoder Steps PCF *Encoder_Steps* `0x304B 0x00`	32–256 *32–256*	Sets the number of encoder pulses per revolution. This must be set to match the encoder; see motor nameplate. Note: Do not change this parameter while the controller is powering the motor. Any time this parameter is changed a Parameter Change Fault (fault code 49) is set and must be cleared by cycling power; this protects the controller and the operator. ☞ ***Adjusting this parameter can be hazardous; setting it improperly may cause vehicle malfunction, including uncommanded drive. For instructions, see Section 5, Step ⑧ (page 90).***

Downloaded from www.Manualslib.com manuals search engine

MOTOR FEEDBACK 1-ENCODER: ENCODER FAULT SETUP MENU

PARAMETER	ALLOWABLE RANGE	DESCRIPTION
Fault Detection Enable *Encoder_Fault_Detection_Enable* *Encoder_Fault_Detection_Enable_Bit0* [Bit 0] 0x389C 0x00	On/Off *On/Off*	When programmed On, encoder fault checking is enabled. Three fault conditions are checked: Encoder Fault (fault code 36, Stall Detected (fault code 73), and Encoder Pulse Error (fault code 88).
Encoder Pulse Fault Detect Time *Encoder_Pulse_Fault_Detect_Time* 0x393E 0x00	0.0–3.0 s *0–94*	Defines the minimum time it takes for the controller, while the vehicle is in motion, to detect that the encoder and the Encoder Steps parameter do not match. When the Encoder Steps setup is incorrect, the motor controller cannot properly calculate AC motor field orientation. The loss of field orientation can cause the motor to spin up toward full speed once any throttle is applied. This parameter sets a timer that starts once the throttle has been moved and then released, the drive current is significant, and the motor is still accelerating. Note that the motor can spin at high rpm for several seconds before conditions allow the controller to properly detect a fault. An Encoder Pulse Error (fault code 88) is declared when this fault is detected. Setting the parameter to zero will disable this fault detection.
Fault Stall Time *Enc_Fault_Stall_Time* 0x3089 0x00	0–10 s *0–5000*	Sets a timer when no motor encoder movement is detected. If no motor encoder movement is detected for the programmed Fault Stall time, with maximum throttle applied, a Stall Detected fault (fault code 73) is issued.

MOTOR FEEDBACK 2-SIN/COS MENU

PARAMETER	ALLOWABLE RANGE	DESCRIPTION
Sin Cos Fault Threshold *Sin_Cos_Fault_Threshold* 0x3878 0x00	5.0–20.0 % *51–205*	Defines the allowable percent change in the Sin or Cos feedback. A Sin/Cos Sensor Fault (fault code 36) is declared if this threshold is exceeded five times sequentially.
Sin Min *Feedback_Sin_Min* 0x3863 0x00	0–1023 *0–1023*	Minimum output by the Sin/Cos sensor on the Sin channel. Input detected at Position Feedback A (pin 31). The value is set during the SPM motor characterization procedure.
Sin Max *Feedback_Sin_Max* 0x385C 0x00	0–1023 *0–1023*	Maximum output by the Sin/Cos sensor on the Sin channel. Input detected at Position Feedback A (pin 31). The value is set during the SPM motor characterization procedure.
Cos Min *Feedback_Cos_Min* 0x385F 0x00	0–1023 *0–1023*	Minimum output by the Sin/Cos sensor on the Cos channel. Input detected at Position Feedback B (pin 32). The value is set during the SPM motor characterization procedure.
Cos Max *Feedback_Cos_Max* 0x382F 0x00	0–1023 *0–1023*	Maximum output by the Sin/Cos sensor on the Cos channel. Input detected at Position Feedback B (pin 32). The value is set during the SPM motor characterization procedure.

Downloaded from www.Manualslib.com manuals search engine

MOTOR TEMPERATURE CONTROL MENU		
PARAMETER	ALLOWABLE RANGE	DESCRIPTION
Sensor Enable *MotorTemp_Sensor_Enable* *OptionBits3* [Bit 1] `0x306C 0x00`	On/Off *On/Off*	When programmed On, the motor temperature cutback and the motor temperature compensation features are enabled. This parameter can be used only if a temperature sensor has been properly configured. The motor temperature cutback feature will linearly cut back the current from 100% to 0% between the Temperature Hot and Temperature Max temperatures. The motor temperature compensation feature will adapt the motor control algorithms to varying motor temperatures, for improved efficiency and more consistant performance.
Sensor Type *MotorTemp_Sensor_Type* `0x307B 0x00`	1–5 *1–5*	Five sensor types are predefined in the software:. Type 1 KTY83–122 Type 2 2× Type 1, in series Type 3 KTY84–130 or KTY84–150 Type 4 2× Type 3, in series Type 5 PT1000. Custom sensor types can be set up easily, if none of the five predefined types is appropriate for your application. Please contact your Curtis distributor or support engineer. Note: The industry standard KTY temperature sensors are silicon temperature sensors with a polarity band; **the polarity band of a KTY sensor must be the end connected to I/O Ground** (pin 7).
Sensor Temp Offset *MotorTemp_Sensor_Offset* `0x304A 0x00`	-20 – 20 °C *-200–200*	Often the sensor is placed in the motor at a location with a known offset to the critical temperature; the offset can be corrected with this parameter. The parameter can also be used to correct a known offset in the sensor itself.
Braking Thermal Cutback Enable *BrakingThermalCutback_Enable* *BrakingThermalCutback_Enable_Bit0* [Bit0] `0x386C 0x00`	On/Off *On/Off*	When programmed On, drive current and all forms of regen braking current will be cut back based on motor temperature. All forms of regen braking current (Regen_Current_Limit, Brake_Current_Limit, EMR_Current_Limit, Interlock_Brake_Current_Limit) includes emergency reverse braking, interlock braking, brake input braking, direction reversal braking, neutral braking, and speed limit braking. When programmed Off, only drive current (and not the regen braking currents) will be cut back based on motor temperature. If the vehicle has mechanical brakes, setting this parameter to On may help reduce motor heating.
Temperature Hot *MotorTemp_Hot* `0x304E 0x00`	0–250 °C *0–2500*	Defines the temperature at which current cutback begins.
Temperature Max *MotorTemp_Max* `0x304F 0x00`	0–250 °C *0–2500*	Defines the temperature at which current is cut back to zero.
MotorTemp LOS Max Speed *MotorTemp_LOS_Max_Speed* `0x308A 0x00`	100–3000 rpm *100–3000*	When a Motor Temp Sensor Fault (fault code 29) is set, a LOS (Limited Operating Strategy) mode is engaged. The maximum speed is reduced to the programmed Max Speed in the operating mode (Max_Speed_SpdMx, Max_Speed_SpdM, Max_Speed_TrqM) ***or*** to the MotorTemp_LOS_Max_Speed, whichever is lower.

Downloaded from www.Manualslib.com manuals search engine

BATTERY MENU

PARAMETER	ALLOWABLE RANGE	DESCRIPTION
Nominal Voltage *Nominal_Voltage* `0x3048 0x00`	24–96 V *1536–6144*	Must be set to the vehicle's nominal battery pack voltage. This parameter is used in determining the overvoltage and undervoltage protection thresholds for the electronic system. Overvoltage protection cuts back regen braking to prevent damage to batteries and other electrical system components due to overvoltage. Undervoltage protection prevents systems from operating at voltages below their design thresholds. The four threshold points are calculated from the Nominal Voltage, Undervoltage Kp and Ki, User Overvoltage, and User Undervoltage parameter settings and the controller's minimum voltage and maximum voltage ratings. Overvoltage = Either Max Voltage (see Table D-1) *or* User Overvoltage × Nominal Voltage, whichever is lower. Severe Overvoltage = Overvoltage (see previous item) + 10V. Undervoltage = Either Min Voltage (see Table D-1) *or* User Undervoltage × Nominal Voltage, whichever is higher. Severe Undervoltage = Either drive current cut back to 0% for 64 ms *or* Brownout Voltage∗ (see Table D-1) is reached, whichever comes first. ∗ The Brownout Voltage is determined by the controller base type and cannot be changed. When the capacitor voltage falls below the Brownout voltage the bridge is switched off (i.e., motor current is switched off). If the capacitor voltage stays below the Brownout voltage for > 64 milliseconds the controller will reset (equivalent to cycling the keyswitch). If the capacitor voltage rises above the Brownout voltage before 64 ms have passed the bridge will be reenabled. The Severe Undervoltage point cannot be set lower than the Brownout voltage.
Kp UV *Batt_Kp_UV* `0x380E 0x00`	0.0–100.0 %/V *0–1024*	When the battery voltage goes below the undervoltage threshold (as set above), a closed loop PI (Proportional/Integral) controller is enabled in an attempt to keep the battery voltage from drooping. It accomplishes this by cutting back the drive current, thereby reducing the load on the battery. The Kp term is the proportional gain and is set in units of % cutback per volt; for example, a setting of 25 would provide full current cutback with 4 V of droop. The Ki term is the integral gain. Integral gain will accumulate the voltage droop and attempt to bring the battery droop back to 0 V. Higher gains will react more strongly and quickly. Typically, Kp UV and Ki UV are used together to provide the best response. If the linear response of the previous AC controllers is preferred, set Ki UV = 0.
Ki UV *Batt_Ki_UV* `0x380F 0x00`	0–100 % *0–16384*	

Downloaded from www.Manualslib.com manuals search engine

BATTERY MENU, cont'd		
PARAMETER	ALLOWABLE RANGE	DESCRIPTION
User Overvoltage *User_Overvoltage* `0x3049 0x00`	105–200 % *269–512*	The value of this parameter is a percentage of the Nominal Voltage setting. The User Overvoltage parameter can be used to adjust the overvoltage threshold, which is the voltage at which the controller will cut back regen braking to prevent damage to the electrical system. Typically this parameter is changed only when the controller is being used in an application at the low end of the controller's range: such as a 48–80V controller being used in a system with a 48V battery pack. In this case, the overvoltage threshold can be raised by setting the User Overvoltage to a higher value. The overvoltage threshold can never be raised above the controller's power base maximum voltage rating.
User Undervoltage *User_Undervoltage* `0x304A 0x00`	0–95 % *0–242*	The value of this parameter is a percentage of the Nominal Voltage setting. The User Undervoltage parameter can be used to adjust the undervoltage threshold, which is the voltage at which the controller will cut back drive current to prevent damage to the electrical system. Typically this parameter is changed only when the controller is being used in an application at the high end of the controller's range: such as a 24–36V controller being used in a system with a 36V battery pack. In this case, the undervoltage threshold can be lowered by setting the User Undervoltage to a lower value. The undervoltage threshold can never be lowered below the controller's power base minimum voltage rating.

BDI Algorithm

The BDI (battery discharge indicator) algorithm continuously calculates the battery state-of-charge whenever KSI is on. The result of the BDI algorithm is the variable BDI Percentage, which is viewable in the programmer's Monitor » Battery menu. When KSI is turned off, the present BDI Percentage is stored in nonvolatile memory.

The standard values for volts per cell are as follows, for flooded lead acid and sealed maintenance-free batteries.

	BATTERY TYPE	
	FLOODED	SEALED
Reset Volts Per Cell	2.09	2.09
Full Volts Per Cell	2.04	2.04
Empty Volts Per Cell	1.73	1.90

Use the standard values for your type of batteries as the starting point in setting the reset, full, and empty volts-per-cell parameters.

Downloaded from www.Manualslib.com manuals search engine

BATTERY MENU, cont'd		
PARAMETER	ALLOWABLE RANGE	DESCRIPTION
Reset Volts Per Cell *BDI_Reset_Volts_Per_Cell* `0x3170 0x00`	0.900–3.000 V *900–3000*	The reset voltage level is checked only once, when KSI is first turned on. Note that the BDI Reset Percent parameter also influences the algorithm that determines whether BDI Percentage is reset to 100%. Reset Volts Per Cell should always be set higher than Full Volts Per Cell. Reset Voltage Level = Reset Volts Per Cell × number of cells in the battery pack.*
Full Volts Per Cell *BDI_Full_Volts_Per_Cell* `0x3171 0x00`	0.900–3.000 V *900–3000*	The full voltage level sets the Keyswitch Voltage that is considered to be 100% state-of-charge; when a loaded battery drops below this voltage, it begins to lose charge. Keyswitch Voltage is viewable in the programmer's Monitor » Battery menu. Full Voltage Level = Full Volts Per Cell × number of cells in the battery pack.*
Empty Volts Per Cell *BDI_Empty_Volts_Per_Cell* `0x3172 0x00`	0.900–3.000 V *900–3000*	The empty voltage level sets the Keyswitch Voltage that is considered to be 0% state-of-charge. Empty Voltage Level = Empty Volts Per Cell × number of cells in the battery pack.*
Discharge Time *BDI_Discharge_Time* `0x3173 0x00`	0–600 minutes *0–600*	Sets the minimum time for the BDI algorithm to count down the BDI Percentage from 100% to 0%. The BDI algorithm integrates the time the filtered keyswitch voltage is below the state of charge voltage level. When that cumulative time exceeds the Discharge Time / 100, the BDI Percentage is decremented by one percentage point and a new state of charge voltage level is calculated. State of Charge Level = ((Full Voltage Level - Empty Voltage Level) × BDI Percentage / 100) + Empty Voltage Level.
BDI Reset Percent *BDI_Reset_Percent* `0x3174 0x00`	0–100 % *0–100*	When a battery has a high BDI percentage, its float voltage at KSI On can sometimes cause false resets. The BDI Reset Percent parameter addresses this problem by allowing the user to define a BDI Percentage value above which the BDI Percentage variable will not reset. When KSI is first powered on, the BDI Percentage variable will reset to 100% only if ((Keyswitch Voltage > Reset Voltage Level) and (BDI Percentage < BDI Reset Percent)).

* To determine the number of cells in the battery pack, divide the Nominal Voltage setting (page 64) by the battery chemistry's nominal volts-per-cell.

Lead Acid: 2.0 V/cell, nominal.
Other: Consult the manufacturer's data sheet.

DUAL DRIVE MENU
FOR DUAL DRIVE PARAMETERS, SEE THE DUAL DRIVE MANUAL, P/N 53134-DD.

Downloaded from www.Manualslib.com manuals search engine

VEHICLE MENU		
PARAMETER	ALLOWABLE RANGE	DESCRIPTION
Metric Units *Metric_Units* *OptionBits3* [Bit 5] 0x306C 0x00	On/Off *On/Off*	When this parameter is programmed On, the distance variables (Vehicle Odometer, Braking Distance Captured, Distance Since Stop, Distance Fine, and the Capture Distance variables) will accumulate and display in metric units (km, meters, or decimeters). When programmed Off, the distance variables will accumulate and display in English units (miles, feet, or inches). Distance variables are displayed in the Monitor » Vehicle menu, page 83.
Speed to RPM *Speed_to_RPM* 0x304C 0x00	10.0–3000.0 *100–30000*	This parameter affects the vehicle speed displayed in the Monitor » Motor menu (see page 79), and also modifies the VCL variable *Vehicle_Speed*; it does not affect actual vehicle performance. The value entered for Speed to RPM is a conversion factor that scales motor speed to vehicle speed. KPH to RPM: (G/d)*5305, where G = gear ratio, d = tire diameter [mm]. MPH to RPM: (G/d)*336.1, where G = gear ratio, d = tire diameter [in].
Capture Speed 1 *Capture_Speed_1* 0x3079 0x00	0–8000 rpm *0–8000*	The controller captures the time it takes the motor to go from 0 rpm to the programmed Capture Speed. The result is stored as “Time to Speed 1” in the Monitor » Vehicle menu (page 83). This timer starts every time the motor accelerates from zero speed.
Capture Speed 2 *Capture_Speed_2* 0x3886 0x00	0–8000 rpm *0–8000*	This parameter allows a second capture speed to be defined, and works identically to Capture Speed 1. The result is stored as “Time to Speed 2” in the Monitor » Vehicle menu (page 83).
Capture Distance 1 *Capture_Distance_1* 0x307A 0x00	1–1320 *1–1320*	The controller captures the time it takes the vehicle to travel from 0 rpm to the programmed Capture Distance. The result is stored as “Time to Dist 1” in the Monitor » Vehicle menu (page 83). This timer starts every time the vehicle accelerates from zero speed. Note: For accurate distance measuring, the Speed to RPM parameter must be set correctly. With the Metric Units parameter programmed Off, distance is in units of feet. With Metric Units programmed On, distance is in units of meters.
Capture Distance 2 *Capture_Distance_2* 0x3883 0x00	1–1320 *1–1320*	This parameter allows a second capture distance to be defined, and works identically to Capture Distance 1. The result is stored as “Time to Dist 2” in the Monitor » Vehicle menu.
Capture Distance 3 *Capture_Distance_3* 0x3884 0x00	1–1320 *1–1320*	This parameter allows a third capture distance to be defined, and works identically to Capture Distance 1. The result is stored as “Time to Dist 3” in the Monitor » Vehicle menu.

Downloaded from www.Manualslib.com manuals search engine

EMERGENCY REVERSE MENU **[SPEED MODE & SPEED MODE EXPRESS only]**

PARAMETER	ALLOWABLE RANGE	DESCRIPTION
EMR Enable *EMR_Enable* *OptionBits1* [Bit 1] `0x306A 0x00`	On/Off *On/Off*	Determines whether the emergency reverse function is active. On = emergency reverse is enabled. Off = emergency reverse is disabled.
EMR Type *EMR_Type* `0x3036 0x00`	0–3 *0–3*	Determines where the input comes from for emergency reverse. 0 = emergency reverse activated by switch 1 (pin 24). 1 = emergency reverse is activated by VCL functions Enable_Emer_Rev() and Disable_Emer_Rev(). 2 = emergency reverse activated by switch 1 (pin 24), but only if the vehicle is moving forward (forks trailing) when emergency reverse is activated. 3 = emergency reverse is activated by VCL functions Enable_Emer_Rev() and Disable_Emer_Rev(), but only if the vehicle is moving forward (forks trailing) when emergency reverse is activated.
EMR Dir Interlock *EMR_Dir_Interlock* *EMR_Dir_Interlock_Bit0* [Bit 0] `0x389F 0x00`	On/Off *On/Off*	Determines whether the interlock switch must be turned off after emergency reverse before the vehicle can be driven again. On = interlock and throttle and direction must all be cleared. Off = only throttle and direction must be cleared.
EMR Time Limit *EMR_Time_Limit* `0x303B 0x00`	0.0–30.0 s *0–3750*	Defines how long emergency reverse is allowed to be active after the vehicle is moving in the reverse direction. This timer will restart if the vehicle ever goes forward while emergency reverse is still active. The allowable range is 0–30 seconds, where 30 seconds is a special case of no time out. When emergency reverse times out, the Emer Rev Timeout fault is set. Cycling the emergency reverse input will clear the Emer Rev Timeout fault. To stop the vehicle after an EMR event (not move in reverse direction), set this parameter to 0.
EMR Speed *EMR_Speed* `0x3038 0x00`	50–6000 rpm *50–6000*	Defines the maximum reverse speed of the motor (in motor rpm), when emergency reverse is active. The motor speed in reverse during an emergency reverse event will be the lesser of EMR_Speed and either Max_Speed_SpdMx (for Speed Mode Express) or Max_Speed_SpdM (for Speed Mode). Emergency Reverse is not valid for Torque Mode. See Fig.16, Control Mode Processing, on page 118.
EMR Accel Rate *EMR_Accel_Rate* `0x3039 0x00`	0.1–3.0 s *100–3000*	Sets the rate (in seconds) at which the vehicle accelerates in the opposite direction after it has been brought to a stop. If the vehicle is already traveling in the reverse direction below the EMR Speed, the EMR Accel Rate will bring the vehicle to the EMR Speed.
EMR Decel Rate *EMR_Decel_Rate* `0x303A 0x00`	0.1–3.0 s *100–3000*	Sets the rate (in seconds) at which the vehicle brakes to a stop when emergency reverse is activated and the vehicle is moving forward. If the vehicle is already traveling in the reverse direction above the EMR Speed, the EMR Decel Rate will bring the vehicle down to the EMR Speed.

Downloaded from www.Manualslib.com manuals search engine

INTERLOCK BRAKING MENU		
PARAMETER	ALLOWABLE RANGE	DESCRIPTION
Enable *Interlock_Brake_Enable* *OptionBits3* [Bit 7] `0x306C 0x00`	On/Off *On/Off*	Determines whether the interlock braking function is active. On = The controller will attempt to bring the vehicle to a stop using regen braking when the interlock signal is removed. Off = The controller will disable the bridge after Sequencing Delay expires and allow the vehicle to roll freely when the interlock signal is removed. This option is typically used only when there is a user controlled mechanical or hydraulic brake system.
Decel Rate HS *Interlock_Brake_Decel_Rate_HS* `0x309F 0x00`	0.1–30.0 *100–30000*	Sets the rate (in seconds) that is used to slow down the vehicle when the interlock is released at high vehicle speeds. Larger values represent slower response.
Decel Rate LS *Interlock_Brake_Decel_Rate_LS* `0x309E 0x00`	0.1–30.0 *100–30000*	Sets the rate (in seconds) that is used to slow down the vehicle when the interlock is released at low vehicle speeds. Larger values represent slower response.
Interlock Brake Timeout *Interlock_Brake_Timeout* `0x309C 0x00`	0.0–8.0 s *0–1000*	Controls the maximum allowable duration of an interlock braking event. The timer starts as soon as the interlock signal is removed. If the time expires before the vehicle has slowed below the Set_Speed_Threshold, the EM brake will engage automatically. This timeout allows parallel usage of regen braking and the EM brake to reduce stopping distance. If Interlock Brake Timeout expires and the motor is still moving, regen braking will continue to retard vehicle motion in conjunction with the EM brake. *Note: This parameter is only applicable when EM_Brake_Type = 1 or 2 (see page 48).*

Downloaded from www.Manualslib.com manuals search engine

CAN INTERFACE MENU

PARAMETER	ALLOWABLE RANGE	DESCRIPTION
CANopen Interlock *CANopen_Interlock_Enable* *OptionBits3* [Bit 2] 0x306C 0x00	On/Off *On/Off*	When programmed On, CAN NMT State must = 5 (operational state) in order for the interlock to be set; see Monitor » CAN Status menu, page 85.
CAN Node ID 1 *CAN_Node_ID_1* 0x3140 0x00	1–127 *1–127*	The Node ID for the primary microprocessor is determined by the state of switches 5 and 6 at KSI turn on: Node_ID_1 is selected when Sw 6 = Off and Sw 5 = Off Node_ID_2 is selected when Sw 6 = Off and Sw 5 = On Node_ID_3 is selected when Sw 6 = On and Sw 5 = Off Node_ID_4 is selected when Sw 6 = On and Sw 5 = On. If the selected parameter has a Node ID of zero, the Node_ID_1 parameter is used. If the Node_ID_1 parameter is also zero, a default ID of 38 is used.
CAN Node ID 2 *CAN_Node_ID_2* 0x3141 0x00	1–127 *1–127*	See description of Node ID 1.
CAN Node ID 3 *CAN_Node_ID_3* 0x3146 0x00	1–127 *1–127*	See description of Node ID 1.
CAN Node ID 4 *CAN_Node_ID_4* 0x3147 0x00	1–127 *1–127*	See description of Node ID 1.
Supervisor Node ID *Supervisor_Node_ID* 0x3872 0x00	1–127 *1–127*	Sets the Node ID for the supervisor microprocessor. The Node ID is the first 7 bits of the 11-bit identifier (the COB ID).
Baud Rate *CAN_Baud_Rate* 0x3142 0x00	-3 – 4 *-3 – 4*	Sets the CAN baud rate for the CANopen Slave system: -3 = 20 kbit/s, -2 = 50 kbit/s, -1 = 100 kbit/s, 0 = 125 kbit/s, 1 = 250 kbit/s, 2 = 500 kbit/s, 3 = 800 kbit/s, 4 = 1000 kbit/s.
Heartbeat Rate *CANopen_Heart_Beat_Rate* 0x1017 0x00	16–200 ms *4–50*	Sets the rate at which the CAN heartbeat messages are sent from the CANopen Slave system.
PDO Timeout Period *CAN_PDO_Timeout_Period* 0x3149 0x00	0–200 ms *0–50*	Sets the PDO timeout period for the CANopen Slave system. After the slave controller has sent a PDO MISO, it will declare a PDO Timeout Fault if the master controller has not sent a reply PDO MOSI message within the set time. Either PDO1 MOSI or PDO2 MOSI will reset the timer. Setting the PDO Timeout Period = 0 will disable this fault check.

Downloaded from www.Manualslib.com manuals search engine

CAN INTERFACE MENU, cont'd

PARAMETER	ALLOWABLE RANGE	DESCRIPTION
Emergency Message Rate *CANopen_Emergency_Rate* `0x3148 0x00`	16–200 ms *4–50*	Sets the minimum rate between CAN emergency messages from the CANopen Slave system. This prevents quickly changing fault states from generating so many emergency messages that they flood the CAN bus.
Suppress CANopen Init *Suppress_CANopen_Init* `0x3143 0x00`	0–1 *0–1*	When Suppress CANopen Init is set = 1, at KSI On the initialization of the CANopen system is suppressed. Typically this is done so that the VCL program can make changes to the CANopen system before enabling it (by setting the variable Suppress_CANopen_Init = 0 and running the Setup_CAN() function).

RESET CONTROLLER PARAMETER

PARAMETER	ALLOWABLE RANGE	DESCRIPTION
Reset Controller *ResetController* `0x3B05 0x00`	0–1 *0–1*	Setting this parameter = 1 will reset the controller. This reset is similar to resetting by cycling the keyswitch. Reset Controller has the advantage of resetting without causing the parameter block to be reloaded into the 1313/1314 programmer.

CLONING (for copying parameter settings to multiple controllers)

Once a controller has been programmed to the desired settings, these settings can be transferred as a group to other controllers, thus creating a family of "clone" controllers with identical settings. **Cloning only works between controllers with the same model number and software version.** For example, the programmer can read all the information from a 1236E-5421 controller and write it to other 1236E-5421 controllers; however, it cannot write that same information to 1236E-5521 or to 1236SE-5621 controllers.

To perform cloning, plug the programmer (1313 or 1314) into the controller that has the desired settings. Select the Program menu; follow the prompts to copy the settings into the programmer.

Plug the programmer into the controller that you want to have these same settings, and follow the Program menu prompts to write these settings into the controller.

Note: For cloning Dual Drive controllers, see the separate Dual Drive manual, p/n 53134-DD.

Downloaded from www.Manualslib.com manuals search engine

4a

MONITOR MENU

Through its Monitor menu, the 1313 handheld and 1314 PC programmers provide access to real-time data during vehicle operation. This information is helpful during diagnostics and troubleshooting, and also while adjusting programmable parameters.

Table 4 Monitor Menu: 1313/1314 Programmer

INPUTS MENU ..... p. 74
- Throttle Command
- Throttle Multiplier
- Mapped Throttle
- Throttle Pot
- Brake Command
- Mapped Brake
- Pot2 Raw
- PD Throttle
- Steer Pot
- Steer Angle (deg)
- Interlock
- Emer Rev
- Analog 1
- Analog 2
- Switch 1
- Switch 2
- Switch 3
- Switch 4
- Switch 5
- Switch 6
- Switch 7
- Switch 8
- Driver 1 Input
- Driver 2 Input
- Driver 3 Input
- Driver 4 Input
- PD Input
- DigOut6 Input
- DigOut7 Input
- Switch 16

OUTPUTS MENU ..... p. 77
- Analog Out
- Digital Out 6
- Digital Out 7
- Driver 1 PWM
- Driver 2 PWM
- Driver 3 PWM
- Driver 4 PWM
- PD PWM
- PD Current
- 5 Volts
- 12 Volts
- Ext Supply Current
- Pot Low

BATTERY MENU ..... p. 78
- BDI
- Capacitor Voltage
- Keyswitch Voltage

MOTOR MENU ..... p. 79
- Motor RPM
- Max Speed Controller Limit
- Temperature
- MotorSpeed A
- MotorSpeed B
- Sin Input A
- Cos Input B
- Rotor Position

Downloaded from www.Manualslib.com manuals search engine

Table 4 Monitor Menu: 1313/1314 Programmer, cont'd

- **CONTROLLER MENU** ..... p. 80
  - Current (RMS)
  - Modulation Depth
  - Frequency
  - Temperature
  - Main State
  - EMBrake State
  - Regen
  - Master Timer
  - VCL Error Module
  - VCL Error
  - SPM AutoChar Status
  - Motor Characterization Error
  - Parameter Mismatch Error
  - Supervision Error
  - **Cutbacks** ..... p. 82
    - Motor Temp Cutback
    - Controller Temp Cutback
    - Undervoltage Cutback
    - Overvoltage Cutback
  - **Motor Tuning** ..... p. 82
    - Motor RPM
    - Base Speed Captured
    - Test Field Current
    - Following Error

- **VEHICLE MENU** ..... p. 83
  - Vehicle Speed
  - Vehicle Odometer
  - Vehicle Acceleration
  - Time to Speed 1
  - Time to Speed 2
  - Time Between Speeds
  - Time to Dist 1
  - Time to Dist 2
  - Time to Dist 3
  - Braking Distance Captured
  - Distance Since Stop
  - Distance Fine

- **CAN STATUS MENU** ..... p. 85
  - CAN Node ID
  - CAN NMT State
  - PDO1 MOSI Byte Map
  - PDO1 MISO Byte Map
  - PDO2 MOSI Byte Map
  - PDO2 MISO Byte Map

Downloaded from www.Manualslib.com manuals search engine

Monitor Menu: INPUTS

VARIABLE	DISPLAY RANGE	DESCRIPTION
Throttle Command *Throttle_Command* 0x3216 0x00	-100.0–100.0 % *-32767–32767*	Throttle request to slew rate block.
Throttle Multiplier *Throttle_Multiplier* 0x3213 0x00	-200.0–200.0 % *-256–256*	Multiplies or divides the throttle signal; useful in VCL throttle processing (see page 113).
Mapped Throttle *Mapped_Throttle* 0x3211 0x00	-100.0–100.0 % *-32767–32767*	Mapped throttle request.
Throttle Pot *Throttle_Pot_Raw* 0x3215 0x00	0.00–5.50 V *0–36044*	Voltage at throttle pot wiper (pin 16).
Brake Command *Brake_Command* 0x321A 0x00	0.0–100.0 % *0–32767*	Brake request to slew rate block.
Mapped Brake *Mapped_Brake* 0x3212 0x00	0.0–100.0 % *0–32767*	Mapped brake request.
Pot2 Raw *Pot2_Raw* 0x3217 0x00	0.00–5.50 V *0–36044*	Voltage at pot2 wiper (pin 17).
PD Throttle *PD_Throttle* 0x3210 0x00	0.00–100.00 % *0–32766*	Proportional driver current request.
Steer Pot *Steer_Pot_Raw* 0x38BB 0x00	0.00–6.25 V *0–32767*	Voltage at steer pot wiper (pin 17) on Dual Drive traction slave.
Steer Angle *Steer_Angle* 0x38BA 0x00	-90 – 90 *-90 – 90*	Steer angle degrees calculated in Dual Drive traction master.
Interlock *Interlock_State* *System_Flags1* [Bit 0] 0x322B 0x00	On/Off *On/Off*	Interlock input on or off. The source of the interlock input is determined by the Interlock Type parameter: from Switch 3 (pin 9) if Interlock Type = 0 from VCL function if Interlock Type = 1 from KSI (pin 1) if Interlock Type = 2.
Emer Rev *EMR_State* *System_Flags1* [Bit 1] 0x322B 0x00	On/Off *On/Off*	Emergency reverse input on or off. The source of the emergency reverse input is determined by the EMR Type parameter: from Switch 1 (pin 24) if EMR Type = 0 from VCL function if EMR Type = 1.

Downloaded from www.Manualslib.com manuals search engine

Monitor Menu: INPUTS, cont'd

VARIABLE	DISPLAY RANGE	DESCRIPTION
Analog 1 *Analog1_Input* 0x3204 0x00	0.00–10.00 V *0–1023*	Voltage at analog 1 (pin 24).
Analog 2 *Analog2_Input* 0x3205 0x00	0.00–10.00 V *0–1023*	Voltage at analog 2 (pin 8).
Switch 1 *Sw_1* *Switches* [Bit 0] 0x3226 0x00	On/Off *On/Off*	Switch 1 on or off (pin 24).
Switch 2 *Sw_2* *Switches* [Bit 1] 0x3226 0x00	On/Off *On/Off*	Switch 2 on or off (pin 8).
Switch 3 *Sw_3* *Switches* [Bit 2] 0x3226 0x00	On/Off *On/Off*	Switch 3 on or off (pin 9).
Switch 4 *Sw_4* *Switches* [Bit 3] 0x3226 0x00	On/Off *On/Off*	Switch 4 on or off (pin 10).
Switch 5 *Sw_5* *Switches* [Bit 4] 0x3226 0x00	On/Off *On/Off*	Switch 5 on or off (pin 11).
Switch 6 *Sw_6* *Switches* [Bit 5] 0x3226 0x00	On/Off *On/Off*	Switch 6 on or off (pin 12).
Switch 7 *Sw_7* *Switches* [Bit 6] 0x3226 0x00	On/Off *On/Off*	Switch 7 on or off (pin 22).
Switch 8 *Sw_8* *Switches* [Bit 7] 0x3226 0x00	On/Off *On/Off*	Switch 8 on or off (pin 33).

Downloaded from www.Manualslib.com manuals search engine

Monitor Menu: INPUTS, cont'd

VARIABLE	DISPLAY RANGE	DESCRIPTION
Driver 1 Input *Sw_9* *Switches* [Bit 8] 0x3226 0x00	On/Off *On/Off*	Driver 1 input on or off (pin 6).
Driver 2 Input *Sw_10* *Switches* [Bit 9] 0x3226 0x00	On/Off *On/Off*	Driver 2 input on or off (pin 5).
Driver 3 Input *Sw_11* *Switches* [Bit 10] 0x3226 0x00	On/Off *On/Off*	Driver 3 input on or off (pin 4).
Driver 4 Input *Sw_12* *Switches* [Bit 11] 0x3226 0x00	On/Off *On/Off*	Driver 4 input on or off (pin 3).
PD Input *Sw_13* *Switches* [Bit 12] 0x3226 0x00	On/Off *On/Off*	Proportional driver on or off (pin 2).
DigOut6 Input *Sw_14* *Switches* [Bit 13] 0x3226 0x00	On/Off *On/Off*	Digital Out 6 input on or off (pin 19).
DigOut7 Input *Sw_15* *Switches* [Bit 14] 0x3226 0x00	On/Off *On/Off*	Digital Out 7 input on or off (pin 20).
Switch 16 *Sw_16* *Switches* [Bit 15] 0x3226 0x00	On/Off *On/Off*	Switch 16 on or off (pin 14).

Downloaded from www.Manualslib.com manuals search engine

Monitor Menu: OUTPUTS

VARIABLE	DISPLAY RANGE	DESCRIPTION
Analog Out *Analog_Output* `0x321D 0x00`	0.00–10.00 V *0–32767*	Voltage at Analog output (pin 30).
Digital Out 6 *Dig6_Output* *System_Flags1* [Bit 3] `0x322B 0x00`	On/Off *On/Off*	Digital Out 6 output on or off (pin 19).
Digital Out 7 *Dig7_Output* *System_Flags1* [Bit 4] `0x322B 0x00`	On/Off *On/Off*	Digital Out 7 output on or off (pin 20).
Driver 1 PWM *PWM1_Output* `0x321F 0x00`	0–100 % *0–32767*	Driver 1 PWM output (pin 6).
Driver 2 PWM *PWM2_Output* `0x3220 0x00`	0–100 % *0–32767*	Driver 2 PWM output (pin 5).
Driver 3 PWM *PWM3_Output* `0x3221 0x00`	0–100 % *0–32767*	Driver 3 PWM output (pin 4).
Driver 4 PWM *PWM4_Output* `0x3222 0x00`	0–100 % *0–32767*	Driver 4 PWM output (pin 3).
PD PWM *PD_Output* `0x321E 0x00`	0–100 % *0–32767*	Proportional driver PWM output (pin 2).
PD Current *PD_Current* `0x321C 0x00`	0.00–2.00 A *0–607*	Current at proportional driver (pin 2).
5 Volts *Five_Volts_Output* `0x3202 0x00`	0.00–6.25 V *0–1023*	Voltage at +5V output (pin 26).
12 Volts *Twelve_Volts_Output* `0x3522 0x00`	0.00–12.00 V *0–768*	Voltage at +12V output (pin 25).

Downloaded from www.Manualslib.com manuals search engine

Monitor Menu: OUTPUTS, cont'd		
VARIABLE	DISPLAY RANGE	DESCRIPTION
Ext Supply Current *Ext_Supply_Current* 0x3229 0x00	0–200 mA *0–800*	Combined current of the external +12V and +5V voltage supplies (pins 25 and 26).
Pot Low *Pot_Low_Output* 0x3203 0x00	0.00–6.25 V *0–1023*	Voltage at pot low (pin 18).

Monitor Menu: BATTERY		
VARIABLE	DISPLAY RANGE	DESCRIPTION
BDI *BDI_Percentage* 0x3308 0x00	0–100 % *0–100*	Battery state of charge.
Capacitor Voltage *Capacitor_Voltage* 0x324C 0x00	0.0–200.0 V *0–12800*	Voltage of controller's internal capacitor bank at B+ terminal.
Keyswitch Voltage *Keyswitch_Voltage* 0x324D 0x00	0.0–105.0 V *0–10500*	Voltage at KSI (pin 1).

Downloaded from www.Manualslib.com manuals search engine

Monitor Menu: MOTOR

VARIABLE	DISPLAY RANGE	DESCRIPTION
Motor RPM *Motor_RPM* `0x3207 0x00`	-12000–12000 rpm *-32768–32767*	Motor speed in revolutions per minute.
Max Speed Controller Limit *Max_Speed_Controller_Limit* `0x3559 0x00`	0–1200 rpm *0–12000*	Displays the maximum allowed speed, which clamps the upper limit of the Max Speed parameters. It is the least of the three constraints described on page 29.
Temperature *Motor_Temperature* `0x320B 0x00`	-100–300 °C *-1000–3000*	Temperature sensor readout.
MotorSpeed A *MotorspeedA* `0x35D1 0x00`	-12000–12000 rpm *-12000–12000*	Motor encoder phase A speed in revolutions per minute. This can be used to verify that phase A of the encoder is operating correctly. MotorSpeed A should equal MotorSpeed B in a properly operating motor encoder.
MotorSpeed B *MotorspeedB* `0x35D2 0x00`	-12000–12000 rpm *-12000–12000*	Motor encoder phase A speed in revolutions per minute. This can be used to verify that phase B of the encoder is operating correctly. MotorSpeed B should equal MotorSpeed A in a properly operating motor encoder.
Sin Input A *encoder_sin_input_ compensated* `0x38C5 0x00`	0–1023 *0–1023*	Input at Position Feedback A (pin 31).
Cos Input B *encoder_cos_input_ compensated* `0x38C6 0x00`	0–1023 *0–1023*	Input at Position Feedback B (pin 32).
Rotor Position *rotor_position_raw* `0x38C7 0x00`	-32768–32767 *-32768–32767*	The displayed value will never exceed 4095. 0–4095 maps to mechanical 0°–360°.

Downloaded from www.Manualslib.com manuals search engine

Monitor Menu: CONTROLLER

VARIABLE	DISPLAY RANGE	DESCRIPTION
Current (RMS) *Current_RMS* 0x3209 0x00	0.0–1000.0 A *0–10000*	RMS current of the controller, taking all three phases into account.
Modulation Depth *Modulation_Depth* 0x3208 0x00	0.0–100.0 % *0–1182*	Percentage of available voltage being used.
Frequency *Frequency* 0x3206 0x00	-500–500 Hz *-3000–3000*	Controller electrical frequency.
Temperature *Controller_Temperature* 0x322A 0x00	-100–300 °C *-1000–3000*	Controller internal temperature.
Main State *Main_State* 0x3223 0x00	0– 10 *0– 10*	Main contactor state: 0= open 1= precharge 2= weld check 3= closing delay 4= missing check 5= closed (when Main Enable = On) 6= delay 7= arc check 8= open delay 9= fault 10= closed (when Main Enable = Off).
EMBrake State *EMBrakeState* 0x3892 0x00	0– 4 *0– 4*	EM brake state: 0= engaged 1= releasing 2= released 3= engaging 4= engaged and vehicle stopped.
Regen *Regen_State* *System_Flags1* [Bit 2] 0x322B 0x00	On/Off *On/Off*	On when regen braking is taking place; Off when it is not.
Master Timer *Master_Timer* 0x3160 0x00	0–429496729.5 s *0–4294967295*	The master timer is a timer of the total hours the controller is powered on (keyswitch hours). The master timer is controlled by the OS software and cannot be reset.
VCL Error Module *Last_VCL_Error_Module* 0x3473 0x00 **VCL Error** *Last_VCL_Error* 0x3472 0x00	0–65535 *0–65535* 0–65535 *0–65535*	A VCL Runtime Error (fault code 68) will store additional information about the cause of a VCL runtime error in the VCL Error Module and VCL Error variables. The resulting non-zero values can be compared to the runtime VCL module ID and error code definitions listed in the controller's OS SysInfo file, which should help pinpoint the VCL error that caused the runtime error.

Downloaded from www.Manualslib.com manuals search engine

Monitor Menu: CONTROLLER, cont'd

VARIABLE	DISPLAY RANGE	DESCRIPTION
SPM AutoChar Status *SPM_Auto_Char_State_Display* `0x3879 0x00`	0–65535 *0–65535*	Displays the real-time status of the SPM motor auto-characterization procedure. 0 = motor needs characterization 1 = characterization not started 2 = aligning rotor to field 3 = tuning current regulator 4 = sin/cos peak voltage detection 5 = determining phasing 6 = determining sin/cos compensation 7 = characterization complete 8 = characterization error.
Motor Characterization Error *Motor_Characterization_Error* `0x3899 0x00` Notes: Errors 1 and 8 apply to ACIM motors only. Errors 20, 21, and 23 apply to SPM motors only. Errors indicate the motor characterization data is invalid, except in the case of Error 1.	0–65535 *0–65535*	A Motor Characterization Fault (fault code 87) will store additional information in the Motor Characterization Error variable: 0 = sequencing error. Normally caused by turning off Motor Characterization Test Enable before running the test. 1 = encoder signal seen but step size not auto-detected; set up Encoder Steps manually 2 = motor temp sensor fault 3 = motor temp hot cutback fault 4 = controller overtemp cutback fault 5 = controller undertemp cutback fault 6 = undervoltage cutback fault 7 = severe overvoltage fault 8 = encoder signal not seen, or one or both channels missing 9 = motor parameters out of characterization range. 20 = sin/cos sensor not found 21 = phasing not detected 22 = sin/cos sensor characterization failure 23 = started characterization procedure while motor rotating.
Parameter Mismatch Error *Parameter_Mismatch_Error* `0x388F 0x00`	0–65535 *0–65535*	A Parameter Mismatch Fault Fault (fault code 99) will store additional information in the Parameter Mismatch Error variable: 0 = none 1 = Dual Motor Enable = On, and Control Mode Select is not set to either 0-Speed Mode Express or 1-Speed Mode 2 = Feedback Type is incompatible with Motor Technology setting.
Supervision Error *Supervision_Error* `0x3897 0x00`	0–65535 *0–65535*	A Supervision Fault (fault code 77) will store additional information in the Supervision Error variable: 0 = none 1 = watchdog timeout comms 2 = power supply fault detected 3 = queue fault detected 4 = ALU fault detected.

Downloaded from www.Manualslib.com manuals search engine

Monitor Menu: CUTBACKS		
VARIABLE	DISPLAY RANGE	DESCRIPTION
Motor Temp Cutback *MotorTempCutback* `0x3581 0x00`	0–100 % *0–4096*	Displays the current available as a result of the motor temperature cutback function. A value of 100% indicates no cutback in current.
Controller Temp Cutback *ControllerTempCutback* `0x35F3 0x00`	0–100 % *0–4096*	Displays the current available as a result of the controller temperature cutback function. A value of 100% indicates no cutback in current.
Undervoltage Cutback *UndervoltageCutback* `0x3605 0x00`	0–100 % *0–4096*	Displays the current available as a result of the undervoltage cutback function. A value of 100% indicates no cutback in current.
Overvoltage Cutback *OvervoltageCutback* `0x3604 0x00`	0–100 % *0–4096*	Displays the current available as a result of the overvoltage cutback function. A value of 100% indicates no cutback in current.

Monitor Menu: MOTOR TUNING		
VARIABLE	DISPLAY RANGE	DESCRIPTION
Motor RPM *Motor_RPM* `0x3207 0x00`	-32768–32767 rpm *-32768–32767*	Motor speed in revolutions per minute.
Base Speed Captured *Base_Speed_Captured* `0x35BE 0x00`	0–65535 rpm *0–65535*	Displays the value of the motor base speed captured in the most recent acceleration. This value is used to set the FW Base Speed parameter, using the FW Base Speed set procedure described on page 57 or using the ACIM motor characterization procedure (Section 6a).
Test Field Current *Test_Field_Current* `0x3873 0x00`	0–800 A *0–800*	Field test current reading to be used during the ACIM motor characterization procedure (Section 6a).
Following Error *Following_Error* `0x3555 0x00`	-12000–12000 rpm *-12000–12000*	Signal error between the commanded motor speed trajectory and the actual motor rpm.

Downloaded from www.Manualslib.com manuals search engine

☞ *Note: All vehicle calculations assume no tire slippage.*

Monitor Menu: VEHICLE

VARIABLE	DISPLAY RANGE	DESCRIPTION
Vehicle Speed *Vehicle_Speed* `0x320A 0x00`	-3276.8 – 3276.7 *-32768 – 32767*	Vehicle speed, in units of MPH or KPH, depending on the setting of the Metric Units parameter (see Program » Vehicle menu, page 67). For accurate speed estimates, the Speed to RPM parameter must be set correctly (page 67).
Vehicle Odometer *Vehicle_Odometer* `0x3200 0x00`	0.0 – 1000000.0 *0 – 10000000*	Vehicle distance traveled, in units of miles or km, depending on the setting of the Metric Units parameter (page 67). For accurate distance measurements, the Speed to RPM parameter must be set correctly (page 67).
Vehicle Acceleration *Vehicle_Acceleration* `0x35C1 0x00`	0.000–10.000 g *0–10000*	Vehicle acceleration. The Speed to RPM parameter must be set correctly for accurate measurement (page 67).
Time to Speed 1 *Time_to_Capture_Speed_1* `0x35BF 0x00`	0.00 – 128.00 s *0 – 32000*	Time taken for the vehicle to go from zero rpm to the programmed Capture Speed 1 (see Program » Vehicle menu, page 67) during its most recent such acceleration.
Time to Speed 2 *Time_to_Capture_Speed_2* `0x35BB 0x00`	0.00 – 128.00 s *0 – 32000*	Time taken for the vehicle to go from zero rpm to the programmed Capture Speed 2 (see Program » Vehicle menu, page 67) during its most recent such acceleration.
Time Between Speeds *Time_Between_Capture_ Speeds* `0x35C4 0x00`	0.00 – 128.00 s *0 – 32000*	Time taken for the vehicle to go from programmed Capture Speed 1 to programmed Capture Speed 2 (see Program » Vehicle menu, page 61) during its most recent such acceleration.
Time to Dist 1 *Time_to_Capture_Distance_1* `0x3612 0x00`	0.00 – 128.00 s *0 – 32000*	Time taken for the vehicle to travel from zero rpm to the programmed Capture Distance 1 (see Program » Vehicle menu, page 67) during its most recent such trip. For accurate distance measurements, the Speed to RPM parameter must be set correctly (page 67).
Time to Dist 2 *Time_to_Capture_Distance_2* `0x3613 0x00`	0.00 – 128.00 s *0 – 32000*	Time taken for the vehicle to travel from zero rpm to the programmed Capture Distance 2 (see Program » Vehicle menu) during its most recent such trip. For accurate distance measurements, the Speed to RPM parameter must be set correctly (page 67).

Downloaded from www.Manualslib.com manuals search engine

Monitor Menu: VEHICLE, cont'd		
VARIABLE	DISPLAY RANGE	DESCRIPTION
Time to Dist 3 *Time_to_Capture_Distance_3* `0x3614 0x00`	0.00–128.00 s *0–32000*	Time taken for the vehicle to travel from zero rpm to the programmed Capture Distance 3 (see Program » Vehicle menu, page 67) during its most recent such trip. For accurate distance measurements, the Speed to RPM parameter must be set correctly (page 67).
Braking Distance Captured *Braking_Distance_Captured* `0x3201 0x00`	0.0–1000000.0 *0–40000000*	Distance traveled by the vehicle starting with vehicle braking (initiated by throttle reversal, brake pot, VCL_Brake, or interlock braking) and ending when Motor_RPM = 0. Units are meters or feet, depending on the setting of the Metric Units parameter (page 67). For accurate distance measurements, the Speed to RPM parameter must be set correctly (page 67).
Distance Since Stop *Distance_Since_Stop* `0x324E 0x00`	0.0–1000000.0 *0–40000000*	Distance traveled by the vehicle starting from a stop. In effect, the vehicle is used as a tape measure. (In other words, if you travel 300 feet forward and then 300 feet in reverse, the distance would be 600.) The distance is continuously updated and will stop (and restart) when Motor_RPM = 0. For accurate distance measurements, the Speed to RPM parameter must be set correctly (page 67). Units are meters or feet, depending on the setting of the Metric Units parameter (page 67).
Distance Fine *Distance_Fine_Long* `0x3616 0x00`	-214748364.8–214748364.7 *-2147483648–2147483647*	Position measurement. Net distance in both the forward and reverse directions. (In other words, if you travel 20 inches forward and then 20 inches in reverse, the distance would be zero.) The distance is continuously updated and will roll over when the variable goes over the limits. Units are decimeters or inches, depending on the setting of the Metric Units parameter (page 67). For accurate distance measurements, the Speed to RPM parameter must be set correctly (page 67).

Downloaded from www.Manualslib.com manuals search engine

Monitor Menu: CAN STATUS		
VARIABLE	DISPLAY RANGE	DESCRIPTION
CAN Node ID *CAN_Node_ID* `0x3145 0x00`	0–127 *0–127*	Displays the controller's Node ID.
CAN NMT State *CAN_NMT_State* `0x3328 0x00`	0–127 *0–127*	Controller CAN NMT state: 0=initialization, 4=stopped, 5=operational, 127=pre-operational.
PDO1 MOSI Byte Map*	$0 – 2^{32}$	Mapping objects for PDO1 MOSI's eight bytes.
PDO1 MISO Byte Map*	$0 – 2^{32}$	Mapping objects for PDO1 MISO's eight bytes.
PDO2 MOSI Byte Map*	$0 – 2^{32}$	Mapping objects for PDO2 MOSI's eight bytes.
PDO2 MISO Byte Map*	$0 – 2^{32}$	Mapping objects for PDO2 MISO's eight bytes.

* Each of these byte maps is a submenu containing 8 variables, one for each byte. Each variable is 32 bits.

PDO1 MOSI Byte Map

CAN_PDO_MOSI_1_MAP_1	`0x1600 0x01`
CAN_PDO_MOSI_1_MAP_2	`0x1600 0x02`
CAN_PDO_MOSI_1_MAP_3	`0x1600 0x03`
CAN_PDO_MOSI_1_MAP_4	`0x1600 0x04`
CAN_PDO_MOSI_1_MAP_5	`0x1600 0x05`
CAN_PDO_MOSI_1_MAP_6	`0x1600 0x06`
CAN_PDO_MOSI_1_MAP_7	`0x1600 0x07`
CAN_PDO_MOSI_1_MAP_8	`0x1600 0x08`

PDO2 MOSI Byte Map

CAN_PDO_MOSI_2_MAP_1	`0x1601 0x01`
CAN_PDO_MOSI_2_MAP_2	`0x1601 0x02`
CAN_PDO_MOSI_2_MAP_3	`0x1601 0x03`
CAN_PDO_MOSI_2_MAP_4	`0x1601 0x04`
CAN_PDO_MOSI_2_MAP_5	`0x1601 0x05`
CAN_PDO_MOSI_2_MAP_6	`0x1601 0x06`
CAN_PDO_MOSI_2_MAP_7	`0x1601 0x07`
CAN_PDO_MOSI_2_MAP_8	`0x1601 0x08`

PDO1 MISO Byte Map

CAN_PDO_MISO_1_MAP_1	`0x1A00 0x01`
CAN_PDO_MISO_1_MAP_2	`0x1A00 0x02`
CAN_PDO_MISO_1_MAP_3	`0x1A00 0x03`
CAN_PDO_MISO_1_MAP_4	`0x1A00 0x04`
CAN_PDO_MISO_1_MAP_5	`0x1A00 0x05`
CAN_PDO_MISO_1_MAP_6	`0x1A00 0x06`
CAN_PDO_MISO_1_MAP_7	`0x1A00 0x07`
CAN_PDO_MISO_1_MAP_8	`0x1A00 0x08`

PDO1 MISO Byte Map

CAN_PDO_MISO_2_MAP_1	`0x1A01 0x01`
CAN_PDO_MISO_2_MAP_2	`0x1A01 0x02`
CAN_PDO_MISO_2_MAP_3	`0x1A01 0x03`
CAN_PDO_MISO_2_MAP_4	`0x1A01 0x04`
CAN_PDO_MISO_2_MAP_5	`0x1A01 0x05`
CAN_PDO_MISO_2_MAP_6	`0x1A01 0x06`
CAN_PDO_MISO_2_MAP_7	`0x1A01 0x07`
CAN_PDO_MISO_2_MAP_8	`0x1A01 0x08`

Downloaded from www.Manualslib.com manuals search engine

4b

CONTROLLER INFORMATION MENU

This menu provides ID and version numbers for your controller hardware and software.

CONTROLLER INFORMATION MENU

VARIABLE	DISPLAY RANGE	DESCRIPTION
Model Number *Model_Number* `0x3464 0x00`	0–4294967295 *0–4294967295*	Model number. For example, if you have a 1236E controller with the model number 1236E-4521, the Model Number variable will have a value of 12364521.
Serial Number *Serial_Number* `0x1018 0x04`	0–4294967295 *0–4294967295*	Serial number. For example, if the serial number printed on your controller is 15045L.11493, the Serial Number variable will have the value of 11493.
Mfg Date Code *Manuf_Date* `0x3466 0x00`	0–32767 *0–32767*	Controller date of manufacture, with the first two digits indicating the year and the last three indicating the day. For example, if the serial number printed on your controller is 15045L.11493, the Mfg Date Code variable will have the value of 15045 (45th day of 2015).
Hardware Version *Hardware_Ver* `0x3467 0x00`	0–32.767 *0–32767*	The hardware version number uniquely describes the combination of power base assembly and the logic, cap, and IMS board assemblies used in the controller.
OS Version *OS_Ver* `0x346A 0x00`	0–65535 *0–65535*	Version number of the operating system software that is loaded into the controller. This variable specifies the major version number of the controller's operating system.
Build Number *Build_Number* `0x346B 0x00`	0–65535 *0–65535*	Build number of the operating system software that is loaded into the controller. This variable specifies the minor version number of the controller's operating system.
SM Version *SM_Ver* `0x332B 0x00`	0–327.67 *0–32767*	Version number of the Start Manager software that is loaded into the controller.
Param Blk Version *Param_Blk_Ver* `0x3468 0x00`	0–327.67 *0–32767*	Version number of the parameter block that is loaded into the controller.
VCL App Version *VCL_App_Ver* `0x3463 0x00`	0–327.67 *0–32767*	Version number of the VCL application software that is loaded into the controller. This value is set in the VCL program by assigning a value to the VCL_App_Ver variable.
Vehicle Serial Number *Vehicle_Serial_Number* `0x393D 0x00`	0–4294967295 *0–4294967295*	Provided for OEM use and definition.

Downloaded from www.Manualslib.com manuals search engine

5 INITIAL SETUP

The 1232E/SE, 1234E/SE, 1236E/SE, and 1238E controllers can be used in a variety of vehicles, which differ widely in characteristics. Before driving the vehicle, it is imperative that these initial setup procedures be carefully followed to ensure that the controller is set up to be compatible with your application.

*** * * BEFORE YOU START * * ***

Correct values for the motor parameters (Motor Type, FW Base Speed, and Field Weakening) **must be determined individually for each motor.**

For ACIM motors, use one of these three options to obtain ACIM motor data:

- ➡ Contact your Curtis distributor or support engineer with the manufacturer's part number for your motor. Curtis has a database of many motors for which the motor data has already been determined.
- ➡ Send your ACIM motor to Curtis for testing on the factory motor dyno. Your motor's data will be entered into the Curtis database and we will send you software with the appropriate parameter values set to match your motor. Contact your Curtis distributor or support engineer before shipping your motor.
- ➡ Use the ACIM Motor Characterization Procedure (Section 6a), which has the controller "learn" the motor parameter data. The procedure should take about half an hour and can be done on the vehicle. Go ahead and complete setup steps ① through ⑪ of the Initial Setup before conducting the ACIM characterization procedure.

For SPM motors, use the SPM Motor Characterization Procedure (Section 6b), which has the controller "learn" the motor parameter data. The procedure should take about half an hour and can be done on the vehicle. Go ahead and complete setup steps ① through ⑪ of the Initial Setup before conducting the SPM characterization procedure. Using the SPM Motor Characterization Procedure is the only option for obtaining motor data for SPM motors.

If Curtis has given you the values for Motor Type, FW Base Speed, and Field Weakening and you have set them on your controller (see Motor Control Tuning menus, pages 57–58), you can start conducting the setup procedures. If you will be using the automated Motor Characterization Procedure, that will come later—after you have completed steps ① through ⑪.

For SPM applications, start the setup procedures now.

Downloaded from www.Manualslib.com manuals search engine

CAUTION

Before beginning the setup procedures, **jack the vehicle drive wheels up off the ground** so that they spin freely. Double-check all wiring to ensure it is consistent with the wiring guidelines presented in Section 2. Make sure all connections are tight. Turn on the controller and plug in the 1313 handheld or 1314 PC programmer.

① Motor temperature sensor *(see page 63)*

Set the Sensor Type parameter to the predefined type (1–5) that corresponds to your motor temperature sensor. Typically, the motor temperature sensor will be a thermistor that should be connected from Analog 2 (pin 8) to ground (pin 7) as shown on page 12.

To check whether the parameter settings and the motor thermistor connections yield the correct motor temperature, read the Temperature value displayed in the programmer's Monitor » Motor menu (page 79). This is typically done when the motor has not been run for many hours, to ensure the motor is at a known (room) temperature. If the programmer does not display the correct motor temperature, contact your Curtis distributor or support engineer for help. If the correct motor temperature is not displayed, or if there is no motor temperature sensor, this setup procedure can continue only if the Sensor Enable is set to Off.

If the programmer displays the correct motor temperature, continue with the procedure and set up the Sensor Enable, Temperature Hot, and Temperature Max parameters.

② Current limits *(see page 41)*

The Drive, Regen, Brake, EMR, and Interlock Current Limit parameters are a percentage of the controller's full rated current. The controller's full rated current is printed on the label of the controller. Set the five current limit parameters to your desired values.

③ Battery *(see page 64)*

Set the Nominal Voltage parameter to match the nominal battery pack voltage of your system.

④ Main contactor *(see pages 50–51)*

Set up the parameters in the Drivers » Main Contactor Menu.

⑤ EM brake *(see pages 48–49)*

Set up the parameters in the EM Brake Control Menu.

⑥ Throttle *(see pages 13–17 and 44–46)*

Before the throttle can be set up the interlock must be verified as Off, by reading the Interlock value displayed in the Monitor » Inputs menu (page 74). If the programmer indicates the interlock is On, review how you set the Interlock

Downloaded from www.Manualslib.com manuals search engine

Type parameter (Drivers » Main Contactor Menu) and turn the interlock off. Verify that the programmer displays that the interlock is now Off. Contact your Curtis distributor or support engineer to resolve any issues about the interlock before continuing with the setup procedure.

Once you have verified the interlock is off, you can set up the throttle input. The Throttle Type parameter must be set to match the type of throttle (1–5) and wiring that you are using, as described on pages 13–17. Adjust the Forward Deadband, Forward Max, Reverse Deadband and Reverse Max parameters to match the range of your throttle. The Throttle Pot value displayed on the Monitor » Inputs menu (page 74) is useful when setting up these parameters. For the forward and reverse directions, read the displayed throttle pot voltage at the point when the throttle moves out of neutral and at the point just before full throttle and enter these values for the deadband and max settings for that direction. Set up the other parameters in the Throttle Menu as required by the application.

You will be able to verify that your throttle settings are correct by checking the Mapped Throttle value displayed in the Monitor » Inputs menu (page 74) over the entire range of throttle pot movement. The value displayed for Mapped Throttle should be = 0% through the range of throttle motion that is considered neutral. The displayed Mapped Throttle should be = 100% through the range of motion that is considered forward throttle max and should be = -100% through the range considered reverse throttle max. Contact your Curtis distributor or support engineer to resolve any issues about the throttle setup before continuing with the setup procedure.

⑦ **Brake** *(see page 47)*

If the brake function is not used by your application, set the Brake Pedal Enable parameter = Off and Brake Type = 5.

Before the brake can be set up the interlock must be verified as Off, by reading the Interlock value displayed in the Monitor » Inputs menu (page 74). If the programmer indicates the interlock is On, review how you set the Interlock Type parameter (Drivers » Main Contactor Menu) and turn the interlock off. Verify that the Monitor Menu displays that the interlock is now Off. Contact your Curtis customer support engineer to resolve any issues about the interlock before continuing with the setup procedure.

Once you have verified that the interlock is off, you can set up the brake input. The Brake Type parameter must be set to match the type of brake throttle (1, 2, 3, 5) and wiring that you are using, as described on pages 13–17. Adjust the Brake Deadband and Brake Max parameters to match the range of your brake pot. The Brake Pot value (Pot2 Raw) displayed in the Monitor » Inputs menu (page 74) is useful when setting up these parameters. Read the displayed brake pot voltage at the point when the brake moves out of neutral and at the point just before full brake and enter in these values for the deadband and max settings. Set up the other parameters in the Brake Menu as required by the application.

You will be able to verify that your brake settings are correct by checking the Mapped Brake value displayed in the Monitor » Inputs menu (page 74)

Downloaded from www.Manualslib.com manuals search engine

over the entire range of brake pot movement. The value displayed for Mapped Brake should be = 0% through the range of brake pot motion that is considered neutral. The displayed Mapped Brake should be = 100% through the range of motion that is considered max. Contact your Curtis distributor or support engineer to resolve any issues about the brake setup before continuing with the setup procedure.

⑧ Motor Technology & Feedback Type *(see pages 55 and 61)*

Set the Motor Technology parameter to match the motor used in your application (0 = ACIM, 1 = SPM).
Set the Motor Feedback Type parameter based on the Motor Technology setting:

Feedback Type = 1 (quadrature position encoder) for ACIM,
Feedback Type = 2 (sin/cos sensor) for SPM.

Make sure that the Feedback Type matches the feedback device used on the motor, and that you are using the right type of device for your motor. If there is not a match, stop the setup procedure until a compatible motor and feedback device are obtained and installed.

If your application uses an ACIM motor (which must use a quadrature encoder), program the Encoder Steps parameter to the correct setting. This information is typically available from the motor manufacturer. If the ACIM Characterization Procedure is used (Section 6a), it can determine the encoder steps, but only for encoders with 32, 48, 64, or 80 ppr. **Setting the Encoder Steps parameter improperly may cause vehicle malfunction, including uncommanded drive.**

CAUTION

If your application uses an SPM motor (which must use a sin/cos sensor), the sin/cos min and max voltages will be learned during the SPM Characterization Procedure (Section 6b).

⑨ Faults *(see Section 9)*

Cycle KSI (to clear any parameter change faults) and use the programmer to check for faults in the controller. All faults and errors (including those in the History file) must be cleared before continuing with the setup procedure. Use Section 9 for help in troubleshooting. Contact your Curtis customer support engineer to resolve any fault issues before continuing with the setup procedure.

⑩ Setting feedback direction *(see page 61)*

With the vehicle drive wheels still jacked up, no faults present in the controller, the interlock Off (as verified in the Monitor » Inputs menu, page 74), and both the throttle and brake in neutral (Mapped Throttle = 0% and Mapped Brake = 0% in the Monitor » Inputs menu), the encoder direction can be checked. Use the Monitor » Motor menu (page 79) to view the Motor RPM display. Turn the motor by hand and observe the sign of Motor RPM. Positive is forward and negative is reverse. If you get a positive Motor RPM when you rotate the motor in the forward direction, and a negative Motor RPM when you rotate the motor in the reverse direction, the Swap Feedback Direction parameter is correct and should not be changed. If you are getting negative Motor RPM

Downloaded from www.Manualslib.com manuals search engine

when rotating the motor forward, the Swap Feedback Direction parameter must be changed. Cycle KSI power and repeat the procedure until you are satisfied that the Swap Feedback Direction setting is correctly set. If the vehicle will use the emergency reverse feature, the reverse direction (negative Motor RPM) must be correctly selected so that when the Emergency reverse input is active the motor will rotate in the reverse direction. Contact your Curtis distributor or support engineer to resolve any issues about encoder direction or emergency reverse before continuing with the setup procedure.

⑪ Checking direction of rotation

Now that you have the encoder direction set correctly, you can test to see whether the motor rotation is correct. Cycle KSI off and on (to clear any parameter change faults) and use the programmer to check for faults in the controller. All faults must be cleared before continuing with the setup procedure. Apply the interlock input and verify that Interlock = On (as verified in the Monitor » Inputs menu). Then, while keeping the brake in neutral, select a direction and apply throttle. The motor should begin to turn.

For an ACIM motor, observe the motor rotation and if the motor appears to be "fighting itself" (struggling at full current while jerkily turning at very low speed), change the setting of the Swap Two Phases parameter.

For an SPM motor, observe the motor rotation and if it is turning in the wrong direction repeat Step ⑩ or contact your Curtis distributor or support engineer.

CAUTION

Do not take the vehicle down off the blocks until the motor is responding properly.

Once the motor is responding properly, lower the vehicle to put the drive wheels on the ground.

Note: Do not take the vehicle down off the blocks if you will be running the Motor Characterization procedure.

⑫ Motor characterization

If your motor is an ACIM motor, you must either:

(a) Already have software with the motor data programmed to match your motor. The pre-set motor data software is usually the result of contacting your Curtis distributor or support engineer and getting a match between your motor and the Curtis ACIM motor database, or by shipping a motor to Curtis for dyno characterization (see page 87).

or (b) Use the in-vehicle ACIM Motor Characterization Procedure (Section 6a) now. This procedure will set the direction, may set the Encoder Steps, learn ACIM motor data, and set the FW Base Speed and Field Weakening Drive.

If your motor is an SPM motor, you must use the in-vehicle SPM Motor Characterization Procedure (Section 6b) now. This procedure will set the direction and the Sin/Cos sensor parameters, and learn the SPM motor data parameters.

After ensuring that the controller has the motor data values that match your controller, complete steps ⑬ through ⑭ of the initial setup.

Downloaded from www.Manualslib.com manuals search engine

⑬ **Emergency reverse** *(see page 68)*

Set up the parameters in the Emergency Reverse Menu. Note: Emergency Reverse is active only if you are using Speed Mode Express or Speed Mode as your motor tuning mode.

⑭ **Interlock braking** *(see page 69)*

Set up the parameters in the Interlock Braking Menu.

Downloaded from www.Manualslib.com manuals search engine

6a

AUTOMATED ACIM MOTOR CHARACTERIZATION PROCEDURE

Warning: Motor will rotate during this procedure.

This procedure is only for applications using an ACIM motor and quadrature encoder.

The test procedure is performed in two parts. Both parts must be completed for proper controller setup. The first part applies to all systems, and the second part is different for traction systems and hydraulic systems. It is assumed that Initial Setup steps ① through ⑪ have been completed.

The procedure assumes the motor is approximately room temperature (30°C); do not characterize a hot motor without a temperature sensor.

If characterizing a **traction system**, the vehicle should have its drive wheels clearly off ground, and the vehicle should be safely blocked from accidental movement. The drive wheels should be freely spinning—any dragging brake or excessive friction may invalidate this test, or cause it to fail.

If characterizing a **hydraulic system**, the motor must be unbolted from the hydraulic pump and allowed to spin freely. The test will not work properly if the motor is left connected to the pump. Note: The motor may spin to high speed in either direction.

Hint: The procedure is easier to conduct if you add the various motor characteristics Program parameters and Monitor variables to your 1313's Favorites folder.

PART 1: Traction and Hydraulic Systems

1. Verify that Motor Technology = 0-ACIM and Feedback Type = 1-encoder. This configuration, and these settings, are required to run this procedure.

   Motor » Control Algorithms » 0-ACIM

   Motor » Feedback Options » Feedback Type » 1-Encoder

2. Enter the number of motor poles in the Motor Poles parameter. The vast majority of induction motors will have 4 poles.

   Motor » Control Algorithms » 0-ACIM » Characterization Tests » Motor Poles

3. Enter the desired Max Test Speed for the characterization test. Note this speed might not be achieved, depending on system characteristics; this is normal. A typical setting is approximately 1/3 of the maximum motor speed in the application.

   Motor » Control Algorithms » 0-ACIM » Characterization Tests » Max Test Speed

4. Enter the desired Max Test Current for the characterization test. A typical setting is 70% (70% of the maximum motor or controller rating, whichever is higher). Generally this is only reduced if motor heating during the test is a problem, or resonance in the motor occurs at high currents.

   Motor » Control Algorithms » 0-ACIM » Characterization Tests » Max Test Current.

5. Using the 1313, clear the Fault History (Faults » Clear Fault History).

Downloaded from www.Manualslib.com manuals search engine

6. Ensure that Interlock is enabled (Monitor » Inputs » Interlock).
7. Set **Test Enable** = 1.

   Motor » Control Algorithms » 0-ACIM » Characterization Tests » Test Enable
8. If any faults are present, stop and resolve the issue before continuing.

CAUTION

WARNING – Motor will start to rotate after next step.

9. Note that no cutbacks should be in effect (thermal, voltage, etc.) when these tests are run. Also, the power limiting maps should not cut back current over the characterization speed range. Check and verify that the power limiting map parameters are set to 100% over the characterization speed range.

   Current Limits » Power Limiting Map (page 42)
10. Set **Test Throttle** = +1.

    Motor » Control Algorithms » 0-ACIM » Characterization Tests » Test Throttle
11. After approximately 30 seconds (during which the motor may "tick" as the current regulator gains are tuned), the motor will begin to rotate. **It is critical to verify the motor is turning in the FORWARD vehicle direction.** If it is not, set Test Throttle = 0, **wait** for the motor to come to a stop, then set Test Throttle = –1.
12. The automated test may take several minutes. When it is complete, the controller will have a Parameter Change Fault. This is normal. Check whether other faults are present. If you have a Characterization Error fault, read the number at Monitor » Controller » Motor Characterization Error and reference the following table. All errors except "1" indicate the motor characterization data is invalid. For error "1," the data is valid but Encoder Steps must be set manually. Contact your Curtis distributor or support engineer if the Motor Characterization Errors indicated cannot be resolved.

Motor Characterization Errors

0	Sequencing error. Normally caused by turning off Motor Characterization Test Enable before running test.
1	Encoder signal seen but step size could not be auto-detected; set up **Encoder Steps** manually. (Only steps of 32, 48, 64, and 80 will be identified automatically.) *Program » Motor » Encoder Steps (page 61)*
2	Motor temperature sensor fault
3	Motor overtemperature >150°C (active only when temp sensor is present)
4	Controller overtemperature
5	Controller undertemperature
6	Battery undervoltage
7	Battery severe overvoltage
8	Encoder signal not seen, or one or both channels missing
9	Motor parameter out of characterization range; check to be sure motor has no load
23	Started motor characterization while motor rotating.

Downloaded from www.Manualslib.com manuals search engine

13. Cycle KSI power.
    The motor control should now be operational, though likely poorly optimized. The Slip Gain test is very important for most, but not all, motors; you won't know which until you perform the test and get the result. The following steps will complete the optimization process.

PART 2a: Traction Systems only

14. Now adjust the **SlipGain** parameter to provide maximum torque at stall (0 rpm motor speed). Note: The present SlipGain value was determined by the auto-characterization procedure, and is not the default value.

    Motor » Control Algorithms » 0-ACIM » Characterization Tests » SlipGain

    This can be accomplished in various ways, but the following two methods are preferred, with (a) being the most accurate:

    (a) Configure the vehicle to measure stall torque, by using a load cell / draw bar test. Note: You will want to perform this test quickly to avoid excessive motor heating and provide the most accurate results.

    Turn off encoder fault detection (Motor » Encoder Fault Setup » Fault Detection Enable).

    While applying and holding full throttle, adjust SlipGain until you measure peak torque.

    If you want to have encoder fault detection active, turn it back on.

    (b) Set the Accel Rates to very fast values. (In Speed Mode Express: Accel Rate. In Speed Mode: Full Accel LS, Full Accel HS, Low Accel. In Torque Mode: Accel Rate.)

    On the 1313 programmer, add these two items to the Favorites shortcut, so you can easily toggle between them:

    Monitor » Vehicle » Time to Dist 1
    Program » Motor Control Tuning » IM Motor Characterization Tests » SlipGain.

    Set Capture Speed 1 (Program » Vehicle » Capture Speed 1, page 67) to a value close to the Max Speed setting. The Time to Dist 1 timer monitors how long it takes the motor to get to this predetermined speed. The timer starts counting when full throttle is applied and stops counting when Capture Speed 1 is reached.

    This test should be run repeatedly over the same stretch of flat or uphill ground. Adjust the SlipGain value until the Time to Dist 1 value is minimized. Loading the vehicle will improve results. Repeat with Capture Speed 2 and Time to Dist 2.

Downloaded from www.Manualslib.com manuals search engine

15. Run the FW Base Speed test.

    Set the **FW Base Speed** to 6000 rpm. The test should be run with batteries that have a reasonable charge.

    Motor » Control Algorithms » 0-ACIM » Field Weakening Control » FW Base Speed

    Set the Accel Rates to be very fast, so that you'll be accelerating at full current during the test. From a stop, quickly apply full throttle to accelerate to a high speed. After the motor settles at a speed for a moment, release the throttle to stop. Note the value of the Base Speed Captured (Monitor » Controller » Motor Tuning » Base Speed Captured), and enter this value for the FW Base Speed setting.

    ☞ The test restarts each time the vehicle comes to a stop and the throttle is released, so be sure to note the value before driving away.

16. Decide between more efficient or more torque operation at high speeds, by adjusting **Field Weakening Drive**. Note: The present Field Weakening Drive value (0%) was determined by the auto-characterization procedure, and is not the default value (50%).

    Motor » Control Algorithms » 0-ACIM » Field Weakening Control » Field Weakening Drive

    Increasing the parameter toward 100% will progressively allow more torque (along with more current) at high motor speeds, but increasing it too much will actually reduce torque while still driving a great deal of current. The auto-characterization value of 0% will give the most efficient motor operation, but will not give the highest torque at high speeds.

    If more torque is required at high speeds, you will need to run the Field Weakening Drive test.

    On the 1313 programmer, add these two items to the Favorites shortcut, along with Field Weakening Drive, so you can easily toggle between them:

    Monitor » Vehicle » Time Between Speeds (page 83)
    Program » Vehicle » Capture Speed 1, 2 (page 67).

    Set **Capture Speed 1** and **2** to values that are close to the Max Speed setting. Ideally the Capture Speed 1, 2 values should be above the second corner point of the motor torque – speed curve. For example, if the Max Speed is set to 4000 rpm, set Capture Speed = 3500 rpm and Capture Speed 2 = 3800 rpm:

    Program » Speed Mode Express » Max Speed (page 30)
    Program » Speed Mode » Speed Controller » Max Speed (page 31)
    Program » Torque Mode » Speed Limiter » Max Speed (page 37)

    From a stop, apply full throttle to accelerate to a speed greater than Capture Speed 2. Note the value displayed in Monitor » Vehicle » Time Between Speeds.

    Now increase the Field Weakening Drive setting and repeat the acceleration in the same direction, with the same load, and with the same full throttle and again note the Time Between Speeds value.

Downloaded from www.Manualslib.com manuals search engine

Keep adjusting the Field Weakening Drive value and repeating the test until you find the Field Weakening Drive value that results in the smallest Time Between Speeds. This Field Weakening Drive value should be used for applications that require the most torque at high speeds.

Some Field Weakening Drive settings may result in a test acceleration run where Capture Speed 2 cannot be obtained. These Field Weakening Drive settings cannot provide enough torque to get the vehicle past Capture Speed 2. The final setting used for Field Weakening Drive should be somewhere between 0% (most efficient, least motor heating) and the setting found in this test (highest torque at high speeds).

Note: The Field Weakening Drive setting will have no effect at motor speeds below FW Base Speed.

17. Return to Section 5 and complete Initial Setup steps ⑬ through ⑭.

Downloaded from www.Manualslib.com manuals search engine

PART 2b: Hydraulic Systems only

13. Now adjust the **SlipGain** parameter to provide maximum torque at low speeds. Note: The present SlipGain value was determined by the auto-characterization procedure, and is not the default value.

    Motor » Control Algorithms » 0-ACIM » Characterization Tests » SlipGain

    Set Max Speed to a fairly low speed (but high enough to be able to lift a load on the forks), typically 800 rpm. The Max Speed setting must be below the motor base speed, which is measured in the next step.

    Put a very heavy load on the forks, preferable a max load.

    Apply full throttle, and vary the SlipGain until the motor current is minimized (Monitor » Controller » Current (RMS)). If the vehicle has a multistage mast, work in the first stage only so that the load is consistent.

14. Run the FW Base Speed test.

    Set Max Speed to the maximum desired pump speed.

    Set **FW Base Speed** = 6000 rpm. The test should be run with batteries that have a reasonable charge.

    Motor » Control Algorithms » 0-ACIM » Field Weakening Control » FW Base Speed

    Set the Accel Rates to be very fast, so that you'll be accelerating at full current during the test.

    Because the pump can accelerate past FW Base Speed quickly, it is necessary to pre-flux the motor current prior to running this test to get an accurate measure of base speed. To pre-flux the motor, note the displayed Test Current value (Monitor » Controller » Motor Tuning » Test Field Current) and enter this value for **Min Field Current**.

    Motor » Control Algorithms » 0-ACIM » Field Weakening Control » Min Field Current

    CAUTION **The controller is now running current with no throttle, so continue this test without delay to prevent motor and controller heating.**

    From a stop, quickly apply full throttle to accelerate to a high speed. After the motor settles at a speed for a moment, release the throttle to stop. Note the value of the Base Speed Captured (Monitor » Controller » Motor Tuning » Base Speed Captured), and enter this value for the FW Base Speed setting.

    The test restarts each time the vehicle comes to a stop and the throttle is released, so be sure to note the value before reapplying the throttle.

    CAUTION **When finished, be sure to set the Min Field Current = 0 to cancel the pre-flux current.**

Downloaded from www.Manualslib.com manuals search engine

15. Run the Field Weakening test.

    Run the Field Weakening Drive test.

    Note: The present **Field Weakening Drive** value (0%) was determined by the auto-characterization procedure, and is not the default value (50%).

    Motor » Control Algorithms » 0-ACIM » Field Weakening Control » Field Weakening Drive

    Increasing the parameter toward 100% will progressively allow more torque (along with more current) at high motor speeds, but increasing it too much will actually reduce performance while still driving a great deal of current. While the most efficient operation will occur with field weakening at the 0% auto-characterization value, more torque at high speeds may be required, necessitating more field weakening.

    On the 1313 programmer, add these two items to the Favorites shortcut so you can easily toggle between them:

    Monitor » Controller » Motor Tuning » Motor RPM (page 82)
    Program » Motor » Control Algorithms » 0-ACIM » Field Weakening Control » Field Weakening Drive.

    Set Max Speed to a very high speed that likely cannot be achieved by the hydraulic system.

    Set Field Weakening Drive = 100%.

    Apply full throttle, and again work with just the first stage if you have a multistage mast. On each run, continue to lower the Field Weakening Drive value and note the maximum speed (Monitor » Controller » Motor Tuning » Motor RPM) the motor is able to achieve. Repeat and continue lowering the Field Weakening Drive value until you notice the achievable maximum motor speed fall off significantly (20–30 rpm). This setting is the Field Weakening Drive value you should set to achieve the maximum torque / speed envelope of the motor. You can always reduce the Field Weakening Drive value to improve energy consumption and efficiency (but reducing torque output) at high speeds.

    Note: The Field Weakening Drive setting will have no effect at motor speeds below FW Base Speed.

16. Return to Section 5 and complete Initial Setup steps ⑬ through ⑭.

Downloaded from www.Manualslib.com manuals search engine

6b

AUTOMATED SPM MOTOR CHARACTERIZATION PROCEDURE

Warning: Motor will rotate during this procedure.

This procedure is only for applications using an SPM motor and sin/cos sensor.

This procedure is performed in one stage and takes approximately 5–10 minutes. It can only be used on a sinusoidal wound SPM motor with sin/cos absolute position sensor (e.g, RLS RM22, SKF BX-BMB-7050, etc.) set up with one sensor revolution per mechanical revolution.

It is assumed that Initial Setup steps ① through ⑪ have been completed and that the motor is approximately room temperature (30°C); do not characterize a hot motor without a temperature sensor.

If characterizing a **traction system**, the vehicle should have its drive wheels clearly off ground, and the vehicle should be safely blocked from accidental movement. The drive wheels should be freely spinning—any dragging brake or excessive friction may invalidate this test, or cause it to fail.

If characterizing a **hydraulic system**, the motor must be unbolted from the hydraulic pump and allowed to spin freely. The test will not work properly if the motor is left connected to the pump. Note: The motor will spin to Max Test Speed in both directions.

1. Verify that Motor Technology = 1-SPM and Feedback Type = 2-sin/cos sensor. This configuration, and these settings, are required to run this procedure.

   Motor » Control Algorithms » 1-SPM
   Motor » Feedback Options » Feedback Type » 2-Sin/Cos

2. Enter the maximum speed the motor is intended to turn as the Max Test Speed for the characterization test. Note this speed might not be achieved, depending on system characteristics; this is normal. A typical setting is 5000 rpm, but clearly the Max Test Speed should not be set to a higher speed than safe for the mechanical configuration.

   Motor » Control Algorithms » 1-SPM » Characterization Tests » Max Test Speed

3. Enter the desired Max Test Current for the characterization test. A typical setting is 20% (note this is 20% of the maximum controller rating). Generally this is only reduced if motor heating during the test is a problem. Generally this is only increased if the motor fails to rotate during commissioning.

   Motor » Control Algorithms » 1-SPM » Characterization Tests » Max Test Current

4. Using the 1313, clear Fault History (Faults » Clear Fault History).
5. Ensure that Interlock is enabled (Monitor » Inputs » Interlock).
6. Set **Test Enable** = 1.

   Motor » Control Algorithms » 1-SPM » Characterization Tests » Test Enable

Downloaded from www.Manualslib.com manuals search engine

7. If any faults are present, stop and resolve the issue before continuing.

CAUTION **WARNING – Motor will start to rotate after next step.**

8. Set **Test Throttle** = +1.

   Motor » Control Algorithms » 1-SPM » Characterization Tests » Test Throttle.

9. The controller will start to inject test pulses. **After a few minutes** (when pulsing stops), the motor will begin to rotate very slowly. **It is critical to verify the motor is turning in the FORWARD vehicle direction.** If it is not, set Test Throttle = 0, **wait** for the motor to come to a stop, then set Test Throttle = –1. The motor will start again in the same direction. The controller will properly set the direction at the end of characterization process. (Note: This is a different operation than that in the ACIM characterization procedure, which does turn the motor in the other direction when Test Throttle is set negative.)

10. After about a minute, the motor will spin up to a moderate speed, then to high speed (limited by Max Test Speed) in each direction.

11. When the automated test is complete, the controller will have a Parameter Change Fault. This is normal. Check whether other faults are present. If you have a Characterization Error fault, read the number at Monitor » Controller » Motor Characterization Error and reference the following table. An error during the SPM test indicates the motor characterization data is invalid; contact your Curtis distributor or support engineer.

Motor Characterization Errors

0	Sequencing error. Normally caused by turning off Motor Characterization Test Enable before running test.
2	Motor temperature sensor fault
3	Motor overtemperature >150°C (active only when temp sensor is present)
4	Controller overtemperature
5	Controller undertemperature
6	Battery undervoltage
7	Battery severe overvoltage
9	Motor parameter out of characterization range; check to be sure motor has no load
20	Sin/cos sensor not found
21	Phasing not detected
22	Sin/cos sensor characterization failure
23	Started motor characterization while motor rotating.

12. Cycle KSI power.

13. Return to Section 5 and complete Initial Setup steps ⑬ through ⑭.

Downloaded from www.Manualslib.com manuals search engine

7 TUNING GUIDE

Many aspects of vehicle performance can be optimized, using the wide variety of adjustable parameters available to these E and SE controllers. Once a vehicle/motor/controller combination has been tuned, the parameter values can be made standard for the system or vehicle model. Any changes in the motor, the vehicle drive system, or the controller will require that the system be tuned again to provide optimum performance.

Selecting the control mode *(see page 29)*

Before starting to tune your vehicle's performance, you must select which control mode you use. Set the Control Mode Select parameter = 0 (Speed Mode Express for either traction or pump motors), = 1 (Speed Mode, for either traction or pump motors) or = 2 (Torque Mode, for traction motors). Cycle KSI input Off and then On (to clear any parameter change faults) and use the 1313 handheld or 1314 PC programmer to check for faults in the controller. Then proceed to the tuning steps for the control mode you have selected.

Conduct the steps in the sequence given, because successive steps build upon the ones before. It is important that the effect of these programmable parameters be understood in order to take full advantage of the controller's powerful features. Please refer to the descriptions of the applicable parameters in Section 3 if there is any question about what any of them do.

0 - SPEED MODE EXPRESS tuning *(see page 30)*

Speed Mode Express is the same as Speed Mode with the exception that it has fewer parameters and is therefore simpler to use. Most vehicle applications will find success with Speed Mode Express; however, for some applications vehicle performance cannot be satisfactorily fine-tuned in Speed Mode Express. In this case, change your control mode to Speed Mode (i.e., set Control Mode Select =1).

a. For traction applications, set Pump Enable to Off. For AC pump applications, set this parameter On.

b. Adjust Max Speed to the maximum speed the motor should turn in the vehicle application; this speed setting corresponds to an input of full throttle.

c. Adjust Typical Max Speed (page 55) to the approximate maximum speed that the motor will spin. This is usually the same value as the setting for Max Speed, but some applications have a Max_Speed_SpdMx that changes (in the VCL software). If the Max_Speed_SpdMx changes, set Typical Max Speed to the highest speed the motor is expected to reach. This value does not need to be set precisely since it will not change motor performance. Typical Max Speed sets a reference point for the "rate" parameters (accel, decel, brake rates), so that applications that have a changing Max_Speed_SpdMx will not experience changes in the rates (because the rates are referenced to the unchanging Typical Max Speed value). Once you set the Typical Max

Downloaded from www.Manualslib.com manuals search engine

Speed parameter you should not readjust it without adjusting all the rate parameters as well.

d. Kp and Ki typically do not need to be changed as the default values will work well in most applications. If you want to adjust Kp (for looser or tighter following of the speed trajectory set by the accel, decel, and brake rates), follow the procedure in step "d" in the Speed Mode tuning section.

e. Adjust the Accel Rate and Decel Rate as necessary while moving the throttle to different positions (i.e., neutral to full throttle, half throttle to full throttle, full throttle to half throttle, full throttle to neutral, neutral to low throttle, etc.). For AC pump applications, typically the Accel Rate and Decel Rate are set very fast for quick response to hydraulic inputs.

f. Adjust the Brake Rate as necessary while reversing the throttle input (i.e., full throttle forward to low throttle reverse, full throttle forward to full throttle reverse, full throttle reverse to low throttle forward, etc.). If a brake input is present in the application (Brake Pedal Enable = On) continue adjusting Brake Rate by applying different amounts of brake throttle (i.e., full throttle forward, then apply full brake or full throttle forward, then apply low brake, etc.). For AC pump applications the Brake Rate has no effect on performance since the AC pump will not run in reverse nor with a brake input.

☞ *AC pump motor applications*, which in step "a" had the Pump Enable parameter set to On, may also be controlling hydraulic valves (load hold valve, proportional valve). The Proportional Driver parameters (page 52) and some VCL will typically be used to set up the control of these valve driver outputs. Consult with your Curtis distributor or support engineer regarding hydraulic valve control.

1 - SPEED MODE tuning *(see pages 31–36)*

a. For traction applications, set Pump Enable to Off. For AC pump applications set this parameter On.

b. Adjust Max Speed to the maximum speed the motor should turn in the vehicle application; this speed setting corresponds to an input of full throttle.

c. Adjust the Typical Max Speed (page 55) to the approximate maximum speed that the motor will spin. This is usually the same value as the setting for Max Speed, but some applications have a Max_Speed_SpdM that changes (in the VCL software). If the Max_Speed_SpdM changes, set the Typical Max Speed to the highest speed the motor is expected to reach. This value does not need to be set precisely since it will not change motor performance. Typical Max Speed sets a reference point for the "rate" parameters (accel, decel, brake rates), so that applications that have a changing Max_Speed_SpdM will not experience changes in the rates (because the rates are referenced to the unchanging Typical Max Speed value). Once you set the Typical Max Speed parameter you should not readjust it without adjusting all the rate parameters as well.

Downloaded from www.Manualslib.com manuals search engine

d. Kp typically does not need to be changed as the default value will work well in most applications. This parameter controls how tightly the actual motor speed will track the requested speed trajectory (speed trajectory is set by the accel, decel, and brake rates).

If you want to adjust the Kp (for looser or tighter following of the speed trajectory), follow these guidelines.

- Set the following parameters. Before setting them, make a note of their present (default) settings so you can return them to these original values at the end of this procedure.
  - *If your vehicle has an EM Brake:* In the EM Brake Control menu (page 48), set the Brake Type to 1. This setting will release the EM Brake as soon as interlock is asserted.
  - In the Speed Mode » Response menu, set all the accel and decel rates to their fastest values (0.1 seconds); this allows better observation of the system response.
  - In the Speed Mode » Speed Controller menu, set the Max Speed to a low value (≈1000 rpm), as high speed operation is not needed to observe system response.
  - Set Soft Stop Speed parameter to 0 rpm to disable the soft stop speed function (see Restraint menu, page 35).
- Cycle KSI to clear any faults.
- Using very quick, pulsing throttle movements, increase the throttle and then release it to 0%. The intent is to give the speed controller torque impulses.
- Increase Kp and repeat the throttle tests. Increase Kp until you start to notice marginal stability (normally motor bouncing, or continuous oscillation in the gears, is heard). Note: It is possible that very heavy vehicles will not experience marginal stability even at the highest setting of Kp.
- Once the Kp setting for marginal stability is found, reduce the Kp value by about one third (i.e., final Kp = marginal stability Kp * 2/3).
- If you will be using Speed Mode Express, enter this Kp value for the Kp parameter in the Speed Mode Express menu.
- Set the Brake Type, Accel/Decel Rates, Max Speed, and Soft Stop Speed back to their original values.

e. In the Speed Mode » Response menu, adjust the five Accel and Decel Rate parameters as necessary while moving the throttle to different positions (i.e., neutral to full throttle, half throttle to full throttle, full throttle to half throttle, full throttle to neutral, neutral to low throttle, etc.). For AC pump applications, these parameters are typically set very fast for quick response to hydraulic inputs.

Downloaded from www.Manualslib.com manuals search engine

f. In the Speed Mode » Response menu, adjust the remaining three brake rate parameters as necessary while reversing the throttle input (i.e., full throttle forward to low throttle reverse, full throttle forward to full throttle reverse, full throttle reverse to low throttle forward, etc.).

If a brake input is present in the application (Brake Pedal Enable = On) continue adjusting these three brake rates by applying different amounts of brake throttle (i.e., full throttle forward, then apply full brake or full throttle forward, then apply low brake, etc.). For AC pump applications these parameters have no effect on performance since the AC pump will not run in reverse nor with a brake input.

g. The parameters in the Speed Mode » Response » Fine Tuning menu typically do not need to be changed as the default values work well in most applications.

☞ *AC pump motor applications*, which in step "a" had the Pump Enable parameter set to On, may also be controlling hydraulic valves (load hold valve, proportional valve). The Proportional Driver parameters (page 52) and some VCL will typically be used to set up the control of these valve driver outputs. Consult with your Curtis distributor or support engineer regarding hydraulic valve control.

2 - TORQUE MODE **tuning** *(see pages 37–41)*

a. Set Max Speed to the maximum speed you want to limit the motor to.

b. Kp, Ki, and Kd typically do not need to be changed as the default values will work well in most applications. These parameters control how tightly the controller limits the speed of the motor to the programmed Max Speed.

c. Set Typical Max Speed (page 55) to the expected maximum speed of the motor.

d. Adjust the parameters shown in Figure 9 (page 40) to set up the throttle mapping:

- Regen Current Limit *(Current Limits menu, page 41)*
- Drive Current Limit *(Current Limits menu, page 41)*
- Forward/Back Full Restraint Speed *(Torque Mode » Response menu, page 38)*
- Brake Taper Speed *(Torque Mode » Response » Fine Tuning menu, page 39)*
- Neutral Braking *(Torque Mode » Response menu, page 38)*
- Neutral Taper Speed *(Torque Mode » Response menu, page 38)*
- Creep Torque *(Torque Mode » Response » Fine Tuning menu, page 39)*.

e. In the Torque Mode » Response menu, adjust the four accel, decel, and release rate parameters as necessary while moving the throttle to different positions (i.e., neutral to full throttle, half throttle to full throttle, full throttle to half throttle, full throttle to neutral, neutral to low throttle, etc.).

f. The other parameters in the Torque Mode » Response » Fine Tuning menu typically may need to be changed for some applications. Read the parameter descriptions and adjust as necessary.

Downloaded from www.Manualslib.com manuals search engine

8 VEHICLE CONTROL LANGUAGE (VCL)

Curtis 1232E/34E/36E/38E and 1232SE/34SE/36SE controllers have a built-in programmable logic controller with application-specific functions. VCL (Vehicle Control Language) software provides a way to implement unique and complex vehicle control functions.

VCL is a simple programming language that will feel very familiar to anyone who has worked with BASIC, Pascal, or C. Working with VCL requires the installation of the WinVCL program onto a PC. WinVCL will compile VCL programs and flash download the software into the controller through the computer's serial port. The install process for WinVCL will also install three important manuals on your PC: the WinVCL User's Guide, VCL Programmer's Guide, and VCL Common Functions Manual. These manuals, which are in PDF format, include more detailed information about VCL than is included here.

This section of the manual summarizes VCL and also describes aspects and functions of VCL that are specific to these E and SE controllers. For a more complete understanding of the functions and capabilities of VCL, see the WinVCL User's Guide, VCL Programmer's Guide, and VCL Common Functions Manual.

Summary of VCL Basics

- VCL is not case-sensitive:
  put_pwm(), Put_PWM(), and PUT_PWM() are identical.
- Spaces in variable names are not allowed in VCL; use underscores in place of spaces.
  Example: Forward_Offset is the VCL name for the programmable parameter Forward Offset.
- Functions are followed by parentheses; for example:
  Reset_Controller() is a function
  Reset_Voltage is a variable.
- Logical statements must be inside parentheses; examples:
  IF (setpoint >50)
  ELSE IF ((setpoint <20) & (temperature >100)).
- Comments are preceded by semicolons.

Downloaded from www.Manualslib.com manuals search engine

The VCL functions described in the VCL Common Functions Manual are available on 1232E/SE, 1234E/SE, 1236E/SE, and 1238E controllers. These controllers also have these additional functions:

ENABLE_PRECHARGE() ..... p. 126
DISABLE_PRECHARGE() ..... p. 127
SET_DIGOUT() ..... p. 128
CLEAR_DIGOUT() ..... p. 128
ENABLE_EMER_REV() ..... p. 129
DISABLE_EMER_REV() ..... p. 129
SET_INTERLOCK()..... p. 130
CLEAR_INTERLOCK()..... p. 130
SETUP_POT_FAULTS()..... p. 131
START_PUMP() ..... p. 132
STOP_PUMP() ..... p. 132
AUTOMATE_FREQUENCY_OUTPUT() ..... p. 133

These functions, which are not included in the VCL Common Functions Manual, are described at the end of Section 8.

VARIABLE TYPES

VCL provides dedicated space in which to store custom variables. There are four types of variables, based on their type of storage: volatile storage (RAM) and three types of non-volatile storage (EEPROM) are available.

RAM variables are stored only while power is on; they are lost at power-down. They must be initialized on power-up by explicit VCL assignments (i.e., User1 = 12).

NVUser1–15 EEPROM variables are 15 variables stored at power-down and recalled by the operating system when the NVM_NVUser_Restore function is used. Thus, they can then be recalled at the next power-on cycle, which restores their previous values. See the section on non-volatile memory access in the VCL Common Functions manual for more information.

Block EEPROM are 38 blocks of 15 variables (total of 570 variables), which are stored and recalled using the functions NVM_Block_Read and NVM_Block_Write. The 38 blocks are called NVM3–NVM40. The read and write functions must point to the RAM variables that the EEPROM blocks should be written from or read to. For example, NVM_Block_Read(NVM10,0,15,User20) will read the 15 variables stored in EEPROM block NVM10 and restore those variables to the 15 variables starting with RAM variable User20 (so the 15 EEPROM variables would be restored to User20–34). See the section on non-volatile memory access in the VCL Common Functions manual for more information.

Parameters EEPROM variables are a special type of EEPROM variable that is intended to be used to create OEM defined programmable parameters. These parameters can be defined as 16-bit by using the P_User variables or

Downloaded from www.Manualslib.com manuals search engine

they can be defined as bit (On/Off) by using the P_User_Bit variables. These variables are typically written to EEPROM through the 1313 handheld or 1314 PC programmer interface (i.e., when a user changes a parameter setting using the programmer). They can be used in the VCL code, but changing a P_User (or P_User_Bit) value with VCL will only change the variable value in RAM and will **not** change the value in EEPROM. Thus, these variables are intended for creating and defining programmable parameters only.

TYPE	QUANTITY	RANGE
RAM	420 variables	User1 – User120 AutoUser1 – AutoUser300
NVUser EEPROM	15 variables	NVUser1 – NVUser15
Block EEPROM	38 blocks (15 variables each)	NVM3 – NVM40
Parameters EEPROM	150 variables and 10 variables of 8 bits each (80 bits)	P_User1 – P_User150 P_User_Bit1 – P_User_Bit10

VCL can modify the control mode parameters in RAM by using the VCL variable name for the programmable parameter. For example,

```
Brake_Rate_SpdMx = 3000 ;Change Brake Rate to 3.0sec
```

will change the RAM value of the Speed Mode Express's Brake Rate; the new value will be used in determining the braking rate. However, the value of the parameter's stored EE value remains unchanged; when the controller is turned off, the RAM value will be lost. The next time the controller is powered back on, the "old" value of Brake Rate will be restored from EE memory. To save this RAM value in VCL, you must use the NVM_Write_Parameter function ((i.e., NVM_Write_Parameter(Brake_Rate_SpdMx)).

Parameter values that are changed by using the 1313 handheld or 1314 PC programmer are saved directly to EE memory. The 1313/1314 changes will be retained and restored the next time the controller is powered back on.

Downloaded from www.Manualslib.com manuals search engine

VCL RUNTIME RATES

VCL is an interpreted language. Each line of VCL code is converted (compiled) into a set of codes and then flash loaded into the controller. The controller interprets these codes one line at a time while the system is powered up. Here are the processing rates of the various functions:

FUNCTION	FUNCTION FULL NAME	INSTANCES	SERVICE RATE
ABS	Absolute Value	2	4 ms
ADC	Analog to Digital Converter Input	2	1 ms
CAN	CAN Communications	24	4 ms
CPY	Copy	8	4 ms
DLY	Delay	32	1 ms
FLT	Filter	4	1 ms
LIM	Limit	4	4 ms
MAP	Map	8	4 ms
MTD	Multiply then Divide	4	4 ms
NVM	Non-Volatile Memory	38	2 ms
PID	Proportional Integral Derivative	2	4 ms
POT	Potentiometer Input	2	8 ms
PWM	Pulse Width Modulated Output	6	4 ms
RMP	Ramp	4	1 ms
SCL	Scaling	8	4 ms
SEL	Selector, 2-position switch	8	4 ms
SEL_4P	Selector, 4-position switch	8	32 ms
SW	Switch Input	1*	4 ms
TMR	Timers (hourmeters)	3	1 ms

* There is only one Switch variable; it has 16 associated bit-variables.

I/O CONTROL WITH VCL

Digital Inputs

The controllers each have 16 digital inputs. Nine are switch inputs (Sw_1 through Sw_8, and Sw_16. These switch inputs are shown on the standard wiring diagram (Figure 3, page 12). The remaining seven digital inputs are less obvious: one on each driver and digital output (Sw_9 through Sw_15). These can be used as digital inputs or to sense the state of the output or its wiring (e.g., open coil check).

To address a digital input in a VCL program, use the desired input label (Sw_1 through Sw_16). You must use On or Off in the code when determining a switch state; using true/false or 1/0 will give erroneous results.

Downloaded from www.Manualslib.com manuals search engine

```
if   (Sw_1 = ON)
     {
     ;put code here to run when switch 1 is On
     }
if (Sw_16 = OFF)
     {
     ;put code here to run when switch 16 is Off
     }
```

All switch inputs are automatically debounced by the VCL operating system. This prevents noisy contacts or contact bounce from causing erroneous events in your VCL code. The debounce time can be varied from 0 to 32 milliseconds in 4ms steps, using this function:

```
Setup_Switches(5); 20 milliseconds
```

If this line is not in the VCL code, the debounce time is set at 16 ms.

Driver and Digital Outputs

There are five driver outputs (PWM1 through PWM5) and two digital outputs (DigOut6 and DigOut7). These outputs have variations in current and frequency range. For their specifications, see "digital and PWM outputs" on page 20.

Driver outputs have high current FET output stages and can be pulse width modulated (PWM) to vary the average output to inductive loads such as contactors and relays. This is useful when the battery voltage needs to be brought down for lower voltage coils. The two digital outputs are 1 A drivers that are only On or Off.

Drivers use a special VCL function to set their PWM level. This PWM level can be set up in a signal chain to update automatically or can be set directly in the main loop. PWM can be set from 0–100% using the digital range of 0 to 32767.

```
Put_PWM(PWM2,16384)
```

will output a 50% waveform on Driver 2.

```
Automate_PWM(PWM2,@user1)
```

will continually update the Driver 2 output with the present value of variable User1. This automate statement needs only to be run once, usually in the initialization section of the VCL program. VCL can monitor the present value of a PWM driver: the variable PWMx_Output (where "x" is the PWM channel number) is automatically filled with the present value of the driver output.

The proportional driver (Driver 5) is different from Drivers 1–4. It can be controlled in two ways: with the proportional driver processing function (see Figure 17, page 119) or with the VCL Put_PWM() function. The VCL statement Put_PWM(PWM5, 16383) will result in a 50% PWM output on pin 2 only if the parameter PD Enable is set to Off. See page 117 for more information on interfacing the proportional driver.

Control of the two digital outputs (Digital Outputs 6 and 7) is done using the VCL functions Set_Digout() and Clear_Digout().

Downloaded from www.Manualslib.com manuals search engine

```
Set_DigOut(DigOut6)
```

will set Digital Output 6 On (active). VCL can monitor the present value of a digital output driver: the bit variable Digx_Output (where "x" is the digital output channel number) is automatically filled with the present value of the driver output (On or Off).

It is important to note that all outputs are active Low. With 100% PWM or an output of "On," the FET or transistor will be pulling hard to ground. A DVM on the output will measure near 0 volts.

Potentiometer Inputs

These controllers have two potentiometer inputs, which are typically used for throttle and brake. Many features (mapping, acceleration rates, etc.) are built in as 1313/1314 programmer parameters. Still, there are times that these potentiometer inputs may be needed for other functions such as steering angle or height sensing, or simply as data inputs. The standard way to input pot information is to set the parameter Throttle Type (or Brake Type) to an appropriate value of 1–4 as shown on pages 13–16. When set to a value of 1–4, the resulting signal chain can operate without the use of any VCL.

However, if an OEM wishes to control the throttle (or brake) signal chain in VCL or use the throttle (or brake) inputs for signals that are not throttle (or brake) signals, then the parameter Throttle Type (or Brake Type) should be set to a value of 5 (page 17). Setting the parameter Throttle Type (or Brake Type) to a value of 5 changes the routing of the appropriate signal chain (either throttle or brake) and allows the VCL programmer access to the Throttle Pot (or Brake Pot) output variables; see Figure 15 (page 114).

Typically the Setup_Pot() function is executed at the beginning of a VCL program to define the potentiometer input connection as THREE_WIRE (uses Pot High and Pot Low connections), TWO_WIRE (variable resistor, or rheostat, uses Pot Low but no connection to Pot High), or ONE_WIRE (a voltage input, no connection to either Pot High or Pot Low). THREE_WIRE potentiometer connections are the same as the 3-wire potentiometer connections shown on page 15 for a Throttle Type 2. TWO_WIRE potentiometer connections are the same as the 2-wire potentiometer connections shown on page 14 for a Throttle Type 1. ONE_WIRE potentiometer connections are the same as the Voltage Source or Current Source connections shown on page 15 for a Throttle Type 2.

Note that the Setup_Pot() function will only work (and is only needed) if the corresponding Type is set to 5 (Throttle Type = 5 or Brake Type = 5).

```
Setup_Pot(THROTTLE_POT,THREE_WIRE)
```

will set up the throttle pot input for wiring using all three connections (pins 15, 16, 18).

To set up the brake pot input for use in VCL, use the Brake_Pot constant in place of the Thottle_Pot constant in the Setup_Pot function.

```
Setup_Pot(BRAKE_POT,TWO_WIRE)
```

will set up the brake pot input for wiring using two connections (pins 17, 18).

Downloaded from www.Manualslib.com manuals search engine

The 0–100% position of the potentiometer is represented by a value from 0–32767 in VCL, and is set up through the VCL Setup_Pot() function. It is important to use the correct setup (ONE_WIRE, TWO_WIRE, or THREE_WIRE) since the input is automatically re-scaled for 0–100% based on the wiring used; for example, the voltage at the Pot Low pin is automatically subtracted and re-scaled on a THREE_WIRE pot.

Another effect of setting the Throttle Type = 5 is that the signal chain for the throttle now gets its input from a different source. The input to the throttle chain is now a VCL variable called VCL_Throttle instead of the throttle pot. Similarly, Brake Type = 5 means the brake signal chain will get its input from a VCL variable called VCL_Brake rather than from the brake pot. The VCL_Throttle and VCL_Brake variables will need to be controlled in the VCL program.

One of the unique features of the potentiometer inputs (as opposed to the analog inputs) is that they have automatic pot fault detection functions running in the motor controller OS. The VCL programmer has access to the pot detection functions with the Setup_Pot_Faults() function. With this function, VCL can set the high and low threshold at which a fault occurs. This function also forces the pot value to a definable level if a fault occurs. Note that the Setup_Pot_Faults() function will work for all throttle Types (1–5). See page 131 for more detail on this function.

Analog Inputs

These controllers have two generic analog inputs (pins 24 and 8). These are shared as switch inputs 1 and 2 (Sw_1, Sw_2). The values of the analog inputs are automatically placed in VCL variables Analog1_Input and Analog2_Input every 1 millisecond. Scaling is 0–10V = 0–1023.

```
User2 = Analog2_Input
```

will fill the User2 RAM variable with the value of the voltage at pin 8.

The filtered values of the analog inputs are also available and are automatically placed in VCL variables Analog1_Filtered and Analog2_Filtered. Scaling is 0–10V = 0–1023. The default filter value is 328 (10 Hz) and can be changed in VCL by changing the Analog1_Filter and Analog2_Filter values. Scaling is 0–999 Hz = 0–32767.

Analog Output

The 1234E/36E/38E and 1234SE/36SE controllers have one analog output (pin 30); the 1232E/SE has no analog output. This output is a special driver output. The switching stage is filtered to provide a smooth average voltage, instead of the actual PWM waveform seen on Drivers 1–5. However, AnalogOut

Downloaded from www.Manualslib.com manuals search engine

uses the same Put_PWM() and Automate_PWM() used by these other drivers. The scaling is 0–10 V = 0–32767.

```
Put_PWM(PWM6,6553)
```

will generate 2.0 volts at the analog output. VCL can monitor this output using the variable Analog_Output.

INTERFACING THE THROTTLE AND BRAKE COMMANDS

VCL can interface and modify the throttle and brake signals at several points, from the potentiometer to the final motor controller command. VCL can be used to create a completely unique command, adjust parameters to provide MultiMode, or modify the throttle command based on steering angle, height, etc.

The throttle and brake signal chains within the controller are sophisticated and flexible. Before applying VCL to modify these chains, it is important to fully understand the ramifications of these changes. The motor command diagram is presented in Figure 15.

Throttle Processing

The top of Figure 15 shows the throttle processing section. The throttle signal chain flows left to right starting with the physical throttle pot. The voltage on the throttle wiper input (pin 16) is input into the controller and has the VCL variable name Throttle_Pot_Raw which is displayed in the Monitor » Inputs menu of the 1313/1314 programmer. This throttle signal is then modified by the Throttle Type Processing and Throttle Mapping blocks.

The Throttle Type Processing block combines the Throttle_Type parameter (see page 44) and the throttle potentiometer input (Throttle_Pot_Raw) to create a 16-bit variable containing the magnitude of the raw command. This raw command passes to the Throttle Mapping block, which re-shapes the throttle signal magnitude and direction based on the various Throttle Menu parameters (see pages 44–46) and the direction inputs.

Following the Throttle Mapping block are two switches whose purpose is to give the throttle signal a small value (1 for the forward switch, and -1 for the reverse switch) to indicate that a direction switch is On—but only if the throttle signal output from the Throttle Mapping block = 0.

The signal then passes through a selector switch. If the Throttle_Type parameter is set to 5 (Throttle Type = VCL input, see page 44), the Throttle Mapping block output signal is ignored and the command comes from the VCL variable VCL_Throttle. The VCL program manipulates the VCL_Throttle variable to get a throttle command. When the Throttle Type is set to 1–4, the variable VCL_Throttle does nothing, and the Throttle Mapping block output signal passes through.

After the "Throttle Type = 5" switch, the throttle signal is modified by the multiplying and summing nodes. These nodes can be adjusted by VCL through the variables Throttle_Multiplier and Throttle_Offset. This is the basic input point for creating functions like MultiMode, dual drive algorithms, and height vs. speed control. Note that the throttle multiplier has a built-in "divide by 128."

Downloaded from www.Manualslib.com manuals search engine

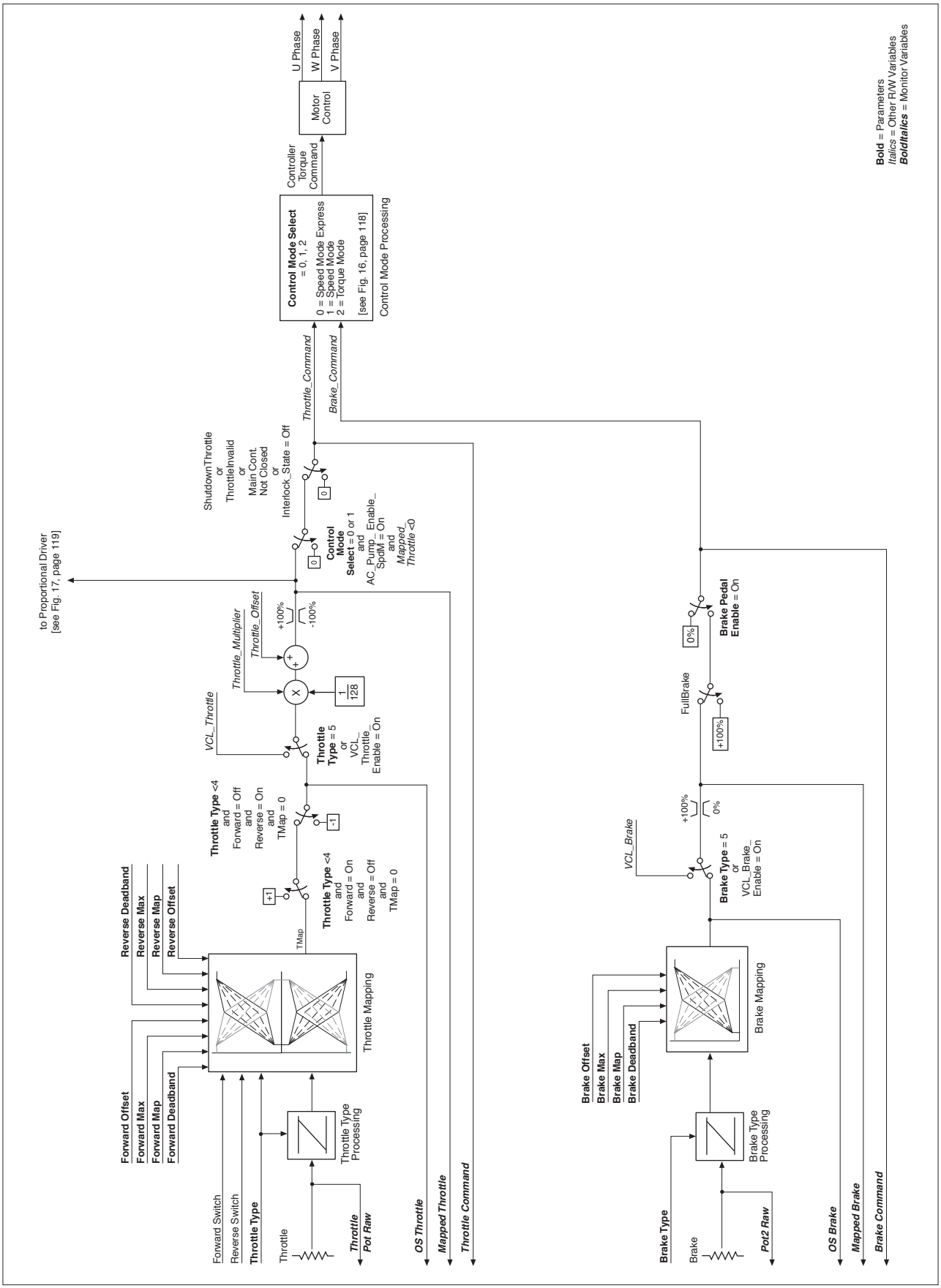

Fig. 15 *Motor command diagram.*

Downloaded from www.Manualslib.com manuals search engine

This allows the VCL to either multiply (Throttle_Multiplier > 128) or divide (Throttle_Multiplier < 128) the nominal throttle value. Typically the default multiplier is set to 128, thus having no net effect. Both Throttle_Multiplier and Throttle_Offset can be positive or negative.

The output of the multiplying and summing nodes is a VCL variable called Mapped_Throttle, which is displayed in the Monitor » Inputs menu of the 1313 handheld or 1314 PC programmer. Checking the value of Mapped_Throttle using the programmer is a good way to see if your Throttle Menu parameters are set correctly. A VCL program can control the throttle by changing the variables VCL_Throttle (only if Throttle Type = 5), Throttle_Multiplier, and Throttle_Offset. The effect of these variables can be observed as Mapped_Throttle in the Monitor » Inputs menu.

Mapped_Throttle next passes through a limiter that is active only if a pump motor is being operated (Pump Enable = On, see page 36). When active, this function limits the throttle signal to only positive (forward) motion, which is appropriate for controlling a hydraulic pump motor.

The throttle signal continues to a selector switch that will set the throttle signal = 0% if any of the following conditions is present: Interlock_State = Off (see page 74), a fault has set throttle request = 0% (see the Troubleshooting Chart, Table 5), or if Main_State ≠ 5 or 10 (see page 80).

After this selector switch the throttle signal is a VCL variable called Throttle_Command, which is displayed in the Monitor » Inputs menu. Throttle_Command is the final value of the throttle signal chain that is input to the Control Mode Processing block; see Figure 16. If ABS(Throttle_Command) > 1 count, the motor controller will output signals to the motor to make it spin.

For investigating why a motor is <u>not</u> spinning, it is useful to use the 1313/1314 programmer to check the state of the throttle signal from beginning to end: using Throttle_Pot_Raw, Mapped_Throttle, and Throttle_Command. Once these values are known, the Motor Command Diagram (Figure 15) can be used to find how that signal progressed from input to final value.

The following throttle processing variables are accessible by VCL.

VCL VARIABLE	ACCESS	DESCRIPTION
Throttle_Pot_Raw	Read Only	Voltage measurement at pin 16, scaled for the proper wiring
OS_Throttle	Read Only	Throttle pot value after mapping, to be used in VCL when VCL Throttle Enable = On and Throttle Type = 1–4
Mapped_Throttle	Read Only	Throttle pot value after mapping
VCL_Throttle	Read/Write	VCL-accessible throttle command
Throttle_Multiplier	Read/Write	Multiplies or divides the throttle signal
Throttle_Offset	Read/Write	Provides a +/- offset to the throttle signal
Throttle_Command	Read Only	Command resulting from throttle processing

Downloaded from www.Manualslib.com manuals search engine

Brake Processing

Brake processing is optional as it can be turned Off (by setting Brake_Pedal_Enable = Off, see page 47). If turned On, brake processing can be done with or without VCL. When the controller is in Speed Mode, any non-zero brake command will then override the throttle signal and the motor controller will brake to a stop as determined by the parameters Brake Current Limit (page 41) and Brake Taper Speed (page 39). When the controller is in Torque Mode, the brake command is multiplied by 2 and subtracted from the throttle command to produce the final command; thus a 50% brake command will cancel a 100% throttle command.

The lower part of Figure 15 shows the brake signal processing section. The brake signal chain flows from left to right starting with the physical brake pot. The voltage on the brake wiper input (pin 17) is input into the controller and has the VCL variable name Pot2_Raw which is displayed in the programmer's Monitor » Inputs menu. This brake signal is then modified by the Brake Type Processing and Brake Mapping blocks.

The Brake Type Processing block uses the Brake_Type parameter (page 47) and the brake potentiometer input (Pot2_Raw) to create a signed 16-bit variable. This brake signal then passes to the Brake Mapping block, which re-shapes the brake signal according to the various Brake Menu parameters (page 47).

The signal then passes through a selector switch. If the Brake_Type parameter is set to 5 (Brake Type = VCL input, see page 47), the Brake Mapping block output signal is ignored and the command comes from the VCL variable VCL_Brake. The VCL program manipulates the VCL_Brake variable to get a brake command. Custom braking functions can be set up in this fashion; e.g., braking based on a switch position or an internal fault. The brake potentiometer can still be used, but must be set up using the Setup_Pot() function. When the Brake Type is set to 1–4, the variable VCL_Brake does nothing and the Brake Mapping block output signal passes through.

After the "Brake Type = 5" switch, the brake signal passes through a limiter which limits the brake signal to a range of 0–100% (0–32767). After the limiter the brake signal is a VCL variable called Mapped_Brake, which is displayed in the Monitor » Inputs menu. Checking the value of Mapped_Brake is a good way to see if your Brake Menu parameters are set correctly. A VCL program can control the brake by changing the variable VCL_Brake (only if Brake Type = 5).

The brake signal then goes through a second selector switch that will set the brake signal = 0% if the Brake Pedal Enable parameter (page 47) is set Off. If set On then the brake signal will pass through. The brake signal after this second selector switch is a VCL variable called Brake_Command, which is displayed in the 1313/1314 programmer's Monitor » Inputs menu.

Brake_Command is the final value of the brake signal chain that is input to the Control Mode Processing block; see Figure 16. If Brake_Command is non-zero in Speed Mode Express or Speed Mode, the throttle signal will be set to 0%.

Downloaded from www.Manualslib.com manuals search engine

The following brake processing variables are accessible by VCL.

VCL VARIABLE	ACCESS	DESCRIPTION
Pot2_Raw	Read Only	Voltage measurement at pin 17
OS_Brake	Read Only	Brake pot value after mapping, to be used in VCL when VCL Brake Enable = On and Brake Type = 1–3
VCL_Brake	Read/Write	VCL-accessible brake command
Mapped_Brake	Read Only	Brake pot value after mapping
Brake_Command	Read Only	Command resulting from brake processing

Control Mode and Motor Control Processing

Figure 16 begins with the Throttle_Command and Brake_Command inputs and a switch that will zero the Throttle_Command if Brake_Command is any value but 0%. The signal chains are then directed to Speed Mode Express, Speed Mode, or Torque Mode based on Control Mode Select. Note that in Torque Mode there is no emergency reverse.

The control mode function uses algorithms to convert the incoming throttle and brake signals and the motor rpm input into a Controller Torque Command.

The selected control mode calculates the desired Controller Torque Command, which is passed to the Motor Control block (see Figure 16). The Motor Control block uses its mathematical model of the specific AC induction motor used to generate the high efficiency three-phase outputs that are output to the AC motor via the cables connected to the **U**, **V**, and **W** terminals.

INTERFACING THE PROPORTIONAL CURRENT DRIVER

VCL code can directly interface the proportional current driver (PD), as shown in Figure 17. VCL can change the working parameters of the PD and can provide the command.

Depending on how the PD system is to be used, certain parameters need to be set; they can be set via the 1313/1314 programmer or via VCL.

1. PD_Enable must be set On for current control, otherwise the PD_Output will be controlled by the VCL function Put_PWM(PWM5,xxxx), which is voltage control.
2. Hyd_Lower_Enable must be set On to use the throttle input to control lowering in a hydraulic lift/lower system.
3. Hyd_Lower_Enable must be set Off to allow using a VCL variable (VCL_PD_Throttle) as the PD command.

Once the PD parameters are set, the PD_Throttle variable will be mapped between PD_Min_Current and PD_Max_Current and sent to the dither

Downloaded from www.Manualslib.com manuals search engine

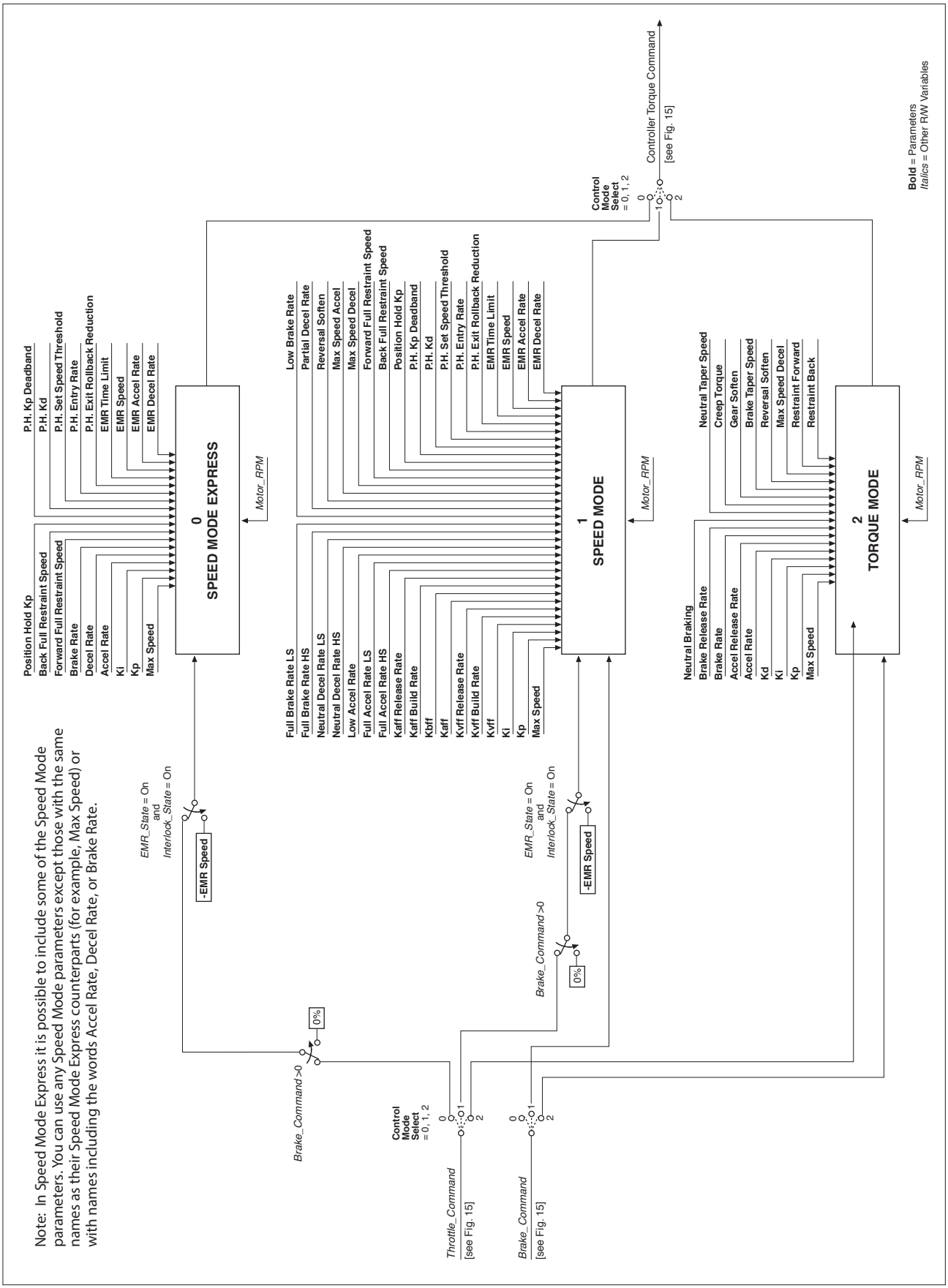

Fig. 16 *Control Mode processing.*

Downloaded from www.Manualslib.com manuals search engine

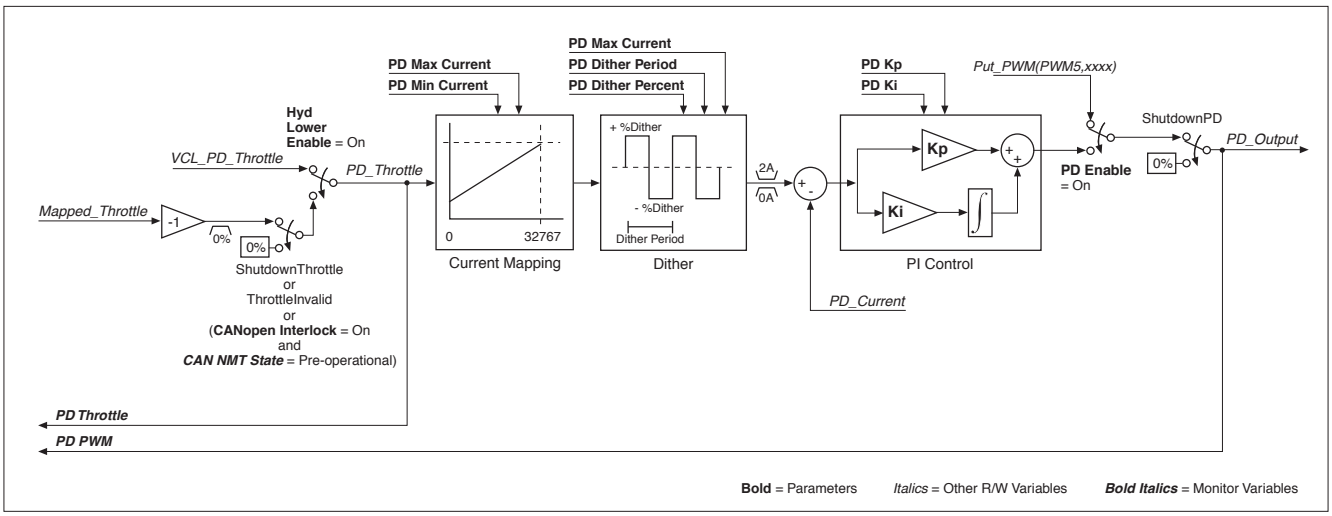

Fig. 17 *Proportional driver processing.*

function. Note that Mapped_Throttle is inverted; lowering its value (making it more negative) increases the PD_Throttle value.

The Dither function adds and subtracts from the current command to the PD based on PD_Dither_Percent, at a rate set by PD_Dither_Period.

The dithered current command is compared to the present PD_Current and the error is fed into a PI controller. The feedback gains are set by the parameters PD Kp (proportional gain) and PD Ki (integral gain). The final output is the VCL variable PD_Output, which is displayed in the 1313/1314 programmer's Monitor » Outputs menu as PD PWM.

The following PD processing variables are accessible by VCL.

VCL VARIABLE	ACCESS	DESCRIPTION
Mapped_Throttle	Read Only	Command from throttle section
VCL_PD_Throttle	Read/Write	VCL-accessible PD command
PD_Throttle	Read Only	Resultant command to the PD
PD_Current	Read Only	Average current flowing in the PD
PD_Output	Read Only	Resultant PWM at PD output

Downloaded from www.Manualslib.com manuals search engine

USING THE FAULT HANDLER IN VCL

The operating system of the controller detects various faults and takes appropriate fault actions to protect the controller. These faults have fault codes that are flashed on the controller status LEDs, and fault text is displayed in the System Faults and Fault History menus of the 1313 handheld and 1314 PC programmers. These operating system faults are covered in Section 9. Additionally, the operating system makes the status of the operating system faults available for use in VCL programs in the form of nine variables called Status1, Status2, Status3, Status4, Status5, Status6, Status7, Status8, and Status9. Each of these 16-bit variables contains the status of 8 faults in the lower byte (the upper byte is always set to 0). These Status1–9 variables are read only (RO) and can be used in a VCL program to trigger additional fault actions such as sending fault text messages to a display or blinking a dashboard LED.

Here are the bit locations of each of the operating system faults in the Status1–9 variables:

```
Status1
*      Bit0 = Main Contactor Welded (Code 38)
*      Bit1 = Main Contactor Did Not Close (Code 39)
*      Bit2 = Pot Low OverCurrent (Code 45)
*      Bit3 = Throttle Wiper Low (Code 42)
*      Bit4 = Throttle Wiper High (Code 41)
*      Bit5 = Pot2 Wiper Low (Code 44)
*      Bit6 = Pot2 Wiper High (Code 43)
*      Bit7 = EEPROM Failure (Code 46)

Status2
*      Bit0 = HPD/Sequencing Fault (Code 47)
*      Bit1 = Severe B+ Undervoltage (Code 17)
*      Bit2 = Severe B+ Overvoltage (Code 18)
*      Bit3 = B+ Undervoltage Cutback (Code 23)
*      Bit4 = B+ Overvoltage Cutback (Code 24)
*      Bit5 = Sin/Cos Sensor Fault (Code 36)
*      Bit6 = Controller Overtemp Cutback (Code 22)
*      Bit7 = Controller Severe Undertemp (Code 15)

Status3
*      Bit0 = Controller Severe Overtemp (Code 16)
*      Bit1 = Coill Driver Open/Short (Code 31)
*      Bit2 = Coi12 Driver Open/Short (Code 32)
*      Bit3 = Coil3 Driver Open/Short (Code 33)
*      Bit4 = Coi14 Driver Open/Short (Code 34)
*      Bit5 = PD Open/Short (Code 35)
*      Bit6 = Main Open/Short (Code 31)
*      Bit7 = EMBrake Open/Short (Code 32)

Status4
*      Bit0 = Precharge Failed (Code 14)
*      Bit1 = Digital Out 6 Open/Short (Code 26)
*      Bit2 = Digital Out 7 Open/Short (Code 27)
*      Bit3 = Controller Overcurrent (Code 12)
*      Bit4 = Current Sensor Fault (Code 13)
*      Bit5 = Motor Temp Hot Cutback (Code 28)
*      Bit6 = Parameter Change Fault (Code 49)
*      Bit7 = Motor Open (Code 37)
```


Downloaded from www.Manualslib.com manuals search engine

```
Status5
*      Bit0 = External Supply Out of Range (Code 69)
*      Bit1 = Motor Temp Sensor Fault (Code 29)
*      Bit2 = VCL Run Time Error (Code 68)
*      Bit3 = +5V Supply Failure (Code 25)
*      Bit4 = OS General (Code 71)
*      Bit5 = PDO Timeout (Code 72)
*      Bit6 = Encoder Fault (Code 36)
*      Bit7 = Stall Detected (Code 73)

Status6
*      Bit0 = Bad Calibrations (Code 82)
*      Bit1 = [Not Used]
*      Bit2 = Emer Rev HPD (Code 47)
*      Bit3 = [Not Used]
*      Bit4 = Motor Type Fault (Code 89)
*      Bit5 = Supervisor Fault (Code 77)
*      Bit6 = Motor Characterization Fault (Code 87)
*      Bit7 = [Not Used]

Status7
*      Bit0 = [Not Used]
*      Bit1 = VCL/OS Mismatch (Code 91)
*      Bit2 = EM Brake Failed to Set (Code 92)
*      Bit3 = Encoder LOS (Limited Operating Strategy) (Code 93)
*      Bit4 = Emer Rev Timeout (Code 94)
*      Bit5 = Dual Severe Fault (Code 75)
*      Bit6 = Fault On Other Traction Controller (Code 74)
*      Bit7 = Illegal Model Number (Code 98)

Status8
*      Bit0 = [Not Used]
*      Bit1 = [Not Used]
*      Bit2 = [Not Used]
*      Bit3 = Parameter Mismatch (Code 99)
*      Bit4 = Severe KSI Undervoltage (Code 17)
*      Bit5 = [Not Used]
*      Bit6 = [Not Used]
*      Bit7 = Encoder Pulse Count Fault (Code 88)

Status9
*      Bit0 = Supervisor Incompatible (Code 78)
*      Bit1 = [Not Used]
*      Bit2 = [Not Used]
*      Bit3 = [Not Used]
*      Bit4 = [Not Used]
*      Bit5 = [Not Used]
*      Bit6 = Driver Supply Fault (Code 83)
*      Bit7 = Following Error (Code 48)
```


Downloaded from www.Manualslib.com manuals search engine

OEM-defined User Faults

The operating system also provides the capability to create OEM-defined custom faults using VCL. Just as with system faults, the VCL fault codes are flashed on the controller Status LEDs and fault text is displayed on the System Faults and Fault History menus of the 1313/1314 programmer. Optionally, the VCL can assign fault actions to occur automatically when the associated fault is set. Sixteen VCL faults are available, stored in the VCL variables UserFault1 and UserFault2. The UserFault1,2 variables are Read/Write (R/W) and the 16 faults are stored in the lower byte of each variable like this:

```
UserFaultl
*      Bit0 = VCLfault1 (Code 51)
*      Bit1 = VCLfault2 (Code 52)
*      Bit2 = VCLfault3 (Code 53)
*      Bit3 = VCLfault4 (Code 54)
*      Bit4 = VCLfault5 (Code 55)
*      Bit5 = VCLfault6 (Code 56)
*      Bit6 = VCLfault7 (Code 57)
*      Bit7 = VCLfault8 (Code 58)

UserFault2
*      Bit0 = VCLfault9  (Code 59)
*      Bit1 = VCLfault10 (Code 61)
*      Bit2 = VCLfault11 (Code 62)
*      Bit3 = VCLfault12 (Code 63)
*      Bit4 = VCLfault13 (Code 64)
*      Bit5 = VCLfault14 (Code 65)
*      Bit6 = VCLfault15 (Code 66)
*      Bit7 = VCLfault16 (Code 67)
```

The “Code” numbers result in the flashing of the controller status LEDs that help identify the fault without use of a programmer. Setting the fault in VCL is done by setting the associated fault bit in the UserFault1 and 2 variables. Clearing the fault must also be handled by VCL and is done by clearing the associated fault bit. For example:

```
if (BDI-Percentage < 10)
       {
       UserFault1.2 = ON           ;Set VCL Fault bit
       }
else
       {
       UserFault1.2 = OFF          ;Clear VCL Fault bit
       }
```

This VCL will check to see if the Battery Discharge Indicator is less than 10%. If it is, UserFault1 Bit1 (Code 52) is set. If the BDI is not less than 10%, the fault is cleared. Using just the VCL above in a program will only result in the flashing of a code 52 on controller status LEDs and no fault actions will result nor will the programmer display any text about the fault.

Downloaded from www.Manualslib.com manuals search engine

To add automatic fault actions to the VCL faults, the VCL programmer must define the desired fault actions by using the sixteen VCL variables: User_Fault_Action_01 through User_Fault_Action_16. Each of the UserFault bits has a corresponding User_Fault_Action_xx variable (where "xx" is the number of the VCL fault bit). When a VCL fault bit is set, the actions defined in the corresponding User_Fault_Action_xx variable will be automatically executed by the operating system. Here are the fault actions available in the User_Fault_Actions_xx variables:

```
          VARIABLE                          FAULT ACTION
User_Fault_Action_xx
*     Bit0 = ShutdownMotor          Disable the motor
*     Bit1 = ShutdownMainContactor  Shut down the main contactor
                                    (only if Main Enable = On)
*     Bit2 = ShutdownEMBrake        Shut down the EM brake
                                    (only if EM Brake Disable Upon
                                    Fault = On)
*     Bit3 = ShutdownThrottle       Set the Throttle_Command = 0%
*     Bit4 = ShutdownInterlock      Set the Interlock_State = Off
*     Bit5 = ShutdownDriver1        Shut down Driver1
*     Bit6 = ShutdownDriver2        Shut down Driver2
*     Bit7 = ShutdownDriver3        Shut down Driver3
*     Bit8 = ShutdownDriver4        Shut down Driver4
*     Bit9 = ShutdownPD             Shut down Proportional Driver
*     Bit10 = FullBrake             Set the Brake_Command = 100%
*     Bit11 = [reserved]            [n/a]
*     Bit12 = TrimDisable           Disable Dual Drive trim
                                    calculation.
*     Bit13 = SevereDual            For Dual Drive system, one con-
                                    troller has a severe fault but
                                    the main contactor must stay
                                    closed so the other controller
                                    can continue to operate.
*     Bit14 = ShutdownSteer         Steer angle = 0°
*     Bit15 = LOSDual               For Dual Drive system, set the
                                    max speed to Dual_LOS_Max_Speed
                                    parameter for operation in
                                    Limited Operating Strategy.
```

The User_Fault_Action_xx variables should be set up at the beginning of a VCL program (before the main loop) as these fault actions should be defined only once in a program. Here is another example:

```
User_Fault_Action_02 = 24   ;Set fault action to ShutdownInterlock
                            ;and ShutdownThrottle

MainLoop:
if (BDI_Percentage < 10)
       {
       UserFault1.2 = ON        ;Set User Fault bit
       Put_Spy_Text("BDI Low")  ;Send message to Model 840 display
       }
else
       {
       UserFault1.2 = OFF       ;Clear User Fault bit
       }
goto MainLoop
```

This time when UserFault1.2 is set, the operating system will ShutdownInterlock and ShutdownThrottle (which will result in a Throttle_Command = 0%) in ad-

Downloaded from www.Manualslib.com manuals search engine

dition to flashing the code 52 on the controller status LEDs. An additional VCL line was added (Put_Spy_Text ("BDI Low")) to show how additional actions beyond those provided in the User_Fault_Action_xx can be programmed using VCL. In this example the Put_Spy_Text("BDI Low") will result in the message "BDI Low" appearing on the model 840 display (presumably as a message to the vehicle operator). This example will still not result in any display on the 1313/1314 programmer System Faults and Fault History menus.

To add the fault text on the System Faults and Fault History menus it is necessary to create a Fault Definition. Creating fault definitions is a subject that is covered in detail in the VCL Programmer's Guide (Section 5, Support for the 1313 Handheld Programmer). Here is an example of a fault definition:

```
User_Fault_Action_02 = 24   ;Set fault action to ShutdownInterlock
                            ;and ShutdownThrottle

MainLoop:
if (BDI_Percentage < 10)
       {
       UserFault1.2 = ON        ;Set User fault bit
       Put_Spy_Text("BDI Low")  ;Send message to Model 840 display
       }
else
       {
       UserFault1.2 = OFF       ;Clear User fault bit
       }
goto MainLoop

;  PARAMETER_ENTRY   "BDI Low Fault"
;  TYPE              FAULTS
;  WIDTH             8BIT
;  ALT_ADDRESS       Hist_UserFault1
;  ADDRESS           UserFault1
;  BITSELECT         1
;  BITACTIVELOW      NO
;  END
```

This example will result in the exact same actions as the last example, except now the fault will be displayed in the programmer's System Faults menu (only while the fault is set) and this fault will be logged into the Fault History menu after being set. The text displayed in either of these menus will be the text defined in the fault definition (in this example "BDI Low Fault" will be displayed). The variable Hist_UserFault1 is listed as an ALT_ADDRESS. This line controls whether the fault gets logged into fault history (and thus appears in the programmer's Fault History menu). The two variables that can be used in the fault definitions for ALT_ADDRESS are Hist_UserFault1 and Hist_UserFault2; these should be used in the fault definitions with the corresponding UserFault1 and UserFault2 variables. If you wish to use VCL to clear fault history, use the VCL function Clear_Diaghist(). Also note that this example fault definition was for bit 1 of UserFault1. The VCL example set and cleared this bit by using the UserFault1.2 notation (".2" being the mask that defines bit 1).

Downloaded from www.Manualslib.com manuals search engine

CAN Indexes for the User Fault Variables

The CAN indexes for the various OEM-defined VCL user fault variables are shown below.

```
0x3238 0x00  UserFault1
0x389A 0x00  UserFault1_History
0x3231 0x00  Hist_UserFault1

0x3239 0x00  UserFault2
0x389B 0x00  UserFault2_History
0x3232 0x00  Hist_UserFault2

0x323B 0x00  User_Fault_Action_01
0x323C 0x00  User_Fault_Action_02
0x323D 0x00  User_Fault_Action_03
0x323E 0x00  User_Fault_Action_04
0x323F 0x00  User_Fault_Action_05
0x3240 0x00  User_Fault_Action_06
0x3241 0x00  User_Fault_Action_07
0x3242 0x00  User_Fault_Action_08
0x3243 0x00  User_Fault_Action_09
0x3244 0x00  User_Fault_Action_10
0x3245 0x00  User_Fault_Action_11
0x3246 0x00  User_Fault_Action_12
0x3247 0x00  User_Fault_Action_13
0x3248 0x00  User_Fault_Action_14
0x3249 0x00  User_Fault_Action_15
0x324A 0x00  User_Fault_Action_16
```


Downloaded from www.Manualslib.com manuals search engine

VCL FUNCTIONS SPECIFIC TO 1232E/SE, 1234E/SE, 1236E/SE, AND 1238E CONTROLLERS

Function descriptions are provided here for the functions that are unique to these controllers. They are presented in the same format that is used in the VCL Common Functions Manual for the common functions.

ENABLE_PRECHARGE()

This function is designed to precharge the capacitor bank before engaging a main contactor thereby preventing current surges and to protect controller internal components and main contactor tips. This function turns on the request for precharge of the capacitor bank from KSI.

When the precharge function is enabled, power will be supplied to the capacitor bank until the voltage is within the factory-set range of KSI, or the precharge time limit has expired, or the precharge resistor energy range has been exceeded. The current state of precharge is shown by the precharge variable (Precharge_State), which has the following values:

0 – Precharge has not yet been done.
1 – Precharge is in progress.
2 – Precharge has passed.
3 – Precharge has been aborted by the Disable_Precharge() function.
4 – Precharge has exceeded the precharge resistor energy limit.
5 – Precharge has exceeded the one-second time limit.

Syntax **`Enable_Precharge()`**

Parameters None.

Returns
0 – Precharge not enabled.
1 – Precharge successfully enabled.

Error Codes None.

Example `Enable_Precharge()`
This will attempt to precharge the capacitor bank.
Note: Use this function only when the precharge is under VCL control.

Downloaded from www.Manualslib.com manuals search engine

DISABLE_PRECHARGE()

This function is designed to abort the precharge function and clear any precharge fault. This function aborts the request for precharge of the capacitor bank from KSI. The resultant state of the precharge variable (Precharge_State) will be set to = 3 (for precharge aborted). The precharge states are:

0 – Precharge has not yet been done.
1 – Precharge is in progress.
2 – Precharge has passed.
3 – Precharge has been aborted by the Disable_Precharge() function.
4 – Precharge has exceeded the precharge resistor energy limit.
5 – Precharge has exceeded the one-second time limit.

Syntax **`Disable_Precharge()`**

Parameters None.

Returns
0 – Precharge not aborted.
1 – Precharge successfully aborted.

Error Codes None.

Example `Disable_Precharge()`
This will attempt to abort the precharge of the capacitor bank and will clear any precharge fault.

Downloaded from www.Manualslib.com manuals search engine

SET_DIGOUT()

This function turns on the selected digital output. The digital outputs are active low (On = driver on and pulled to ground, Off = open circuit at the pin).

Syntax **`Set_Digout(DigOut_ID)`**

Parameters

`DigOut_ID` is the digital output identification.

DigOut6 = Digital Output 6 (pin 19).

DigOut7 = Digital Output 7 (pin 20).

Returns

0 – Selected digital output not set.

1 – Selected digital output successfully set.

Error Codes

Bad_ID is returned when DigOut_ID is not in the range of DigOut6 to DigOut7.

Example `Set_Digout(DigOut6)`

This example will set Digital Output 6 (pin 19) On (active low, pulled to ground).

CLEAR_DIGOUT()

This function turns off the selected digital output. The digital outputs are active low (On = driver on and pulled to ground, Off = open circuit at the pin).

Syntax **`Clear_Digout(DigOut_ID)`**

Parameters

`DigOut_ID` is the digital output identification.

DigOut6 = Digital Output 6 (pin 19).

DigOut7 = Digital Output 7 (pin 20).

Returns

0 – Selected digital output not cleared.

1 – Selected digital output successfully cleared.

Error Codes

Bad_ID is returned when DigOut_ID is not in the range of DigOut6 to DigOut7.

Example `Clear_Digout(DigOut6)`

This example will set Digital Output 6 (pin 19) Off (open circuit).

Downloaded from www.Manualslib.com manuals search engine

ENABLE_EMER_REV()

This function is used to engage emergency reverse using VCL. The EMR Type parameter must be set to = 1 in order for the Enable_Emer_Rev() function to operate. If the system emergency reverse state is enabled (EMR_State bit variable = On), the emergency reverse function will operate according to the Emergency Reverse parameter settings; see page 68. To view the current emergency reverse state, see Monitor » Inputs: Emer Rev on the 1313/1314 programmer.

When the EMR_Type is set to = 1 and neither the Enable_Emer_Rev() nor the Disable_Emer_Rev() function has been called, the state for emergency reverse is Off (EMR_State bit variable = Off).

Syntax **`Enable_Emer_Rev()`**

Parameters None.

Returns

0 – Emergency reverse not enabled.
1 – Emergency reverse successfully enabled.

Error Codes None.

Example `Enable_Emer_Rev()`
This will enable the emergency reverse function.

DISABLE_EMER_REV()

This function is used to disengage emergency reverse using VCL. The EMR Type parameter must be set to = 1 in order for the Disable_Emer_Rev() function to operate. If the system emergency reverse state is disabled (EMR_State bit variable = Off), the emergency reverse function will stop operating and normal motor control function will resume (including an HPD/SRO check if the HPD/SRO Enable parameter is set to On). To view the current emergency reverse state, see Monitor » Inputs: Emer Rev on the 1313/1314 programmer.

When the EMR_Type is set to = 1 and neither the Enable_Emer_Rev() nor the Disable_Emer_Rev() function has been called, the state for emergency reverse is Off (EMR_State bit variable = Off).

Syntax **`Disable_Emer_Rev()`**

Parameters None.

Returns

0 – Emergency reverse not disabled.
1 – Emergency reverse successfully disabled.

Error Codes None.

Example `Disable_Emer_Rev()`
This will disable the emergency reverse function.

Downloaded from www.Manualslib.com manuals search engine

SET_INTERLOCK()

This function is used to engage the system interlock using VCL. The Interlock Type parameter (page 50) must be set to = 1 in order for the Set_Interlock() function to operate. If the system interlock is set (Interlock_State bit variable = On), the throttle input signal is allowed to pass along the throttle chain; see Figure 15. Additionally, if the main contactor is used (Main Enable parameter = On), setting the interlock will request the main closed state from the main contactor state machine. To view the current interlock state, see the Monitor » Inputs: Interlock. To view the current main contactor state, see Monitor » Controller: Main State.

When the Interlock_Type is set to = 1 and neither the Set_Interlock() nor the Clear_Interlock() function has been called, the state for the interlock is Off (Interlock_State bit variable = Off).

Syntax **`Set_Interlock()`**

Parameters None.

Returns

0 – Interlock not set.
1 – Interlock successfully set.

Error Codes None.

Example `Set_Interlock()`
This will engage the system interlock.

CLEAR_INTERLOCK()

This function is used to disengage the system interlock using VCL. The Interlock Type parameter must be set to = 1 in order for the Set_Interlock() function to operate. If the system interlock is cleared (Interlock_State bit variable = Off), the throttle input signal is not allowed to pass along the throttle chain; see Figure 15. Additionally, if the main contactor is used (Main Enable parameter = On), clearing the interlock will request the main open state from the main contactor state machine. To view the current interlock state, see Monitor » Inputs: Interlock. To view the current main contactor state, see Monitor » Controller: Main State.

When the Interlock_Type is set to = 1 and neither the Set_Interlock() nor Clear_Interlock() function has been called, the default state for the interlock is Off (Interlock_State bit variable = Off).

Syntax **`Clear_Interlock()`**

Parameters None.

Returns

0 – Interlock not cleared.
1 – Interlock successfully cleared.

Error Codes None.

Example `Clear_Interlock()`
This will disengage the system interlock.

Downloaded from www.Manualslib.com manuals search engine

SETUP_POT_FAULTS()

This function sets the upper and lower wiper fault voltages for a given pot input and sets the replacement wiper voltage value that will be used if there is a fault. The valid range for the function parameters is 0–6.25 V (0–400 counts). If this function is not run, the default thresholds depend on the Throttle Type (or Brake Type) parameter setting; see table below. If the Throttle Type = 5 (or Brake Type = 5), the VCL function Setup_Pot will determine what fault thresholds are used.

THROTTLE TYPE	LOW FAULT THRESHOLD	HIGH FAULT THRESHOLD
1	0.1 V	5.5 V
2	none	5.5 V
3	0.1 V	5.5 V
4	0.1 V	5.5 V
5 (ONE_WIRE)	none	5.5 V
5 (TWO_WIRE)	0.1 V	5.5 V
5 (THREE_WIRE)	0.1 V	5.5 V

Syntax **`Setup_Pot_Faults(Pot_ID,Low_Fault,High_Fault, Fault_Value)`**

Parameters

`Pot_ID` identifies the throttle whose fault limits are being set:

THROTTLE_POT

BRAKE_POT

`Low_Fault`

Specifies the lower threshold voltage limit.

Scaling: 1 V = 64 counts.

`High_Fault`

Specifies the upper threshold voltage limit.

Scaling: 1 V = 64 counts.

`Fault_Value`

The value that is used for the pot input when there is a fault (0–32767).

Scaling: ±32767 = ±100%.

Returns

0 – Setup did not execute.

1 – Setup successful.

Error Codes

Bad_ID is returned when an incorrect pot ID is used.

Param_Range is returned when the voltage value is not within range.

Example `Setup_Pot_Faults(THROTTLE_POT,19,320,4000)`

For the throttle pot, this will set the lower pot voltage at 0.3 volts (19/64) and the upper pot voltage at 5.0 volts (320/64). When there is a pot fault, the value of 4000 will be used. That is 4000/32767 of the full output, or roughly 12%.

Downloaded from www.Manualslib.com manuals search engine

START_PUMP()

This function is used to turn on the pump lift contactor (pin 4). If the parameter Drivers » Driver3 » Contactor Enable = On (VCL HydraulicContactorEnable bit variable = On), the VCL function Start_Pump() will turn on the pump lift contactor (Driver 3).

When HydraulicContactorEnable = On and neither Start_Pump() nor Stop_Pump() has been called, the pump lift contactor is Off.

Syntax **`Start_Pump()`**

Parameters None.

Returns

0 – Pump start function not enabled.
1 – Pump start function successfully enabled.

Error Codes None.

Example `Start_Pump()`

This will turn on the pump lift contactor.

STOP_PUMP()

This function is used to turn off the pump lift contactor (pin 4). If the parameter Drivers » Driver3 » Contactor Enable = On (VCL HydraulicContactorEnable bit variable = On), the VCL function Start_Pump() will turn off the pump lift contactor (Driver 3).

When HydraulicContactorEnable = On and neither Start_Pump() nor Stop_Pump() has been called, the pump lift contactor is Off.

Syntax **`Stop_Pump()`**

Parameters None.

Returns

0 – Pump stop function not enabled.
1 – Pump stop function successfully enabled.

Error Codes None.

Example `Stop_Pump()`

This will turn off the pump lift contactor.

Downloaded from www.Manualslib.com manuals search engine

AUTOMATE_FREQUENCY_OUTPUT()

This function sets up the PD Driver (pin 2) PWM output to yield a frequency proportional to the input variable at an execution rate of 16 ms. This output can be used to drive an electronic speedometer or tachometer.

An additional VCL variable called Frequency_Output_Duty_Cycle works in conjunction with the Automate_Frequency_Output() function to modify the duty cycle of the output. The default value of Frequency_Output_Duty_Cycle is 50% (or 16384).

Syntax **`Automate_Frequency_Output()`**

Parameters

`@Source`	Index of source value to be the input.
`MinInput`	Holds the minimum value for the input.
`MaxInput`	Holds the maximum value for the input.
`MinOutput`	Holds the minimum value for the output in Hz.
`MaxOutput`	Holds the maximum value for the output in Hz.

Note: The frequency range is 0–4000 Hz, with 4 Hz being the minimum active frequency, and 0–3 Hz = Off.

Returns

0 – PWM not automated.
1 – PWM automated.

Error Codes

Param_Range is returned when a parameter is out of range.
PT_Range is returned when the Parameter Table Index is out of range.

Example

To set up the PD Driver to output 500–1500 Hz (at duty cycle = 25%) for motor speed in the range 100–4000 rpm:

```
Frequency_Output_Duty_Cycle = 8192   ;set duty cycle = 25%

Automate_Frequency_Output(@ABS_Motor_Speed,100,4000,500,1500)
```


Downloaded from www.Manualslib.com manuals search engine

9 DIAGNOSTICS AND TROUBLESHOOTING

These controllers detect a wide variety of faults or error conditions. Faults can be detected by the operating system or by the VCL code. This section describes the faults detected by the operating system.

Faults detected by VCL code (faults 51–67 in Table 6) cannot be defined here as they will vary from application to application. Refer to the appropriate OEM documentation for information on these faults.

DIAGNOSTICS

Diagnostics information can be obtained in either of two ways: (1) by reading the display on a 1313 handheld or 1314 PC programmer or (2) by observing the fault codes issued by the Status LEDs. See Table 5 for a summary of LED display formats.

The 1313/1314 programmer will display all faults that are currently set as well as a history of the faults that have been set since the history log was last cleared. The programmer displays the faults by name.

The pair of LEDs built into the controller (one red, one yellow) produce flash codes displaying all the currently set faults in a repeating cycle. Each code consists of two digits. The red LED flashes once to indicate that the first digit of the code will follow; the yellow LED then flashes the appropriate number of times for the first digit. The red LED flashes twice to indicate that the second digit of the code will follow; the yellow LED flashes the appropriate number of times for the second digit.

Example: Battery Undervoltage (code 23).

In the Fault menu of the 1313/1314 programmer, the words **Undervoltage Cutback** will be displayed; the real-time battery voltage is displayed in the Monitor menu ("Keyswitch Voltage").

The controller's two LEDs will display this repeating pattern:

RED	YELLOW	RED	YELLOW
*	* *	* *	* * *
(first digit)	(2)	(second digit)	(3)

The numerical codes used by the yellow LED are listed in the troubleshooting chart (Table 5), which also lists possible fault causes and describes the conditions that set and clear each fault.

Downloaded from www.Manualslib.com manuals search engine

Summary of LED display formats

The two LEDs have four different display modes, indicating the type of information they are providing.

Table 5 TYPES OF LED DISPLAY

DISPLAY	STATUS
Neither LED illuminated	Controller is not powered on; or vehicle has dead battery; or severe damage.
Yellow LED flashing	Controller is operating normally.
Yellow and red LEDs both on solid	Controller is in Flash program mode.
Red LED on solid	No software loaded, or an internal hardware fault detected by the Supervisor or Primary microprocessor. Cycle KSI to clear. Reload software or replace controller if necessary.
Red LED and yellow LED flashing alternately	Controller has detected a fault. 2-digit code flashed by yellow LED identifies the specific fault; one or two flashes by red LED indicate whether first or second code digit will follow.

TROUBLESHOOTING

The troubleshooting chart, Table 6, provides the following information on all the controller faults:

- fault code
- fault name as displayed on the programmer's LCD
- the effect of the fault
- possible causes of the fault
- fault *set* conditions
- fault *clear* conditions.

Whenever a fault is encountered and no wiring or vehicle fault can be found, shut off KSI and turn it back on to see if the fault clears. If it does not, shut off KSI and remove the 35-pin connector. Check the connector for corrosion or damage, clean it if necessary, and re-insert it.

Downloaded from www.Manualslib.com manuals search engine

Table 6 TROUBLESHOOTING CHART

CODE	PROGRAMMER LCD DISPLAY / *EFFECT OF FAULT*	POSSIBLE CAUSE	SET/CLEAR CONDITIONS
12	Controller Overcurrent *ShutdownMotor; ShutdownMainContactor; ShutdownEMBrake; ShutdownThrottle; FullBrake.*	1. External short of phase U,V, or W motor connections. 2. Motor parameters are mis-tuned. 3. Controller defective. 4. Speed encoder noise problems.	*Set:* Phase current exceeded the current measurement limit. *Clear:* Cycle KSI.
13	Current Sensor Fault *ShutdownMotor; ShutdownMainContactor; ShutdownEMBrake; ShutdownThrottle; FullBrake.*	1. Leakage to vehicle frame from phase U, V, or W (short in motor stator). 2. Controller defective.	*Set:* Controller current sensors have invalid offset reading. *Clear:* Cycle KSI.
14	Precharge Failed *ShutdownMotor; ShutdownMainContactor; ShutdownEMBrake; ShutdownThrottle; FullBrake.*	1. See Monitor menu » Battery: Capacitor Voltage. 2. External load on capacitor bank (B+ connection terminal) that prevents the capacitor bank from charging.	*Set:* Precharge failed to charge the capacitor bank to the KSI voltage. *Clear:* Cycle Interlock input or use VCL function *Enable_Precharge()*.
15	Controller Severe Undertemp *ShutdownMotor; ShutdownMainContactor; ShutdownEMBrake; ShutdownThrottle; FullBrake.*	1. See Monitor menu » Controller: Temperature. 2. Controller is operating in an extreme environment.	*Set:* Heatsink temperature below -40°C. *Clear:* Bring heatsink temperature above -40°C, and cycle interlock or KSI.
16	Controller Severe Overtemp *ShutdownMotor; ShutdownMainContactor; ShutdownEMBrake; ShutdownThrottle; FullBrake.*	1. See Monitor menu » Controller: Temperature. 2. Controller is operating in an extreme environment. 3. Excessive load on vehicle.	*Set:* Heatsink temperature above +95°C. *Clear:* Bring heatsink temperature below +95°C, and cycle interlock or KSI.
17	Severe B+ Undervoltage *Reduced drive torque.*	1. Battery Menu parameters are misadjusted. 2. Non-controller system drain on battery. 3. Battery resistance too high. 4. Battery disconnected while driving. 5. See Monitor menu » Battery: Capacitor Voltage. 6. Blown B+ fuse or main contactor did not close.	*Set:* Capacitor bank voltage dropped below the Severe Undervoltage limit (see page 64) with FET bridge enabled. *Clear:* Bring capacitor voltage above Severe Undervoltage limit.
17	Severe KSI Undervoltage *If below brownout voltage, motor current is switched off and reset may occur.*	1. See Monitor menu » Battery: Keyswitch Voltage. 2. Non-controller system drain on low power circuit voltage. 3. Resistance in low power circuit too high. 4. Low power circuit power source disconnected while driving. 5. Blown fuse.	*Set:* KSI voltage dropped below 8.4 V (Brownout occurs at 8.0 V.) *Clear:* Bring KSI voltage above 8.4 V.

Downloaded from www.Manualslib.com manuals search engine

Table 6 TROUBLESHOOTING CHART, cont'd

CODE	PROGRAMMER LCD DISPLAY / *EFFECT OF FAULT*	POSSIBLE CAUSE	SET/CLEAR CONDITIONS
18	Severe B+ Overvoltage *ShutdownMotor; ShutdownMainContactor; ShutdownEMBrake; ShutdownThrottle; FullBrake.*	1. See Monitor menu » Battery: Capacitor Voltage. 2. Battery menu parameters are misadjusted. 3. Battery resistance too high for given regen current. 4. Battery disconnected while regen braking.	*Set:* Capacitor bank voltage exceeded the Severe Overvoltage limit (see page 64) with FET bridge enabled. *Clear:* Bring capacitor voltage below Severe Overvoltage limit, and then
22	Controller Overtemp Cutback *Reduced drive and brake torque.*	1. See Monitor menu » Controller: Temperature. 2. Controller is performance-limited at this temperature. 3. Controller is operating in an extreme environment. 4. Excessive load on vehicle. 5. Improper mounting of controller.	*Set:* Heatsink temperature exceeded 85°C. *Clear:* Bring heatsink temperature below 85°C.
23	B+ Undervoltage Cutback *Reduced drive torque.*	1. Normal operation. Fault shows that the batteries need recharging. Controller is performance limited at this voltage. 2. Battery parameters are misadjusted. 3. Non-controller system drain on battery. 4. Battery resistance too high. 5. Battery disconnected while driving. 6. See Monitor menu » Battery: Capacitor Voltage. 7. Blown B+ fuse or main contactor did not close.	*Set:* Capacitor bank voltage dropped below the Undervoltage limit (see page 64) with the FET bridge enabled. *Clear:* Bring capacitor voltage above the Undervoltage limit.
24	B+ Overvoltage Cutback *Reduced brake torque.* *Note: This fault is declared only when the controller is running in regen.*	1. Normal operation. Fault shows that regen braking currents elevated the battery voltage during regen braking. Controller is performance limited at this voltage. 2. Battery parameters are misadjusted. 3. Battery resistance too high for given regen current. 4. Battery disconnected while regen braking. 5. See Monitor menu » Battery: Capacitor Voltage.	*Set:* Capacitor bank voltage exceeded the Overvoltage limit (see page 64) with the FET bridge enabled. *Clear:* Bring capacitor voltage below the Overvoltage limit.
25	+5V Supply Failure *None, unless a fault action is programmed in VCL.*	1. External load impedance on the +5V supply (pin 26) is too low. 2. See Monitor menu » outputs: 5 Volts and Ext Supply Current.	*Set:* +5V supply (pin 26) outside the +5V±10% range. *Clear:* Bring voltage within range.
26	Digital Out 6 Open/Short *Digital Output 6 driver will not turn on.*	1. External load impedance on Digital Output 6 driver (pin 19) is too low.	*Set:* Digital Output 6 (pin 19) current exceeded 15 mA. *Clear:* Remedy the overcurrent cause and use the VCL function *Set_DigOut()* to turn the driver on again.

Downloaded from www.Manualslib.com manuals search engine

Table 6 TROUBLESHOOTING CHART, cont'd

CODE	PROGRAMMER LCD DISPLAY / *EFFECT OF FAULT*	POSSIBLE CAUSE	SET/CLEAR CONDITIONS
27	Digital Out 7 Open/Short *Digital Output 7 driver will not turn on.*	1. External load impedance on Digital Output 7 driver (pin 20) is too low.	*Set:* Digital Output 7 (pin 20) current exceeded 15 mA. *Clear:* Remedy the overcurrent cause and use the VCL function *Set_DigOut()* to turn the driver on again.
28	Motor Temp Hot Cutback *Reduced drive torque.*	1. Motor temperature is at or above the programmed Temperature Hot setting, and the current is being cut back. 2. Motor Temperature Control Menu parameters are mis-tuned. 3. See Monitor menu » Motor: Temperature and » Inputs: Analog2. 4. If the application doesn't use a motor thermistor, Temp Compensation and Temp Cutback should be programmed Off.	*Set:* Motor temperature is at or above the Temperature Hot parameter setting. *Clear:* Bring the motor temperature within range.
29	Motor Temp Sensor Fault *MaxSpeed reduced (LOS, Limited Operating Strategy), and motor temperature cutback disabled.*	1. Motor thermistor is not connected properly. 2. If the application doesn't use a motor thermistor, Motor Temp Sensor Enable should be programmed Off. 3. See Monitor menu » Motor: Temperature and » Inputs: Analog2.	*Set:* Motor thermistor input (pin 8) is at the voltage rail (0 or 10V). *Clear:* Bring the motor thermistor input voltage within range.
31	Coil1 Driver Open/Short *ShutdownDriver1.*	1. Open or short on driver load. 2. Dirty connector pins. 3. Bad crimps or faulty wiring.	*Set:* Driver 1 (pin 6) is either open or shorted. This fault can be set only when Main Enable = Off. *Clear:* Correct open or short, and cycle driver.
31	Main Open/Short *ShutdownMotor; ShutdownMainContactor; ShutdownEMBrake; ShutdownThrottle; FullBrake.*	1. Open or short on driver load. 2. Dirty connector pins. 3. Bad crimps or faulty wiring.	*Set:* Main contactor driver (pin 6) is either open or shorted. This fault can be set only when Main Enable = On. *Clear:* Correct open or short, and cycle driver
32	Coil2 Driver Open/Short *ShutdownDriver2.*	1. Open or short on driver load. 2. Dirty connector pins. 3. Bad crimps or faulty wiring.	*Set:* Driver 2 (pin 5) is either open or shorted. This fault can be set only when EM Brake Type = 0. *Clear:* Correct open or short, and cycle driver.
32	EMBrake Open/Short *ShutdownEMBrake; ShutdownThrottle; FullBrake.*	1. Open or short on driver load. 2. Dirty connector pins. 3. Bad crimps or faulty wiring.	*Set:* Electromagnetic brake driver (pin 5) is either open or shorted. This fault can be set only when EM Brake Type >0. *Clear:* Correct open or short, and cycle driver.
33	Coil3 Driver Open/Short *ShutdownDriver3.*	1. Open or short on driver load. 2. Dirty connector pins. 3. Bad crimps or faulty wiring.	*Set:* Driver 3 (pin 4) is either open or shorted. *Clear:* Correct open or short, and cycle driver.
34	Coil4 Driver Open/Short *ShutdownDriver4.*	1. Open or short on driver load. 2. Dirty connector pins. 3. Bad crimps or faulty wiring.	*Set:* Driver 4 (pin 3) is either open or shorted. *Clear:* Correct open or short, and cycle driver.

Downloaded from www.Manualslib.com manuals search engine

Table 6 TROUBLESHOOTING CHART, cont'd

CODE	PROGRAMMER LCD DISPLAY / *EFFECT OF FAULT*	POSSIBLE CAUSE	SET/CLEAR CONDITION
35	PD Open/Short *ShutdownPD.*	1. Open or short on driver load. 2. Dirty connector pins. 3. Bad crimps or faulty wiring.	*Set:* Proportional driver (pin 2) is either open or shorted. *Clear:* Correct open or short, and cycle driver.
36	Encoder Fault *ShutdownEMBrake; ShutdownThrottle.*	1. Motor encoder failure. 2. Bad crimps or faulty wiring. 3. See Monitor menu » Motor: Motor RPM.	*Set:* Motor encoder phase failure detected. *Clear:* Cycle KSI.
36	Sin/Cos Sensor Fault *ShutdownEMBrake; ShutdownThrottle.*	1. Sin/cos sensor failure. 2. Bad crimps or faulty wiring. 3. See Monitor menu » Motor: Motor RPM.	*Set:* Motor Sin/Cos sensor failure detected. *Clear:* Cycle KSI.
37	Motor Open *ShutdownMotor; ShutdownMainContactor; ShutdownEMBrake; ShutdownThrottle; FullBrake.*	1. Motor phase is open. 2. Bad crimps or faulty wiring.	*Set:* Motor phase U, V, or W detected open. *Clear:* Cycle KSI.
38	Main Contactor Welded *ShutdownMotor; ShutdownMainContactor; ShutdownEMBrake; ShutdownThrottle; FullBrake.*	1. Main contactor tips are welded closed. 2. Motor phase U or V is disconnected or open. 3. An alternate voltage path (such as an external precharge resistor) is providing a current to the capacitor bank (B+ connection terminal).	*Set:* Just prior to the main contactor closing, the capacitor bank voltage (B+ connection terminal) was loaded for a short time and the voltage did not discharge. *Clear:* Cycle KSI
39	Main Contactor Did Not Close *ShutdownMotor; ShutdownMainContactor; ShutdownEMBrake; ShutdownThrottle; FullBrake.*	1. Main contactor did not close. 2. Main contactor tips are oxidized, burned, or not making good contact. 3. External load on capacitor bank (B+ connection terminal) that prevents capacitor bank from charging. 4. Blown B+ fuse.	*Set:* With the main contactor commanded closed, the capacitor bank voltage (B+ connection terminal) did not charge to B+. *Clear:* Cycle KSI.
41	Throttle Wiper High *ShutdownThrottle.*	1. See Monitor menu » Inputs: Throttle Pot. 2. Throttle pot wiper voltage too high.	*Set:* Throttle pot wiper (pin 16) voltage is higher than the high fault threshold (can be changed with the VCL function *Setup_Pot_Faults()*). *Clear:* Bring throttle pot wiper voltage below the fault threshold.
42	Throttle Wiper Low *ShutdownThrottle.*	1. See Monitor menu » Inputs: Throttle Pot. 2. Throttle pot wiper voltage too low.	*Set:* Throttle pot wiper (pin 16) voltage is lower than the low fault threshold (can be changed with the VCL function *Setup_Pot_Faults()*). *Clear:* Bring throttle pot wiper voltage above the fault threshold.

Downloaded from www.Manualslib.com manuals search engine

Table 6 TROUBLESHOOTING CHART, cont'd

CODE	PROGRAMMER LCD DISPLAY / *EFFECT OF FAULT*	POSSIBLE CAUSE	SET/CLEAR CONDITIONS
43	Pot2 Wiper High *FullBrake.*	1. See Monitor menu » Inputs: Pot2 Raw. 2. Pot2 wiper voltage too high.	*Set:* Pot2 wiper (pin 17) voltage is higher than the high fault threshold (can be changed with the VCL function *Setup_Pot_Faults()*). *Clear:* Bring Pot2 wiper voltage below the fault threshold.
44	Pot2 Wiper Low *FullBrake.*	1. See Monitor menu » Inputs: Pot2 Raw. 2. Pot2 wiper voltage too low.	*Set:* Pot2 wiper (pin 17) voltage is lower than the low fault threshold (can be changed with the VCL function *Setup_Pot_Faults()*). *Clear:* Bring Pot2 wiper voltage above the fault threshold.
45	Pot Low OverCurrent *ShutdownThrottle; FullBrake.*	1. See Monitor menu » Outputs: Pot Low. 2. Combined pot resistance connected to pot low is too low.	*Set:* Pot low (pin 18) current exceeds 10mA. *Clear:* Clear pot low overcurrent condition and cycle KSI.
46	EEPROM Failure *ShutdownMotor; ShutdownMainContactor; ShutdownEMBrake; ShutdownThrottle; ShutdownInterlock; ShutdownDriver1; ShutdownDriver2; ShutdownDriver3; ShutdownDriver4; ShutdownPD; FullBrake.*	1. Failure to write to EEPROM memory. This can be caused by EEPROM memory writes initiated by VCL, by the CAN bus, by adjusting parameters with the programmer, or by loading new software into the controller.	*Set:* Controller operating system tried to write to EEPROM memory and failed. *Clear:* Download the correct software (OS) and matching parameter default settings into the controller and cycle KSI.
47	HPD/Sequencing Fault *ShutdownThrottle.*	1. KSI, interlock, direction, and throttle inputs applied in incorrect sequence. 2. Faulty wiring, crimps, or switches at KSI, interlock, direction, or throttle inputs. 3. See Monitor menu » Inputs.	*Set:* HPD (High Pedal Disable) or sequencing fault caused by incorrect sequence of KSI, interlock, direction, and throttle inputs. *Clear:* Reapply inputs in correct sequence.
47	Emer Rev HPD *ShutdownThrottle; ShutdownEMBrake.*	1. Emergency Reverse operation has concluded, but the throttle, forward and reverse inputs, and interlock have not been returned to neutral.	*Set:* At the conclusion of Emergency Reverse, the fault was set because various inputs were not returned to neutral. *Clear:* If EMR_Interlock = On, clear the interlock, throttle, and direction inputs. If EMR_Interlock = Off, clear the throttle and direction inputs.
48	Following Error Fault *ShutdownMotor; ShutdownMainContactor; ShutdownEMBrake; ShutdownThrottle; ShutdownInterlock; ShutdownDriver1; ShutdownDriver2; ShutdownDriver3; ShutdownDriver4; ShutdownPD; FullBrake.*	1. The Following Error Limit has been exceeded for the Following Error Time. 2. Incorrect or overly restrictive Following Error Limit and Following Error Time parameter settings. 3. Motor or drivetrain rotation obstruction or degradation.	*Set:* The Following Error Limit has been exceeded for the Following Error Time. *Clear:* Cycle KSI.

Downloaded from www.Manualslib.com manuals search engine

Table 6 TROUBLESHOOTING CHART, cont'd

CODE	PROGRAMMER LCD DISPLAY / *EFFECT OF FAULT*	POSSIBLE CAUSE	SET/CLEAR CONDITIONS
49	Parameter Change Fault *ShutdownMotor; ShutdownMainContactor; ShutdownEMBrake; ShutdownThrottle; FullBrake.*	1. This is a safety fault caused by a change in certain parameter settings so that the vehicle will not operate until KSI is cycled. For example, if a user changes the Throttle Type this fault will appear and require cycling KSI before the vehicle can operate.	*Set:* Adjustment of a parameter setting that requires cycling of KSI. *Clear:* Cycle KSI.
51–67	OEM Faults *(See OEM documentation.)*	1. These faults can be defined by the OEM and are implemented in the application-specific VCL code. See OEM documentation.	*Set:* See OEM documentation. *Clear:* See OEM documentation.
68	VCL Run Time Error *ShutdownMotor; ShutdownMainContactor; ShutdownEMBrake; ShutdownThrottle; ShutdownInterlock; ShutdownDriver1; ShutdownDriver2; ShutdownDriver3; ShutdownDriver4; ShutdownPD; FullBrake.*	1. VCL code encountered a runtime VCL error. 2. See Monitor menu » Controller: VCL Error Module and VCL Error. This error can then be compared to the runtime VCL module ID and error code definitions found in the specific OS system information file.	*Set:* Runtime VCL code error condition. *Clear:* Edit VCL application software to fix this error condition; flash the new compiled software and matching parameter defaults; cycle KSI.
69	External Supply Out of Range *None, unless a fault action is programmed in VCL.*	1. External load on the 5V and 12V supplies draws either too much or too little current. 2. Fault Checking Menu parameters Ext Supply Max and Ext Supply Min are mis-tuned. 3. See Monitor menu » Outputs: Ext Supply Current.	*Set:* The external supply current (combined current used by the 5V supply [pin 26] and 12V supply [pin 25]) is either greater than the upper current threshold or lower than the lower current threshold. The two thresholds are defined by the External Supply Max and External Supply Min parameter settings (page 54). *Clear:* Bring the external supply current within range.
71	OS General *ShutdownMotor; ShutdownMainContactor; ShutdownEMBrake; ShutdownThrottle; ShutdownInterlock; ShutdownDriver1; ShutdownDriver2; ShutdownDriver3; ShutdownDriver4; ShutdownPD; FullBrake.*	1. Internal controller fault.	*Set:* Internal controller fault detected. *Clear:* Cycle KSI.
72	PDO Timeout *ShutdownThrottle; CAN NMT State set to Pre-operational.*	1. Time between CAN PDO messages received exceeded the PDO Timeout Period.	*Set:* Time between CAN PDO messages received exceeded the PDO Timeout Period. *Clear:* Cycle KSI or receive CAN NMT message.

Downloaded from www.Manualslib.com manuals search engine

Table 6 TROUBLESHOOTING CHART, cont'd

CODE	PROGRAMMER LCD DISPLAY / *EFFECT OF FAULT*	POSSIBLE CAUSE	SET/CLEAR CONDITIONS
73	Stall Detected *ShutdownEMBrake; ShutdownThrottle; Control Mode changed to LOS (Limited Operating Strategy).*	1. Stalled motor. 2. Motor encoder failure. 3. Bad crimps or faulty wiring. 4. Problems with power supply for the motor encoder. 5. See Monitor menu » Motor: Motor RPM.	*Set:* No motor encoder movement detected. *Clear:* Either cycle KSI, or detect valid motor encoder signals while operating in LOS mode and return Throttle Command = 0 and Motor RPM = 0.
74	Fault On Other Traction Controller	Dual Drive fault: see Dual Drive manual.	
75	Dual Severe Fault	Dual Drive fault: see Dual Drive manual.	
77	Supervisor Fault *ShutdownMotor; ShutdownMainContactor; ShutdownEMBrake; ShutdownThrottle; ShutdownInterlock; ShutdownDriver1; ShutdownDriver2; ShutdownDriver3; ShutdownDriver4; ShutdownPD; FullBrake.*	1. The Supervisor has detected a mismatch in redundant readings. 2. Internal damage to Supervisor microprocessor. 3. Switch inputs allowed to be within upper and lower thresholds for over 100 milliseconds.	*Set:* Mismatched redundant readings; damaged Supervisor; illegal switch inputs. *Clear:* Check for noise or voltage drift in all switch inputs; check connections; cycle KSI.
78	Supervisor Incompatible *ShutdownMotor; ShutdownMainContactor; ShutdownEMBrake; ShutdownThrottle; ShutdownInterlock; ShutdownDriver1; ShutdownDriver2; ShutdownDriver3; ShutdownDriver4; ShutdownPD; FullBrake.*	1. The main OS is not compatible with the Supervisor OS.	*Set:* Incompatible software. *Clear:* Load properly matched OS code or update the Supervisor code; cycle KSI.
82	Bad Calibrations *ShutdownMotor; ShutdownMainContactor; ShutdownEMBrake; ShutdownThrottle; FullBrake.*	1. Internal controller fault.	*Set:* Internal controller fault detection. *Clear:* Cycle KSI.
83	Driver Supply *ShutdownMotor; ShutdownMainContactor; ShutdownEMBrake; ShutdownThrottle; FullBrake.*	1. Internal controller fault in the voltage supply for the driver circuits.	*Set:* Internal controller fault detection. *Clear:* Cycle KSI.

Downloaded from www.Manualslib.com manuals search engine

Table 6 TROUBLESHOOTING CHART, cont'd

CODE	PROGRAMMER LCD DISPLAY / *EFFECT OF FAULT*	POSSIBLE CAUSE	SET/CLEAR CONDITIONS
87	Motor Characterization Fault *ShutdownMotor; ShutdownMainContactor; ShutdownEMBrake; ShutdownThrottle; FullBrake.*	1. Motor characterization failed during characterization process. See Monitor menu » Controller: Motor Characterization Error for cause: 0=none 1=encoder signal seen, but step size not determined; set Encoder Step Size manually 2=motor temp sensor fault 3=motor temp hot cutback fault 4= controller overtemp cutback fault 5=controller undertemp cutback fault 6=undervoltage cutback fault 7=severe overvoltage fault 8=encoder signal not seen, or one or both channels missing 9=motor parameters out of characterization range.	*Set:* Motor characterization failed during the motor characterization process. *Clear:* Correct fault; cycle KSI.
88	Encoder Pulse Count Fault *ShutdownMotor; ShutdownMainContactor; ShutdownEMBrake; ShutdownThrottle; ShutdownInterlock; ShutdownDriver1; ShutdownDriver2; ShutdownDriver3; ShutdownDriver4; ShutdownPD; FullBrake.*	1. Encoder Steps parameter does not match the actual motor encoder.	*Set:* Motor lost IFO control and accelerated without throttle command. *Clear:* Ensure the Encoder Steps parameter matches the actual encoder; cycle KSI.
89	Motor Type Fault *ShutdownMotor; ShutdownMainContactor; ShutdownEMBrake; ShutdownThrottle; FullBrake.*	1. The Motor_Type parameter value is out of range.	*Set:* Motor_Type parameter is set to an illegal value. *Clear:* Set Motor_Type to correct value and cycle KSI.
91	VCL/OS Mismatch *ShutdownMotor; ShutdownMainContactor; ShutdownEMBrake; ShutdownThrottle; ShutdownInterlock; ShutdownDriver1; ShutdownDriver2; ShutdownDriver3; ShutdownDriver4; ShutdownPD; FullBrake.*	1. The VCL software in the controller does not match the OS software in the controller.	*Set:* VCL and OS software do not match; when KSI cycles, a check is made to verify that they match and a fault is issued when they do not. *Clear:* Download the correct VCL and OS software into the controller.

Downloaded from www.Manualslib.com manuals search engine

Table 6 TROUBLESHOOTING CHART, cont'd

CODE	PROGRAMMER LCD DISPLAY / *EFFECT OF FAULT*	POSSIBLE CAUSE	SET/CLEAR CONDITIONS
92	EM Brake Failed to Set *ShutdownEMBrake; ShutdownThrottle.* *Position Hold is engaged when Interlock=On.*	1. Vehicle movement sensed after the EM Brake has been commanded to set. 2. EM Brake will not hold the motor from rotating.	*Set:* After the EM Brake was commanded to set and time has elapsed to allow the brake to fully engage, vehicle movement has been sensed. *Clear:* Activate the throttle.
93	Encoder LOS (Limited Operating Strategy) *Enter LOS control mode.*	1. Limited Operating Strategy (LOS) control mode has been activated, as a result of either an Encoder Fault (Code 36) or a Stall Detect Fault (Code 73). 2. Motor encoder failure. 3. Bad crimps or faulty wiring. 4. Vehicle is stalled.	*Set:* Encoder Fault (Code 36) or Stall Detect Fault (Code 73) was activated, and Brake or Interlock has been applied to activate LOS control mode, allowing limited motor control. *Clear:* Cycle KSI **or**, if LOS mode was activated by the Stall Fault, clear by ensuring encoder senses proper operation, Motor RPM = 0, and Throttle Command = 0.
94	EMR Rev Timeout *ShutdownEMBrake; ShutdownThrottle.*	1. Emergency Reverse was activated and concluded because the EMR Timeout timer has expired. 2. The emergency reverse input is stuck On.	*Set:* Emergency Reverse was activated and ran until the EMR Timeout timer expired. *Clear:* Turn the emergency reverse input Off.
98	Illegal Model Number *ShutdownMotor; ShutdownMainContactor; ShutdownEMBrake; ShutdownThrottle; FullBrake.*	1. Model_Number variable contains illegal value. 2. Software and hardware do not match. 3. Controller defective.	*Set:* Illegal Model_Number variable; when KSI cycles, a check is made to confirm a legal Model_Number, and a fault is issued if one is not found. *Clear:* Download appropriate software for your controller model.
99	Parameter Mismatch *ShutdownMotor; ShutdownMainContactor; ShutdownEMBrake; ShutdownThrottle; FullBrake.*	1. Dual Motor Enable parameter is set On and Control Mode Select parameter not set to 1 (Speed Mode Express) or 2 (Speed Mode). 2. Motor Technology and Feedback Type parameters do not match.	*Set:* When the Dual Drive software is enabled, the controller must be set to either Speed Mode Express or Speed Mode; otherwise this fault is set. Motor Techology=0 must be paired with Feedback Type=1, and Motor Technology=1 must be paired with Feedback Type=2; otherwise this fault is set. *Clear:* Adjust parameters to appropriate values and cycle KSI.

Downloaded from www.Manualslib.com manuals search engine

10 MAINTENANCE

There are no user serviceable parts in Curtis E/SE controllers. **No attempt should be made to open, repair, or otherwise modify the controller.** Doing so may damage the controller and will void the warranty.

It is recommended that the controller and connections be kept clean and dry and that the controller's fault history file be checked and cleared periodically.

CLEANING

Periodically cleaning the controller exterior will help protect it against corrosion and possible electrical control problems created by dirt, grime, and chemicals that are part of the operating environment and that normally exist in battery powered systems.

CAUTION

When working around any battery powered system, proper safety precautions should be taken. These include, but are not limited to: proper training, wearing eye protection, and avoiding loose clothing and jewelry.

Use the following cleaning procedure for routine maintenance. Never use a high pressure washer to clean the controller.

1. Remove power by disconnecting the battery.
2. Discharge the capacitors in the controller by connecting a load (such as a contactor coil) across the controller's **B+** and **B-** terminals.
3. Remove any dirt or corrosion from the power and signal connector areas. The controller should be wiped clean with a moist rag. Dry it before reconnecting the battery.
4. Make sure the connections are tight. Refer to Section 2, pages 6–7, for maximum tightening torque specifications for the battery and motor connections.

FAULT HISTORY

The 1313 handheld or 1314 PC programmer can be used to access the controller's fault history file. The programmer will read out all the faults the controller has experienced since the last time the fault history file was cleared. Faults such as contactor faults may be the result of loose wires; contactor wiring should be carefully checked. Faults such as overtemperature may be caused by operator habits or by overloading.

After a problem has been diagnosed and corrected, it is a good idea to clear the fault history file. This allows the controller to accumulate a new file of faults. By checking the new fault history file at a later date, you can readily determine whether the problem was indeed fixed.

Downloaded from www.Manualslib.com manuals search engine

APPENDIX A

VEHICLE DESIGN CONSIDERATIONS REGARDING ELECTROMAGNETIC COMPATIBILITY (EMC) AND ELECTROSTATIC DISCHARGE (ESD)

ELECTROMAGNETIC COMPATIBILITY (EMC)

Electromagnetic compatibility (EMC) encompasses two areas: emissions and immunity. *Emissions* are radio frequency (RF) energy generated by a product. This energy has the potential to interfere with communications systems such as radio, television, cellular phones, dispatching, aircraft, etc. *Immunity* is the ability of a product to operate normally in the presence of RF energy.

EMC is ultimately a system design issue. Part of the EMC performance is designed into or inherent in each component; another part is designed into or inherent in end product characteristics such as shielding, wiring, and layout; and, finally, a portion is a function of the interactions between all these parts. The design techniques presented below can enhance EMC performance in products that use Curtis motor controllers.

Emissions

Signals with high frequency content can produce significant emissions if connected to a large enough radiating area (created by long wires spaced far apart). Contactor drivers and the motor drive output from Curtis controllers can contribute to RF emissions. Both types of output are pulse width modulated square waves with fast rise and fall times that are rich in harmonics. (Note: contactor drivers that are not modulated will not contribute to emissions.) The impact of these switching waveforms can be minimized by making the wires from the controller to the contactor or motor as short as possible and by placing the wires near each other (bundle contactor wires with Coil Return; bundle motor wires separately).

For applications requiring very low emissions, the solution may involve enclosing the controller, interconnect wires, contactors, and motor together in one shielded box. Emissions can also couple to battery supply leads and throttle circuit wires outside the box, so ferrite beads near the controller may also be required on these unshielded wires in some applications. It is best to keep the noisy signals as far as possible from sensitive wires.

Immunity

Immunity to radiated electric fields can be improved either by reducing overall circuit sensitivity or by keeping undesired signals away from this circuitry. The controller circuitry itself cannot be made less sensitive, since it must accurately detect and process low level signals from sensors such as the throttle potentiometer. Thus immunity is generally achieved by preventing the external RF energy from coupling into sensitive circuitry. This RF energy can get into the controller circuitry via conducted paths and radiated paths.

Downloaded from www.Manualslib.com manuals search engine

Conducted paths are created by the wires connected to the controller. These wires act as antennas and the amount of RF energy coupled into them is generally proportional to their length. The RF voltages and currents induced in each wire are applied to the controller pin to which the wire is connected. Curtis controllers include bypass capacitors on the printed circuit board's throttle wires to reduce the impact of this RF energy on the internal circuitry. In some applications, additional filtering in the form of ferrite beads may also be required on various wires to achieve desired performance levels.

Radiated paths are created when the controller circuitry is immersed in an external field. This coupling can be reduced by placing the controller as far as possible from the noise source or by enclosing the controller in a metal box. Some Curtis controllers are enclosed by a heatsink that also provides shielding around the controller circuitry, while others are partially shielded or unshielded. In some applications, the vehicle designer will need to mount the controller within a shielded box on the end product. The box can be constructed of just about any metal, although steel and aluminum are most commonly used.

Most coated plastics do not provide good shielding because the coatings are not true metals, but rather a mixture of small metal particles in a non-conductive binder. These relatively isolated particles may appear to be good based on a dc resistance measurement but do not provide adequate electron mobility to yield good shielding effectiveness. Electroless plating of plastic will yield a true metal and can thus be effective as an RF shield, but it is usually more expensive than the coatings.

A contiguous metal enclosure without any holes or seams, known as a Faraday cage, provides the best shielding for the given material and frequency. When a hole or holes are added, RF currents flowing on the outside surface of the shield must take a longer path to get around the hole than if the surface was contiguous. As more "bending" is required of these currents, more energy is coupled to the inside surface, and thus the shielding effectiveness is reduced. The reduction in shielding is a function of the longest linear dimension of a hole rather than the area. This concept is often applied where ventilation is necessary, in which case many small holes are preferable to a few larger ones.

Applying this same concept to seams or joints between adjacent pieces or segments of a shielded enclosure, it is important to minimize the open length of these seams. Seam length is the distance between points where good ohmic contact is made. This contact can be provided by solder, welds, or pressure contact. If pressure contact is used, attention must be paid to the corrosion characteristics of the shield material and any corrosion-resistant processes applied to the base material. If the ohmic contact itself is not continuous, the shielding effectiveness can be maximized by making the joints between adjacent pieces overlapping rather than abutted.

The shielding effectiveness of an enclosure is further reduced when a wire passes through a hole in the enclosure; RF energy on the wire from an external field is re-radiated into the interior of the enclosure. This coupling mechanism can be reduced by filtering the wire where it passes through the shield boundary.

Downloaded from www.Manualslib.com manuals search engine

Given the safety considerations involved in connecting electrical components to the chassis or frame in battery powered vehicles, such filtering will usually consist of a series inductor (or ferrite bead) rather than a shunt capacitor. If a capacitor is used, it must have a voltage rating and leakage characteristics that will allow the end product to meet applicable safety regulations.

The B+ (and B-, if applicable) wires that supply power to a control panel should be bundled with the other control wires to the panel so that all these wires are routed together. If the wires to the control panel are routed separately, a larger loop area is formed. Larger loop areas produce more efficient antennas which will result in decreased immunity performance.

Keep all low power I/O separate from the motor and battery leads. When this is not possible, cross them at right angles.

ELECTROSTATIC DISCHARGE (ESD)

Curtis motor controllers contain ESD-sensitive components, and it is therefore necessary to protect them from ESD (electrostatic discharge) damage. Most of the control lines have protection for moderate ESD events, but must be protected from damage if higher levels exist in a particular application.

ESD immunity is achieved either by providing sufficient distance between conductors and the ESD source so that a discharge will not occur, or by providing an intentional path for the discharge current such that the circuit is isolated from the electric and magnetic fields produced by the discharge. In general the guidelines presented above for increasing radiated immunity will also provide increased ESD immunity.

It is usually easier to prevent the discharge from occurring than to divert the current path. A fundamental technique for ESD prevention is to provide adequately thick insulation between all metal conductors and the outside environment so that the voltage gradient does not exceed the threshold required for a discharge to occur. If the current diversion approach is used, all exposed metal components must be grounded. The shielded enclosure, if properly grounded, can be used to divert the discharge current; it should be noted that the location of holes and seams can have a significant impact on ESD suppression. If the enclosure is not grounded, the path of the discharge current becomes more complex and less predictable, especially if holes and seams are involved. Some experimentation may be required to optimize the selection and placement of holes, wires, and grounding paths. Careful attention must be paid to the control panel design so that it can tolerate a static discharge.

MOV, transorbs, or other devices can be placed between B- and offending wires, plates, and touch points if ESD shock cannot be otherwise avoided.

Downloaded from www.Manualslib.com manuals search engine

APPENDIX B

EN13849 COMPLIANCE

Since January 1, 2012, conformance to the European Machinery Directive has required that the Safety Related Parts of the Control System (SRPCS) be designed and verified upon the general principles outlined in EN13849. EN13849 supersedes the EN954 standard and expands upon it by requiring the determination of the safety Performance Level (PL) as a function of Designated Architecture plus Mean Time To Dangerous Failure (MTTFd), Common Cause Faults (CCF), and Diagnostic Coverage (DC). These figures are used by the OEM to calculate the overall PL for each of the safety functions of their vehicle or machine.

The OEM must determine the hazards that are applicable to their vehicle design, operation, and environment. Standards such as EN13849-1 provide guidelines that must be followed in order to achieve compliance. Some industries have developed further standards (called type-C standards) that refer to EN13849 and specifically outline the path to regulatory compliance. EN1175-1 is a type-C standard for battery-powered industrial trucks. Following a type-C standard provides a presumption of conformity to the Machinery Directive.

Curtis Enhanced AC Motor Controllers comply with these directives using advanced active supervisory techniques. The basic "watchdog" test circuits have been replaced with a Supervisor microcontroller that continuously tests the safety related parts of the control system; see the simplified block diagram in Figure B-1.

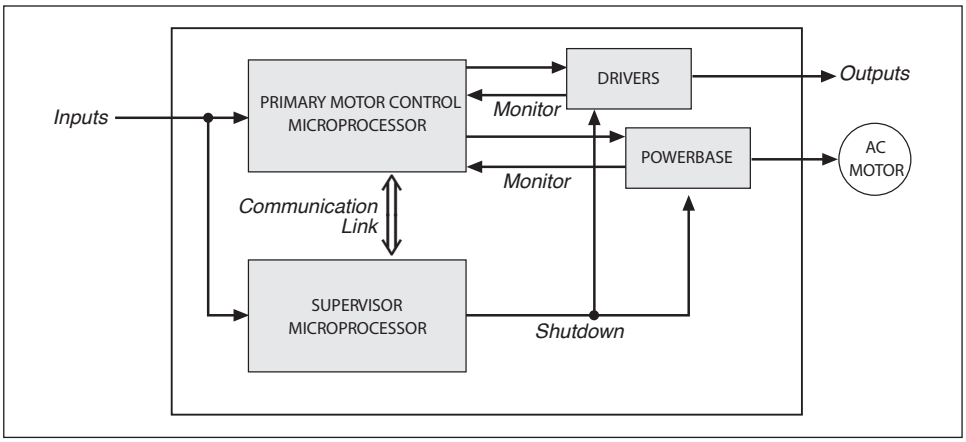

Fig. B-1 *Supervisory system in Curtis enhanced AC motor controllers.*

The Supervisor and Primary motor control processors run diagnostic checks at startup and continuously during operation. At startup, the integrity of the code and EEPROM are ensured through CRC checksum calculations. RAM is pattern checked for proper read, write, and addressing. During operation, the arithmetic and logic processing unit of each micro is cyclically tested through dynamic stimulus and response. The operating system timing and task sequencing are continuously verified. Redundant input measurements are crosschecked over 30 times per second, and operational status information is passed between microprocessors to keep the system synchronized. Any faults

Downloaded from www.Manualslib.com manuals search engine

in these startup tests, communication timing, crosschecks, or responses will command a safe shutdown of the controller, disabling the driver outputs and motor drive within 200 ms.

To mitigate the hazards typically found in machine operations, EN13849 requires that safety functions be defined; these must include all the input, logic, outputs, and power circuits that are involved in any potentially hazardous operation. Two safety functions are defined for Curtis Enhanced AC Motor Controllers: Uncommanded Powered Motion and Motor Braking Torque.

The Uncommanded Powered Motion safety function provides detection and safe shutdown in the following circumstances: faulted throttle; improper sequence of forward/reverse switches, throttle, and interlock; incorrect direction of travel; loss of speed control or limiting; uncommanded movement; or movement at startup. The Braking Torque safety function provides detection and safe shutdown in the event of the loss of braking torque, position/hill hold, or emergency reverse.

Curtis has analyzed each safety function and calculated its Mean Time To Dangerous Failure (MTTFd) and Diagnostic Coverage (DC), and designed them against Common Cause Faults (CCF). The safety-related performance of the 1232E controller is summarized as follows:

Safety Function	Designated Architecture	MTTFd	DC	CCF	PL
Uncommanded Powered Motion	2	>40 yrs	>90%	Pass	d
Motor Braking Torque	2	>16 yrs	>90%	Pass	c

EN1175 specifies that traction and hydraulic electronic control systems must use Designated Architecture 2 or greater. This design employs input, logic, and output circuits that are monitored and tested by independent circuits and software to ensure a high level of safety performance (up to PL=d).

Mean Time To Dangerous Failure (MTTFd) is related to the expected reliability of the safety related parts used in the controller. Only failures that can result in a dangerous situation are included in the calculation.

Diagnostic Coverage (DC) is a measure of the effectiveness of the control system's self-test and monitoring measures to detect failures and provide a safe shutdown.

Common Cause Faults (CCF) are so named because some faults within a controller can affect several systems. EN13849 provides a checklist of design techniques that should be followed to achieve sufficient mitigation of CCFs. The CCF value is a pass/fail criterion.

Performance Level (PL) categorizes the quality or effectiveness of a safety channel to reduce the potential risk caused by dangerous faults within the system with "a" being the lowest and "e" being the highest achievable performance.

Downloaded from www.Manualslib.com manuals search engine

APPENDIX C
PROGRAMMING DEVICES

Curtis programmers provide programming, diagnostic, and test capabilities for the controller. The power for operating the programmer is supplied by the host controller via a 4-pin connector. When the programmer powers up, it gathers information from the controller.

Two types of programming devices are available: the 1314 PC Programming Station and the 1313 handheld programmer. The Programming Station has the advantage of a large, easily read screen; on the other hand, the handheld programmer (with its 45×60mm screen) has the advantage of being more portable and hence convenient for making adjustments in the field.

Both programmers are available in User, Service, Dealer, and OEM versions. Each programmer can perform the actions available at its own level and the levels below that—a User-access programmer can operate at only the User level, whereas an OEM programmer has full access.

PC PROGRAMMING STATION (1314)

The Programming Station is an MS-Windows 32-bit application that runs on a standard Windows PC. Instructions for using the Programming Station are included with the software.

HANDHELD PROGRAMMER (1313)

The 1313 handheld programmer is functionally equivalent to the PC Programming Station; operating instructions are provided in the 1313 manual. This programmer replaces the 1311, an earlier model with fewer functions.

PROGRAMMER FUNCTIONS

Programmer functions include:

Parameter adjustment — provides access to the individual programmable parameters.

Monitoring — presents real-time values during vehicle operation; these include all inputs and outputs.

Diagnostics and troubleshooting — presents diagnostic information, and also a means to clear the fault history file.

Programming — allows you to save/restore custom parameter settings.

Favorites — allows you to create shortcuts to your frequently-used adjustable parameters and monitor variables.

Downloaded from www.Manualslib.com manuals search engine

APPENDIX D

SPECIFICATIONS

Table D-1 SPECIFICATIONS: 1232E/SE, 1234E/SE, 1236E/SE, 1238E CONTROLLERS

Nominal input voltage: 24 V, 24–36 V, 36–48 V, 48–80 V, 72–96 V

NOMINAL VOLTAGE	MINIMUM VOLTAGE	MAXIMUM VOLTAGE	BROWNOUT VOLTAGE)
24 V	14 V	30 V	12 V
24–36 V	16.8 V	45 V	15 V
36–48 V	25.2 V	60 V	20 V
48–80 V	33.6 V	105 V	20 V
72–96 V	50.4 V	120 V	30 V

PWM operating frequency: 10 kHz

Maximum encoder frequency: 10 kHz

Maximum controller output frequency: 450 Hz

Electrical isolation to heatsink: 500 V ac (minimum)

Storage ambient temperature range: -40°C to 95°C (-40°F to 203°F)

Operating ambient temp. range: -40°C to 50°C (-40°F to 122°F)

Thermal cutback: Controller linearly reduces maximum current limit with an internal heatsink temperature from 85°C (185°F) to 95°C (203°F); complete cutoff occurs above 95°C (203°F) and below -40°C (-40°F)

Design life: *1238E-75XX and 1238E-76XX:* 5,000 hours
All other models: 20,000 hours

Operating duration at maximum current: 2 minutes minimum (unless otherwise noted), with initial temperature of 25°C and no additional external heatsink

Package environmental rating: IP65 per IEC529; compliance requires AMPSEAL 35-pin connector header

Weight:
1232E: 1.70 kg *1232SE:* 1.92 kg
1234E: 2.84 kg *1234SE:* 3.12 kg
1236E: 4.12 kg *1236SE:* 3.79 kg
1238E: 6.82 kg

Dimensions, W×L×H:
1232E: 140 × 180 × 71 mm *1232SE:* 140 × 180 × 74 mm
1234E: 155 × 212 × 75 mm *1234SE:* 155 × 212 × 79 mm
1236E: 165 × 232 × 85 mm *1236SE:* 165 × 232 × 85 mm
1238E: 275 × 232 × 85 mm

EMC: Designed to the requirements of EN 12895:2000

Safety: Designed to the requirements of EN 1175-1:1998 + A1:2010 and EN 13849-1:2008 Category 2

UL: UL recognized component per UL583

Note: Regulatory compliance of the complete vehicle system with the controller installed is the responsibility of the OEM.

Downloaded from www.Manualslib.com manuals search engine

Table D-1 SPECIFICATIONS, cont'd

MODEL CHART

MODEL NUMBER	NOMINAL BATTERY VOLTAGE (V)	MAXIMUM CURRENT (A)	S2–60 MINUTE CONTINUOUS CURRENT (A)	CONTINUOUS CURRENT FOR DESIGN LIFE (A)
1232E-21XX	24	180	90	80
1232E-23XX	24	250	125	100
1232E-51XX	36–48	150	75	79
1232E-52XX	36–48	200	100	90
1232E-62XX	48–80	175	80	45
1232E-72XX	72–96	175	80	tbd
1234E-23XX	24	350	175	160
1234E-52XX	36–48	275	135	90
1234E-53XX	36–48	350	175	90
1234E-62XX	48–80	250	110	60
1236E-44XX	24–36	400	175	175
1236E-45XX	24–36	500	240	210
1236E-54XX	36–48	450	205	210
1236E-55XX	36–48	550	250	140
1236E-64XX	48–80	350 (1 min)	100	100
1238E-46XX	24–36	650	300	325
1238E-48XX	24–36	800	355	365
1238E-56XX	36–48	650	295	325
1238E-64XX	48–80	450	155	175
1238E-65XX	48–80	550	190	175
1238E-66XX	48–80	650 (1 min)	195	175
1238E-75XX	72–96	550	175	175
1238E-76XX	72–96	650	200	175
1232SE-24XX	24	375	185	160
1232SE-53XX	36–48	350	175	160
1234SE-45XX	24–36	500	235	210
1234SE-54XX	36–48	450	215	210
1236SE-46XX	24–36	650	285	220
1236SE-56XX	36–48	600	260	210

Notes: All current ratings are rms values per motor phase.

S2–60 minute current is the typical current achievable before thermal cutback occurs, with an ambient temperature of 25°C and the controller mounted to a 6mm-thick vertical steel plate with 6 km/h (1.7 m/s) airflow perpendicular to the plate.

Continuous current for design life is the maximum long-term current, at an internal heatsink long-term temperature of 70°C (158°F), at which the controller will achieve its design life. These numbers are often calculated for a given application by determining an rms duty cycle current and heatsink temperature. For applications that exceed this, please contact your Curtis distributor or support engineer.

Downloaded from www.Manualslib.com manuals search engine