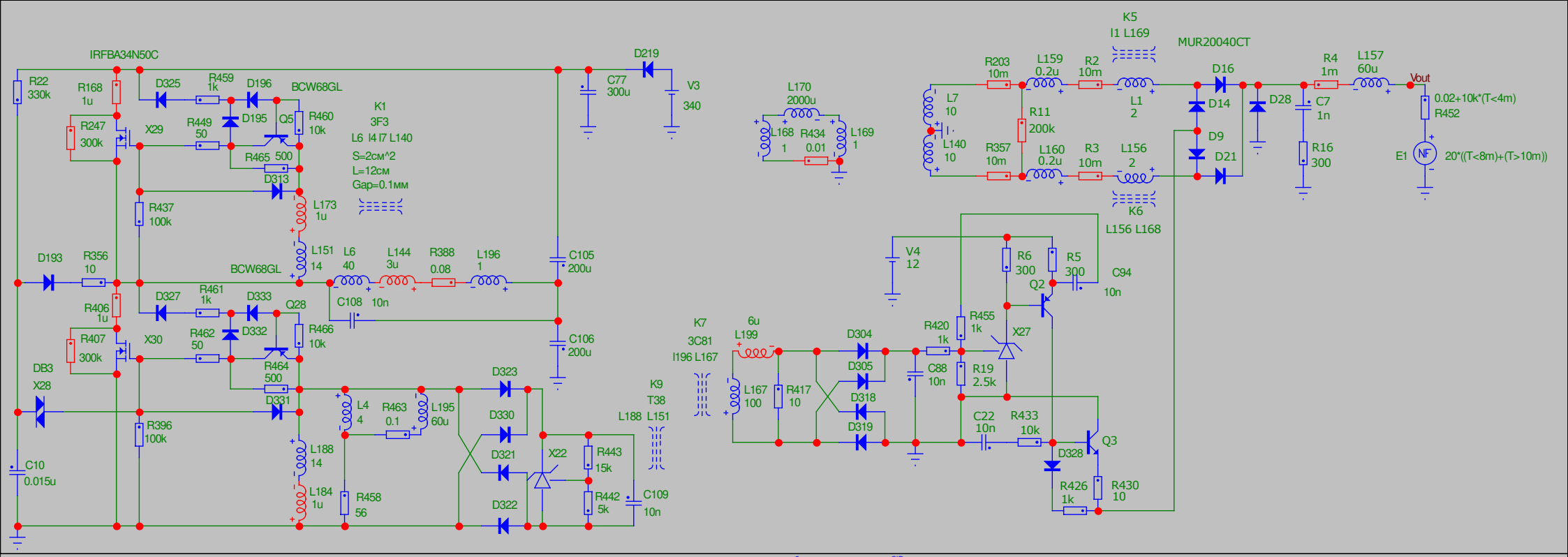
IRFBA34N50C
R22 330k
R168 1u
R247 300k
X29
D325
R459 1k
D196
BCW68GL
D195
R449 50
Q5
R460 10k
R465 500
D313
K1
3F3
L6 I4 I7 L140
S=2см^2
L=12см
Gap=0.1мм
L173 1u
R437 100k
D193
R356 10
L151 14
L6 40
L144 3u
R388 0.08
L196 1
BCW68GL
D327
R461 1k
D333
Q28
R406 1u
R407 300k
X30
R462 50
D332
R466 10k
R464 500
DB3
X28
D331
R396 100k
C10 0.015u
L188 14
L184 1u
L4 4
R463 0.1
L195 60u
R458 56
D323
D330
D321
D322
X22
R443 15k
R442 5k
C109 10n
K9
T38
L188 L151
C77 300u
D219
V3 340
C105 200u
C106 200u
C108 10n
L170 2000u
L168 1
R434 0.01
L169 1
K5
I1 L169
MUR20040CT
R203 10m
L159 0.2u
R2 10m
L7 10
L140 10
R11 200k
R357 10m
L160 0.2u
R3 10m
L156 2
L1 2
D16
D14
D9
D21
D28
R4 1m
L157 60u
Vout
C7 1n
R16 300
0.02+10k*(T<4m)
R452
E1
20*((T<8m)+(T>10m))
K6
L156 L168
V4 12
R6 300
R5 300
Q2
C94 10n
K7
3C81
I196 L167
6u
L199
L167 100
R417 10
D304
D305
D318
D319
R420 1k
C88 10n
R455 1k
X27
R19 2.5k
C22 10n
R433 10k
D328
Q3
R426 1k
R430 10

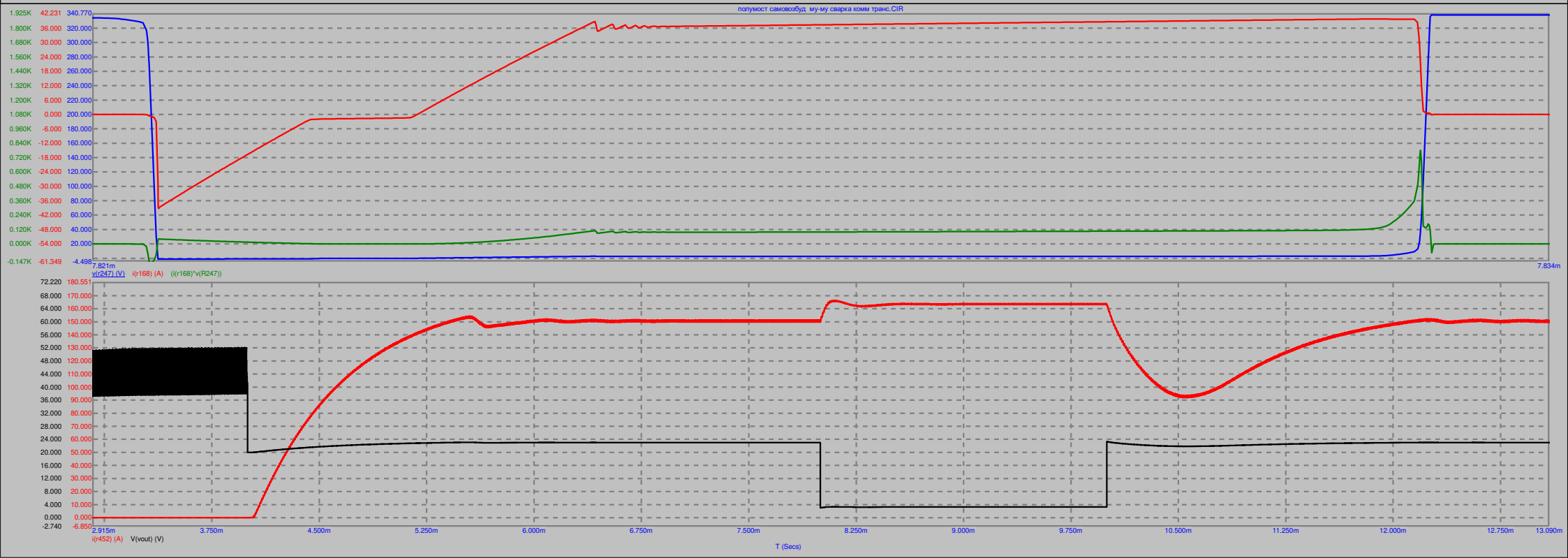
полумост самовозбуд му-му сварка комм транс.CIR
v(r247) (V)
i(r168) (A)
(i(r168)*v(R247))
i(r452) (A)
V(vout) (V)
T (Secs)