CIRCUIT DIAGRAMS

1. SMPS(POWER) CIRCUIT DIAGRAM

IMPORTANT SAFETY NOTICE

WHEN SERVICING THIS CHASSIS, UNDER NO CIRCUMSTANCES SHOULD THE ORIGINAL DESIGN BE MODIFIED OR ALTERED WITHOUT PERMISSION FROM THE LG CORPORATION. ALL COMPONENTS SHOULD BE REPLACED ONLY WITH TYPES IDENTICAL TO THOSE IN THE ORIGINAL CIRCUIT. SPECIAL COMPONENTS ARE SHADED ON THE SCHEMATIC FOR EASY IDENTIFICATION.
THIS CIRCUIT DIAGRAM MAY OCCASIONALLY DIFFER FROM THE ACTUAL CIRCUIT USED. THIS WAY, IMPLEMENTATION OF THE LATEST SAFETY AND PERFORMANCE IMPROVEMENT CHANGES INTO THE SET IS NOT DELAYED UNTIL THE NEW SERVICE LITERATURE IS PRINTED.

NOTE :
1. Shaded(▥) parts are critical for safety. Replace only with specified part number.
2. Voltages are DC-measured with a digital voltmeter during Play mode.

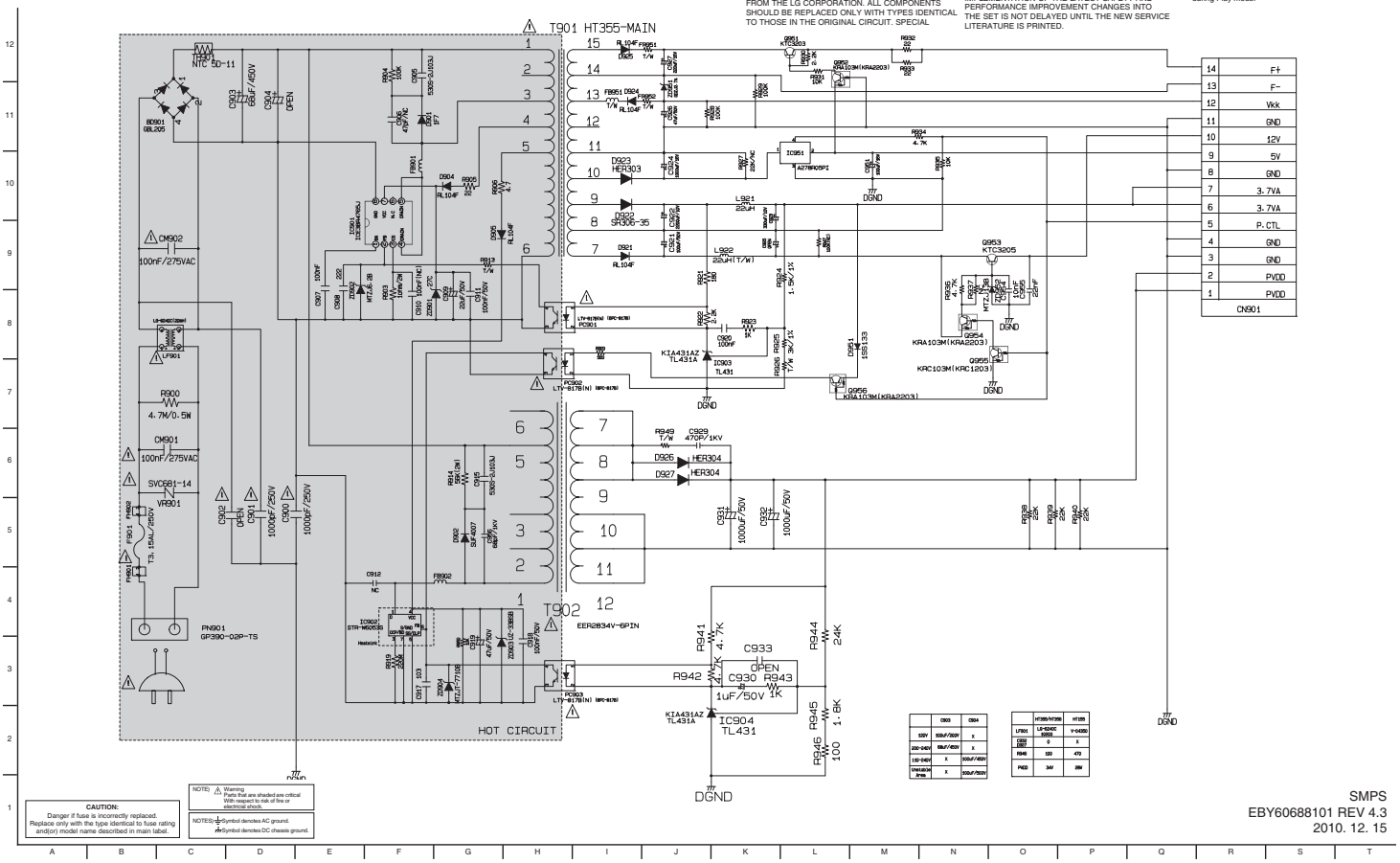

Copyright © 2011 LG Electronics Inc. All right reserved.
Only for training and service purposes.

LGE Internal Use Only

Downloaded from www.Manualslib.com manuals search engine