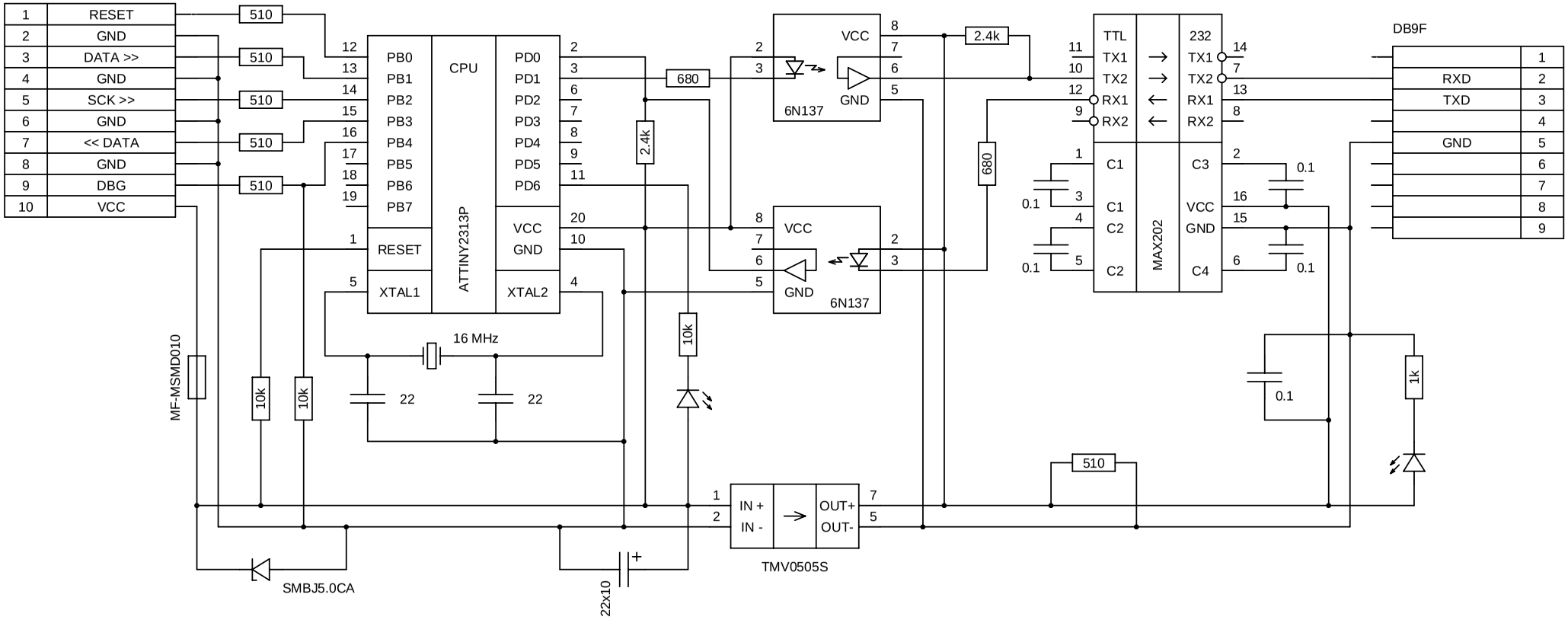
1 RESET
2 GND
3 DATA >>
4 GND
5 SCK >>
6 GND
7 << DATA
8 GND
9 DBG
10 VCC
510
PB0
PB1
PB2
PB3
PB4
PB5
PB6
PB7
RESET
XTAL1
CPU
ATTINY2313P
PD0
PD1
PD2
PD3
PD4
PD5
PD6
VCC
GND
XTAL2
16 MHz
22
22
10k
10k
10k
2.4k
680
6N137
VCC
GND
2.4k
680
TTL
TX1
TX2
RX1
RX2
C1
C1
C2
C2
MAX202
232
TX1
TX2
RX1
RX2
C3
VCC
GND
C4
0.1
0.1
0.1
0.1
0.1
DB9F
RXD
TXD
GND
1k
510
IN +
IN -
OUT+
OUT-
TMV0505S
MF-MSMD010
SMBJ5.0CA
22x10